COMUNE DI RAMACCA

Provincia di Catania

REALIZZAZIONE DI INTERVENTI DI MESSA IN SICUREZZA E RIQUALIFICAZIONE DEL *"PLESSO SCOLASTICO DI VIA DEI CAPPUCCINI"*

PROGETTO STRUTTURALE

ELABORATO: Tabulato di calcolo

Progettazione

PROGEN engineering

Prof. Ing. Fabio Neri

Il RUP

VISTI E AUTORIZZAZIONI

ELABORATO

S

ALL.01

SCALA	
DATA	05-2019
PROG.	
COLLAB.	
FILE	

LE INFORMAZIONI CONTENUTE NEL PRESENTE DOCUMENTO SONO DI NATURA RISERVATA E DI ESCLUSIVA PROPRIETA' DELLA PROGEN S.r.l. E' FATTO ESPRESSO DIVIETO AL DESTINATARIO DEL PRESENTE DOCUMENTO:
1. DI COPIARE, RISTAMPARE O RIPRODURRE IN ALTRO MODO LE INFORMAZIONI O ANCHE SOLO UNA PARTE DELLE STESSE;
2. DI FORNIRE, RIVELARE, DIVULGARE, ASSEGNARE O METTERE IN QUALSIASI ALTRO MODO A DISPOSIZIONE LE INFORMAZIONI, O PARTE DELLE STESSE, AI SUOI DIPENDENTI, FATTA ECCEZIONE PER QUELLI CHE RISULTANO PREPOSTI ALLA GESTIONE DEL DOCUMENTO, O A TERZI.
IL DESTINATARIO DEL PRESENTE DOCUMENTO DOVRA' ALTRESI' PRENDERE TUTTE LE RAGIONEVOLI PRECAUZIONI PER PREVENIRE QUALSIASI RIPRODUZIONE, DIVULGAZIONE OD UTILIZZO DELLE INFORMAZIONI PER SCOPI DIVERSI DA QUELLI PREVISTI IN RELAZIONE ALLA NATURA E ALLE FINALITA' DEL DOCUMENTO, NONCHE' QUALSIASI ACQUISIZIONE DELLE INFORMAZIONI DA PARTE DI PERSONE NON AUTORIZZATE.

PROVINCIA DI CATANIA

COMUNE DI RAMACCA

REALIZZAZIONE DI INTERVENTI DI MESSA IN SICUREZZA E RIQUALIFICAZIONE DEL "PLESSO SCOLASTICO DI VIA DEI CAPPUCCINI"

CORPO AULE

INTERVENTO DI ADEGUAMENTO SISMICO

All.1 - Tabulato di calcolo

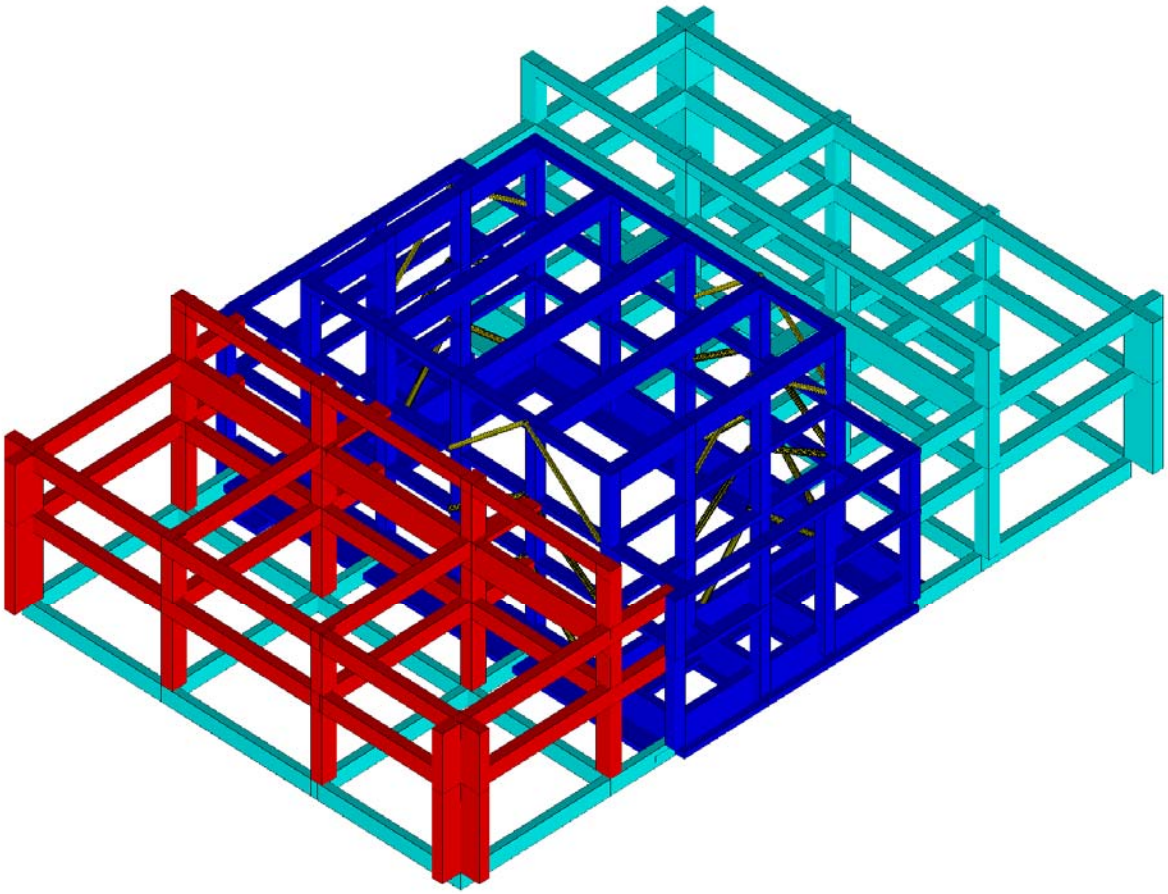

INDICE

TABULATO DI CALCOLO STRUTTURALE 3
Modellazione della geometria e proprietà meccaniche: 3
Tipo di vincoli: 3
CARATTERISTICHE MATERIALI UTILIZZATI 4
LEGENDA TABELLA DATI MATERIALI 4
MODELLAZIONE DELLE SEZIONI 10
LEGENDA TABELLA DATI SEZIONI 10
MODELLAZIONE STRUTTURA: NODI 13
LEGENDA TABELLA DATI NODI 13
TABELLA DATI NODI 13
MODELLAZIONE STRUTTURA: ELEMENTI TRAVE 15
TABELLA DATI TRAVI 15
MODELLAZIONE DELLA STRUTTURA: ELEMENTI SOLAIO-PANNELLO 22
LEGENDA TABELLA DATI SOLAI-PANNELLI 22
MODELLAZIONE DELLE AZIONI 25
LEGENDA TABELLA DATI AZIONI 25
SCHEMATIZZAZIONE DEI CASI DI CARICO 28
LEGENDA TABELLA CASI DI CARICO 28
DEFINIZIONE DELLE COMBINAZIONI 30
LEGENDA TABELLA COMBINAZIONI DI CARICO 30
AZIONE SISMICA 32
VALUTAZIONE DELL' AZIONE SISMICA 32
Parametri della struttura 32
RISULTATI ANALISI SISMICHE 33
LEGENDA TABELLA ANALISI SISMICHE 33
RISULTATI NODALI 43
LEGENDA RISULTATI NODALI 43
RISULTATI OPERE DI FONDAZIONE 163
LEGENDA RISULTATI OPERE DI FONDAZIONE 163
VERIFICHE ELEMENTI TRAVE C.A. 181
LEGENDA TABELLA VERIFICHE ELEMENTI TRAVE C.A. 181
PROGETTAZIONE DELLE STRUTTURE DI NUOVA REALIZZAZIONE 183
VERIFICA STRUTTURE ESISTENTI 186

TABULATO DI CALCOLO STRUTTURALE

Modellazione della geometria e proprietà meccaniche:	
nodi	140
elementi D2 (per aste, travi, pilastri…)	309
elementi D3 (per pareti, platee, gusci…)	0
elementi solaio	44
elementi solidi	0
Dimensione del modello strutturale [cm]:	
X min =	386.00
Xmax =	2380.00
Ymin =	197.00
Ymax =	3211.00
Zmin =	-65.00
Zmax =	1055.00
Strutture verticali:	
Elementi di tipo asta	NO
Pilastri	SI
Pareti	NO
Setti (a comportamento membranale)	NO
Strutture non verticali:	
Elementi di tipo asta	SI
Travi	SI
Gusci	NO
Membrane	NO
Orizzontamenti:	
Solai con la proprietà piano rigido	SI
Solai senza la proprietà piano rigido	NO
Tipo di vincoli:	
Nodi vincolati rigidamente	SI
Nodi vincolati elasticamente	NO

Nodi con isolatori sismici	NO
Fondazioni puntuali (plinti/plinti su palo)	SI
Fondazioni di tipo trave	SI
Fondazioni di tipo platea	NO
Fondazioni con elementi solidi	NO

Combinazioni dei casi di carico	
APPROCCIO PROGETTUALE	Approccio 2
Tensioni ammissibili	NO
SLU	SI
SLV (SLU con sisma)	SI
SLC	NO
SLD	SI
SLO	NO
SLU GEO A2 (per approccio 1)	NO
SLU EQU	NO
Combinazione caratteristica (rara)	NO
Combinazione frequente	NO
Combinazione quasi permanente (SLE)	NO
SLA (accidentale quale incendio)	NO

CARATTERISTICHE MATERIALI UTILIZZATI

LEGENDA TABELLA DATI MATERIALI

Il programma consente l'uso di materiali diversi. Sono previsti i seguenti tipi di materiale:

1	materiale tipo cemento armato
2	materiale tipo acciaio
3	materiale tipo muratura
4	materiale tipo legno
5	materiale tipo generico

I materiali utilizzati nella modellazione sono individuati da una sigla identificativa ed un codice numerico (gli elementi strutturali richiamano quest'ultimo nella propria descrizione). Per ogni materiale vengono riportati in tabella i seguenti dati:

Young	modulo di elasticità normale
Poisson	coefficiente di contrazione trasversale
G	modulo di elasticità tangenziale
Gamma	peso specifico

Alfa	coefficiente di dilatazione termica

I dati soprariportati vengono utilizzati per la modellazione dello schema statico e per la determinazione dei carichi inerziali e termici. In relazione al tipo di materiale vengono riportati inoltre:

1	***cemento armato***		
		Rck	resistenza caratteristica cubica
		Fctm	resistenza media a trazione semplice
2	***acciaio***		
		Ft	tensione di rottura a trazione
		Fy	tensione di snervamento
		Fd	resistenza di calcolo
		Fdt	resistenza di calcolo per spess. t>40 mm
		Sadm	tensione ammissibile
		Sadmt	tensione ammissibile per spess. t>40 mm
3	***muratura***		
		Resist. Fk	resistenza caratteristica a compressione
		Resist. Fvko	resistenza caratteristica a taglio
4	***legno***		
		Resist. fc0k	Resistenza caratteristica (tensione amm. per REGLES) per compressione
		Resist. ft0k	Resistenza caratteristica (tensione amm. per REGLES) per trazione
		Resist. fmk	Resistenza caratteristica (tensione amm. per REGLES) per flessione
		Resist. fvk	Resistenza caratteristica (tensione amm. per REGLES) per taglio
		Modulo E0,05	Modulo elastico parallelo caratteristico
		Lamellare	lamellare o massiccio

Vengono inoltre riportate le tabelle conteneti il riassunto delle nformazioni assegnate nei criteri di progetto in uso.

Con riferimento al **Documento di Affidabilità** "*Test di validazione del software di calcolo PRO_SAP e dei moduli aggiuntivi PRO_SAP Modulo Geotecnico, PRO_CAD nodi acciaio e PRO_MST*" - versione Maggio 2011, disponibile per il download sul sito **www.2si.it**, si segnalano i seguenti esempi applicativi:

Modellazione di strutture in c.a.

Test N°	Titolo
41	GERARCHIA DELLE RESISTENZE PER TRAVI IN C.A.
42	GERARCHIA DELLE RESISTENZE PER PILASTRI IN C.A.
43	VERIFICA ALLE TA DI STRUTTURE IN C.A.
44	VERIFICA AGLI SLU DI STRUTTURE IN C.A.
45	VERIFICA A PUNZONAMENTO ALLO SLU DI PIASTRE IN C.A.
46	VERIFICA A PUNZONAMENTO ALLO SLU DI TRAVI IN C.A.
47	PROGETTAZIONE A TAGLIO DI STRUTTURE IN C.A. SECONDO IL D.M. 9/1/96
48	PROGETTAZIONE A TAGLIO DI STRUTTURE IN C.A. SECONDO IL D.M. 14/1/2008
49	VERIFICA ALLO SLE (TENSIONI E FESSURAZIONE) DI STRUTTURE IN C.A.
50	VERIFICA ALLO SLE (DEFORMAZIONE) DI STRUTTURE IN C.A.
51	FATTORE DI STRUTTURA
52	SOVRARESISTENZE
53	DETTAGLI COSTRUTTIVI C.A.: LIMITI D'ARMATURA PILASTRI E NODI TRAVE-PILASTRO
54	PARETI IN C.A. SNELLE IN ZONA SISMICA
80	ANALISI PUSHOVER DI UN EDIFICIO IN C.A.
120	PROGETTO E VERIFICA DI TRAVI PREM

Modellazione di strutture in acciaio

Test N°	Titolo
55	VERIFICA DI STABILITA' DI ASTE COMPRESSE IN ACCIAIO – METODO OMEGA
56	LUCE LIBERA DI TRAVI E ASTE IN ACCIAIO
57	LUCE LIBERA DI COLONNE IN ACCIAIO
58	SVERGOLAMENTO DI TRAVI IN ACCIAIO
59	FATTORE DI STRUTTURA
60	ACCIAIO D.M.2008
61	ACCIAIO EC3
62	GERARCHIA RESISTENZE STRUTTURE IN ACCIAIO

63	STABILITA' DI ASTE COMPOSTE IN ACCIAIO
73	COLLEGAMENTI IN ACCIAIO: NODO TRAVE COLONNA FLANGIATO CON PRESENZA IRRIGIDIMENTI TRASVERSALI
74	COLLEGAMENTI IN ACCIAIO: NODO TRAVE COLONNA FLANGIATO CON PRESENZA DI UN PIATTO DI RINFORZO SALDATO ALL'ANIMA DELLA COLONNA
75	COLLEGAMENTI IN ACCIAIO: NODO TRAVE COLONNA FLANGIATO CON PRESENZA DI DUE PIATTI DI RINFORZO SALDATI ALL'ANIMA DELLA COLONNA
76	COLLEGAMENTI IN ACCIAIO: NODO TRAVE COLONNA FLANGIATO A DUE VIE SU ALI COLONNA
77	COLLEGAMENTI IN ACCIAIO: NODO TRAVE COLONNA FLANGIATO A UNA VIA CON DUE COMBINAZIONI DI CARICO
78	COLLEGAMENTI IN ACCIAIO: NODO TRAVE COLONNA FLANGIATO SU ANIMA SENZA RINFORZI A QUATTRO FILE DI BULLONI DI CUI UNA SU PIASTRA INFERIORE E UNA SU PIASTRA SUPERIORE
79	VERIFICA DELLA PIASTRA NODO TRAVE COLONNA
85	TELAIO ACCIAIO: CONTROVENTI CONCENTRICI

Modellazione di strutture in muratura

Test N°	Titolo
81	ANALISI PUSHOVER DI UNA STRUTTURA IN MURATURA
84	ANALISI ELASTO PLASTICA INCREMENTALE, PARETE IN MURATURA
86	VERIFICA NON SISMICA DELLE MURATURE (D.M. 87 TA)
87	VERIFICA NON SISMICA DELLE MURATURE (D.M. 2005 SL)
88	FATTORE DI STRUTTURA

Modellazione di strutture in legno

Test N°	Titolo
17	SOLAIO: MISTO LEGNO-CALCESTRUZZO
89	VERIFICA ALLO SLU DI STRUTTURE IN LEGNO SECONDO EC5
90	VERIFICA ALLO SLE DI STRUTTURE IN LEGNO SECONDO EC5
91	FATTORE DI STRUTTURA
92	VERIFICHE EC5
93	SNELLEZZE EC5

94	VERIFICA AL FUOCO DI STRUTTURE IN LEGNO SECONDO EC5
117	PROGETTO E VERIFICA DI GUSCI IN MATERIALE XLAM
118	PROGETTO E VERIFICA DI PARETI IN MATERIALE XLAM E RELATIVI COLLEGAMENTI
119	PROGETTO E VERIFICA DI SOLAI IN MATERIALE XLAM

Id	Tipo / Note		Young	Poisson	G	Gamma	Alfa
		N/mm2	N/mm2		N/mm2	N/mm3	
1	c.a. classe = 200.00		2.86e+04	0.12	1.289e+04	2.50e-05	1.00e-05
	Rck	20.0					
	fctm	2.6					
3	c.a. classe 30		3.14e+04	0.12	1.394e+04	2.50e-05	1.00e-05
	Rck	30.0					
	fctm	2.6					
4	c.a. classe 35		3.23e+04	0.12	1.505e+04	2.50e-05	1.00e-05
	Rck	35.0					
	fctm	2.9					
30	cont p1-xy		1.450e+05	0.30	8.077e+04	7.85e-05	1.00e-05
	ft	430.0					
	fy	46.1					
31	cont p2-xy		3.900e+04	0.30	8.077e+04	7.85e-05	1.00e-05
	ft	430.0					
	fy	22.8					
32	cont p3-xy		7.100e+04	0.30	8.077e+04	7.85e-05	1.00e-05
	ft	430.0					
	fy	44.0					

Aste acc.	1/7/..
Generalità	
Beta assegnato	0.80
Verifica come controvento	No
Usa condizioni I e II	Si
Coefficiente gamma M0	1.05
Coefficiente gamma M1	1.05
Coefficiente gamma M2	1.20

Travi c.a.	1/7/..	2/8/..	3/9/..	4/10/..	5/11/..	6/12/..
Generalità						
Progetta a filo	Si	Si				
Af inf: da q*L*L /	0.0	0.0				
Armatura						
Minima tesa	0.33	0.33				
Minima compressa	0.33	0.33				
Massima tesa	0.81	0.81				
Da sezione	No	No				
Usa armatura teorica	No	No				
Stati limite ultimi						
Tensione fy [N/mm2]	430.00	346.00				
Tensione fy staffe [N/mm2]	430.00	346.00				
Tipo acciaio	tipo C	tipo C				
Coefficiente gamma s	1.15	1.15				
Coefficiente gamma c	1.60	1.60				
Fattore di confidenza FC	0.0	1.2				
Tensione amm. acciaio [N/mm2]	260.00	260.00				
Rapporto omogeneizzazione N	15.00	15.00				
Massimo rapporto area compressa/tesa	1.00	1.00				
Staffe						
Diametro staffe	8.00	8.00				
Passo minimo [cm]	3.00	3.00				

Travi c.a.	1/7/..	2/8/..	3/9/..	4/10/..	5/11/..	6/12/..
Passo massimo [cm]	25.00	25.00				
Passo raffittito [cm]	15.00	15.00				
Lunghezza zona raffittita [cm]	100.00	100.00				
Ctg(Teta) Max	2.50	2.50				
Percentuale sagomati	0.0	0.0				
Luce di taglio per GR [cm]	1.00	1.00				
Adotta scorrimento medio	No	No				
Torsione non essenziale inclusa	No	No				

Pilastri c.a.	1/7/..	2/8/..	3/9/..	4/10/..	5/11/..	6/12/..
Generalità						
Progetto armatura	Privilegia lati	Privilegia lati				
Progetta a filo	Si	Si				
Effetti del 2 ordine	No	No				
Beta per 2-2	1.00	1.00				
Beta per 3-3	1.00	1.00				
Armatura						
Massima tesa	4.00	4.00				
Minima tesa	1.00	1.00				
Stati limite ultimi						
Tensione fy [N/mm2]	430.00	346.00				
Tensione fy staffe [N/mm2]	430.00	346.00				
Tipo acciaio	tipo C	tipo C				
Coefficiente gamma s	1.15	1.15				
Coefficiente gamma c	1.60	1.60				
Fattore di confidenza FC	0.0	1.2				
Verifiche con N costante	No	No				
Staffe						
Diametro staffe	8.00	8.00				
Passo minimo [cm]	5.00	5.00				
Passo massimo [cm]	25.00	20.00				
Passo raffittito [cm]	13.00	15.00				
Lunghezza zona raffittita [cm]	75.00	130.00				
Ctg(Teta) Max	2.50	2.50				
Luce di taglio per GR [cm]	1.00	1.00				
Massimizza gerarchia	Si	Si				

MODELLAZIONE DELLE SEZIONI

LEGENDA TABELLA DATI SEZIONI

Il programma consente l'uso di sezioni diverse. Sono previsti i seguenti tipi di sezione:

1 sezione di tipo generico
2 profilati semplici
3 profilati accoppiati e speciali

Le sezioni utilizzate nella modellazione sono individuate da una sigla identificativa ed un codice numerico (gli elementi strutturali richiamano quest'ultimo nella propria descrizione). Per ogni sezione vengono riportati in tabella i seguenti dati:

Area	area della sezione
A V2	area della sezione/fattore di taglio (per il taglio in direzione 2)
A V3	area della sezione/fattore di taglio (per il taglio in direzione 3)
Jt	fattore torsionale di rigidezza
J2-2	momento d'inerzia della sezione riferito all'asse 2
J3-3	momento d'inerzia della sezione riferito all'asse 3
W2-2	modulo di resistenza della sezione riferito all'asse 2
W3-3	modulo di resistenza della sezione riferito all'asse 3
Wp2-2	modulo di resistenza plastico della sezione riferito all'asse 2
Wp3-3	modulo di resistenza plastico della sezione riferito all'asse 3

I dati sopra riportati vengono utilizzati per la determinazione dei carichi inerziali e per la definizione delle rigidezze degli elementi strutturali; qualora il valore di Area V2 (e/o Area V3) sia nullo la deformabilità per taglio V2 (e/o V3) è trascurata. La valutazione delle caratteristiche inerziali delle sezioni è condotta nel riferimento 2-3 dell'elemento.

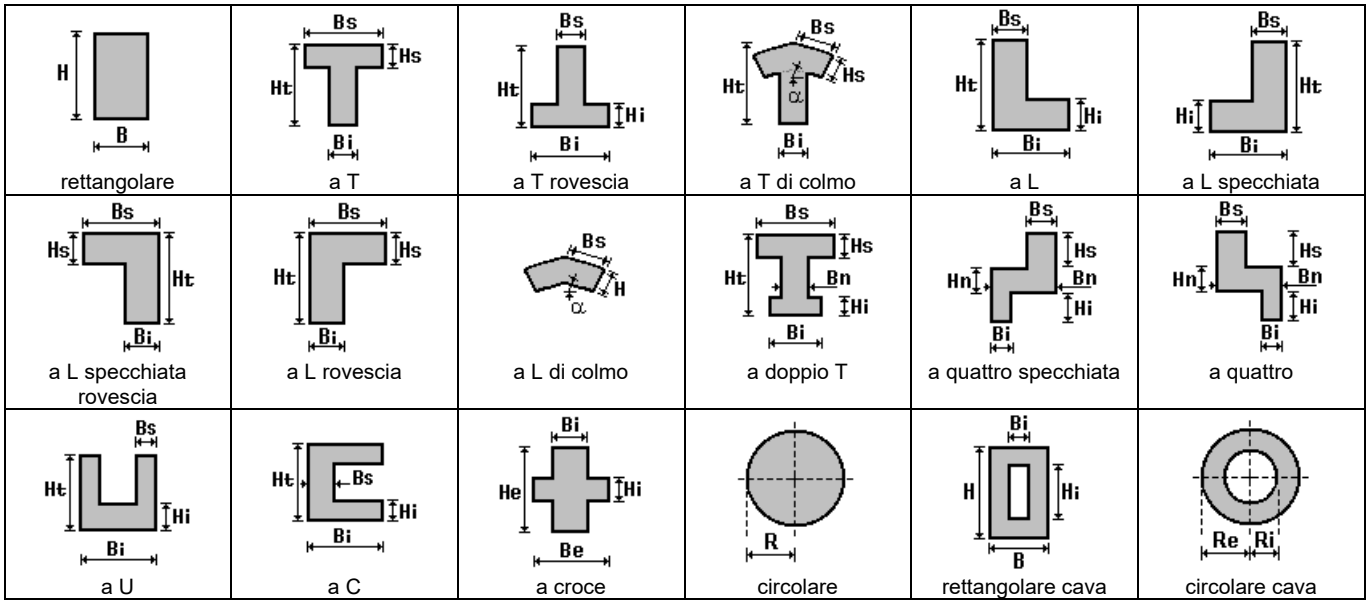

Per quanto concerne i profilati semplici ed accoppiati l'asse 2 del riferimento coincide con l'asse x riportato nei più diffusi profilatari.

Per quanto concerne le sezioni di tipo generico (tipo 1.):
i valori dimensionali con prefisso B sono riferiti all'asse 2
i valori dimensionali con prefisso H sono riferiti all'asse 3

Con riferimento al **Documento di Affidabilità** "*Test di validazione del software di calcolo PRO_SAP e dei moduli aggiuntivi PRO_SAP Modulo Geotecnico, PRO_CAD nodi acciaio e PRO_MST*" - versione Settembre 2014, disponibile per il download sul sito **www.2si.it**, si segnalano i seguenti esempi applicativi:

Test N°	Titolo
1	CARATTERISTICHE GEOMETRICHE E INERZIALI
45	VERIFICA AGLI SLU DI STRUTTURE IN C.A.
48	PROGETTAZIONE A TAGLIO DI STRUTTURE IN C.A. SECONDO IL D.M. 9/1/96
49	PROGETTAZIONE A TAGLIO DI STRUTTURE IN C.A. SECONDO IL D.M. 14/1/2008
50	VERIFICA ALLO SLE (TENSIONI E FESSURAZIONE) DI STRUTTURE IN C.A.
51	VERIFICA ALLO SLE (DEFORMAZIONE) DI STRUTTURE IN C.A.
104	ANALISI DI RESISTENZA AL FUOCO

Id	Tipo	Area	A V2	A V3	Jt	J 2-2	J 3-3	W 2-2	W 3-3	Wp 2-2	Wp 3-3
		cm2	cm2	cm2	cm4	cm4	cm4	cm3	cm3	cm3	cm3
1	L inv.ribas.: bi=46.00 ht=130.00 bs=130.00 hs=46.00	9844.00	0.0	0.0	6.555e+06	1.324e+07	1.324e+07	1.625e+05	1.625e+05	1.950e+05	1.950e+05
6	Rettangolare: b=46.00 h =46.00	2116.00	0.0	0.0	6.294e+05	3.731e+05	3.731e+05	1.622e+04	1.622e+04	2.433e+04	2.433e+04
10	Rettangolare: b=50.00 h =23.00	1150.00	0.0	0.0	1.440e+05	2.396e+05	5.070e+04	9583.33	4408.33	1.437e+04	6612.50
12	Rettangolare: b=46.00 h =23.00	1058.00	0.0	0.0	1.278e+05	1.866e+05	4.664e+04	8111.33	4055.67	1.217e+04	6083.50
15	T rovescia: bi=80.00 ht=155.00 bs=30.00 hi=25.00	5900.00	0.0	0.0	1.560e+06	1.359e+06	1.354e+07	3.398e+04	1.483e+05	4.077e+04	1.780e+05
16	T rovescia: bi=180.00 ht=155.00 bs=30.00 hi=25.00	8400.00	0.0	0.0	2.080e+06	1.244e+07	1.828e+07	1.383e+05	1.716e+05	1.659e+05	2.059e+05
18	Rettangolare: b=46.00 h =30.00	1380.00	0.0	0.0	2.439e+05	2.433e+05	1.035e+05	1.058e+04	6900.00	1.587e+04	1.035e+04
19	Rettangolare: b=46.00 h =87.00	4002.00	0.0	0.0	1.882e+06	7.057e+05	2.524e+06	3.068e+04	5.803e+04	4.602e+04	8.704e+04
20	Rettangolare: b=65.00 h =50.00	3250.00	0.0	0.0	1.438e+06	1.144e+06	6.771e+05	3.521e+04	2.708e+04	5.281e+04	4.062e+04
21	Rettangolare: b=50.00 h =65.00	3250.00	0.0	0.0	1.438e+06	6.771e+05	1.144e+06	2.708e+04	3.521e+04	4.062e+04	5.281e+04
22	Rettangolare: b=40.00 h =70.00	2800.00	0.0	0.0	9.557e+05	3.733e+05	1.143e+06	1.867e+04	3.267e+04	2.800e+04	4.900e+04
23	Rettangolare: b=40.00 h =120.00	4800.00	0.0	0.0	2.022e+06	6.400e+05	5.760e+06	3.200e+04	9.600e+04	4.800e+04	1.440e+05
24	Rettangolare: b=30.00 h =70.00	2100.00	0.0	0.0	4.599e+05	1.575e+05	8.575e+05	1.050e+04	2.450e+04	1.575e+04	3.675e+04
25	Rettangolare: b=70.00 h =23.00	1610.00	0.0	0.0	2.251e+05	6.574e+05	7.097e+04	1.878e+04	6171.67	2.818e+04	9257.50
30	profilo TUB219x12.0 (Section Maker)	77.68	0.0	0.0	8321.55	4157.43	4157.43	379.50	379.50	511.35	511.35
31	TUBO 168.3x8.0	40.29	0.0	0.0	2594.54	1297.27	1297.27	154.16	154.16	205.74	205.74

MODELLAZIONE STRUTTURA: NODI

LEGENDA TABELLA DATI NODI

Il programma utilizza per la modellazione nodi strutturali.
Ogni nodo è individuato dalle coordinate cartesiane nel sistema di riferimento globale (X Y Z).
Ad ogni nodo è eventualmente associato un codice di vincolamento rigido, un codice di fondazione speciale, ed un set di sei molle (tre per le traslazioni, tre per le rotazioni). Le tabelle sottoriportate riflettono le succitate possibilità. In particolare per ogni nodo viene indicato in tabella:

Nodo	numero del nodo.
X	valore della coordinata X
Y	valore della coordinata Y
Z	valore della coordinata Z

Per i nodi ai quali sia associato un codice di vincolamento rigido, un codice di fondazione speciale o un set di molle viene indicato in tabella:

Nodo	numero del nodo.
X	valore della coordinata X
Y	valore della coordinata Y
Z	valore della coordinata Z
Note	eventuale codice di vincolo (es. v=110010 sei valori relativi ai sei gradi di libertà previsti per il nodo TxTyTzRxRyRz, il valore 1 indica che lo spostamento o rotazione relativo è impedito, il valore 0 indica che lo spostamento o rotazione relativo è libero).
Note	(FS = 1, 2,…) eventuale codice del tipo di fondazione speciale (1, 2,… fanno riferimento alle tipologie: plinto, palo, plinto su pali,…) che è collegato al nodo. (ISO = "id SIGLA") indice e sigla identificativa dell' eventuale isolatore sismico assegnato al nodo
Rig. TX	valore della rigidezza dei vincoli elastici eventualmente applicati al nodo, nello specifico TX (idem per TY, TZ, RX, RY, RZ).

TABELLA DATI NODI

Nodo	X	Y	Z	Nodo	X	Y	Z	Nodo	X	Y	Z
	cm	cm	cm		cm	cm	cm		cm	cm	cm
1	1746.0	877.0	995.0	2	386.0	1171.0	755.0	4	2380.0	877.0	995.0
5	386.0	877.0	755.0	6	386.0	197.0	755.0	7	1406.0	1171.0	755.0
8	1746.0	1171.0	755.0	9	2088.0	1171.0	755.0	10	2380.0	1171.0	755.0
11	1066.0	2237.0	1055.0	12	2380.0	1851.0	135.0	13	386.0	1556.0	755.0
15	1066.0	197.0	755.0	16	1746.0	197.0	755.0	19	386.0	877.0	505.0
20	386.0	197.0	505.0	21	1406.0	1171.0	1055.0	22	1746.0	1171.0	1055.0
23	2088.0	1171.0	1055.0	24	726.0	1556.0	1055.0	25	2088.0	1556.0	1055.0
34	1066.0	1171.0	1055.0	35	726.0	1851.0	1055.0	40	726.0	1556.0	755.0
41	2088.0	1556.0	755.0	42	2380.0	1556.0	755.0	43	1746.0	2237.0	1055.0
46	2380.0	1556.0	135.0	48	2088.0	1851.0	1055.0	49	726.0	1171.0	1055.0
50	1066.0	1171.0	755.0	54	2088.0	2237.0	1055.0	56	386.0	1851.0	755.0
57	726.0	1851.0	755.0	58	2088.0	1851.0	755.0	60	726.0	1171.0	755.0
61	2380.0	1851.0	755.0	62	726.0	2237.0	1055.0	63	1406.0	2237.0	1055.0
64	1066.0	197.0	505.0	69	386.0	2237.0	755.0	73	2380.0	2237.0	135.0
74	1746.0	197.0	505.0	75	726.0	2237.0	755.0	76	1066.0	2237.0	755.0
77	2380.0	197.0	505.0	78	1066.0	877.0	505.0	79	1746.0	877.0	505.0
80	1406.0	2237.0	755.0	81	2380.0	877.0	505.0	82	2380.0	197.0	755.0
83	1746.0	2237.0	755.0	84	386.0	1171.0	505.0	85	726.0	1171.0	505.0
86	1066.0	1171.0	505.0	87	1406.0	1171.0	505.0	88	1746.0	1171.0	505.0
89	2088.0	1171.0	505.0	90	2380.0	1171.0	505.0	91	1066.0	877.0	755.0
92	2088.0	2237.0	755.0	93	386.0	1556.0	505.0	94	726.0	1556.0	505.0
95	2088.0	1556.0	505.0	96	2380.0	1556.0	505.0	97	1746.0	877.0	755.0
98	2380.0	2237.0	755.0	99	386.0	1851.0	505.0	100	726.0	1851.0	505.0
101	2088.0	1851.0	505.0	102	2380.0	1851.0	505.0	103	2380.0	877.0	755.0
104	386.0	877.0	995.0	105	386.0	2237.0	505.0	106	726.0	2237.0	505.0
107	1066.0	2237.0	505.0	108	1406.0	2237.0	505.0	109	1746.0	2237.0	505.0
110	2088.0	2237.0	505.0	111	2380.0	2237.0	505.0	112	1066.0	877.0	995.0
113	1066.0	2531.0	995.0	115	386.0	2531.0	995.0	116	2380.0	2531.0	755.0
117	2380.0	3211.0	755.0	119	1746.0	3211.0	755.0	120	1066.0	3211.0	755.0
123	2380.0	2531.0	505.0	124	2380.0	3211.0	505.0	129	1746.0	3211.0	505.0
130	1066.0	3211.0	505.0	131	386.0	3211.0	505.0	132	1746.0	2531.0	505.0
133	1066.0	2531.0	505.0	134	386.0	2531.0	505.0	135	386.0	3211.0	755.0
136	1746.0	2531.0	755.0	137	1066.0	2531.0	755.0	138	386.0	2531.0	755.0
139	2380.0	2531.0	995.0	140	1746.0	2531.0	995.0				

Nodo	X	Y	Z	Note	Rig. TX	Rig. TY	Rig. TZ	Rig. RX	Rig. RY	Rig. RZ
	cm	cm	cm		daN/cm	daN/cm	daN/cm	daN cm/rad	daN cm/rad	daN cm/rad
3	386.0	877.0	135.0	v=111111						
14	386.0	197.0	135.0	v=111111						
17	1066.0	197.0	135.0	v=111111						

18	1746.0	197.0	135.0	v=111111
26	2380.0	197.0	135.0	v=111111
27	386.0	1171.0	135.0	v=111111
28	726.0	1171.0	135.0	v=111111
29	1066.0	1171.0	135.0	v=111111
30	1406.0	1171.0	135.0	v=111111
31	1746.0	1171.0	135.0	v=111111
32	2088.0	1171.0	135.0	v=111111
33	2380.0	1171.0	135.0	v=111111
36	386.0	1556.0	135.0	v=111111
37	1066.0	877.0	135.0	v=111111
38	1746.0	877.0	135.0	v=111111
39	2380.0	877.0	135.0	v=111111
44	726.0	1556.0	135.0	v=111111
45	2088.0	1556.0	135.0	v=111111
47	2380.0	1171.0	-65.0	v=111111
51	386.0	1851.0	135.0	v=111111
52	726.0	1851.0	135.0	v=111111
53	2380.0	1556.0	-65.0	v=111111
55	2088.0	1851.0	135.0	v=111111
59	2380.0	1851.0	-65.0	v=111111
65	386.0	2237.0	135.0	v=111111
66	726.0	2237.0	135.0	v=111111
67	1066.0	2237.0	135.0	v=111111
68	2380.0	2237.0	-65.0	v=111111
70	1406.0	2237.0	135.0	v=111111
71	1746.0	2237.0	135.0	v=111111
72	2088.0	2237.0	135.0	v=111111
114	2380.0	2531.0	135.0	FS=4
118	2380.0	3211.0	135.0	FS=2
121	1746.0	3211.0	135.0	FS=1
122	1066.0	3211.0	135.0	FS=1
125	386.0	3211.0	135.0	FS=2
126	1746.0	2531.0	135.0	FS=3
127	1066.0	2531.0	135.0	FS=3
128	386.0	2531.0	135.0	FS=4

MODELLAZIONE STRUTTURA: ELEMENTI TRAVE

TABELLA DATI TRAVI

Il programma utilizza per la modellazione elementi a due nodi denominati in generale travi.
Ogni elemento trave è individuato dal nodo iniziale e dal nodo finale.
Ogni elemento è caratterizzato da un insieme di proprietà riportate in tabella che ne completano la modellazione.

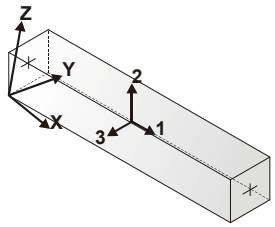

orientamento elementi 2D non verticali

orientamento elementi 2D verticali

In particolare per ogni elemento viene indicato in tabella:

Elem.	numero dell'elemento
Note	codice di comportamento: trave, trave di fondazione, pilastro, asta, asta tesa, asta compressa,
Nodo I (J)	numero del nodo iniziale (finale)
Mat.	codice del materiale assegnato all'elemento
Sez.	codice della sezione assegnata all'elemento
Rotaz.	valore della rotazione dell'elemento, attorno al proprio asse, nel caso in cui l'orientamento di default non sia adottabile; l'orientamento di default prevede per gli elementi non verticali l'asse 2 contenuto nel piano verticale e l'asse 3 orizzontale, per gli elementi verticali l'asse 2 diretto secondo X negativo e l'asse 3 diretto secondo Y negativo
Svincolo I (J)	codici di svincolo per le azioni interne; i primi sei codici si riferiscono al nodo iniziale, i restanti sei al nodo finale (il valore 1 indica che la relativa azione interna non è attiva)
Wink V	costante di sottofondo (coefficiente di Winkler) per la modellazione della trave su suolo elastico
Wink O	costante di sottofondo (coefficiente di Winkler) per la modellazione del suolo elastico orizzontale

Con riferimento al **Documento di Affidabilità** "*Test di validazione del software di calcolo PRO_SAP e dei moduli aggiuntivi PRO_SAP Modulo Geotecnico, PRO_CAD nodi acciaio e PRO_MST*" - versione Settembre 2014, disponibile per il download sul sito **www.2si.it**, si segnalano i seguenti esempi applicativi:

Test N°	Titolo
2	TRAVI A UNA CAMPATA
3	TRAVE A PIU' CAMPATE
4	TRAVE A UNA CAMPATA SU TERRENO ALLA WINKLER
5	TRAVI SU TERRENO ALLA WINKLER CON CARICO TRASVERSALE
6	TELAI PIANI CON CERNIERE ALLA BASE
7	TELAI PIANI CON INCASTRI ALLA BASE
11	STRUTTURE SOGGETTE A VARIAZIONI TERMICHE
12	STRUTTURE SU TERRENO ALLA WINKLER SOTTOPOSTE A CARICHI DISTRIBUITI TRIANGOLARI
21	DRILLING
24	TENSIONI E ROTAZIONI RISPETTO ALLA CORDA DI ELEMENTI TRAVE
27	FRECCIA DI ELEMENTI TRAVE
42	GERARCHIA DELLE RESISTENZE PER TRAVI IN C.A.
43	GERARCHIA DELLE RESISTENZE PER PILASTRI IN C.A.
44	VERIFICA ALLE TA DI STRUTTURE IN C.A.
45	VERIFICA AGLI SLU DI STRUTTURE IN C.A.
47	VERIFICA A PUNZONAMENTO ALLO SLU DI TRAVI IN C.A.
48	PROGETTAZIONE A TAGLIO DI STRUTTURE IN C.A. SECONDO IL D.M. 9/1/96
49	PROGETTAZIONE A TAGLIO DI STRUTTURE IN C.A. SECONDO IL D.M. 14/1/2008
50	VERIFICA ALLO SLE (TENSIONI E FESSURAZIONE) DI STRUTTURE IN C.A.
51	VERIFICA ALLO SLE (DEFORMAZIONE) DI STRUTTURE IN C.A.
52	FATTORE DI STRUTTURA
53	SOVRARESISTENZE
54	DETTAGLI COSTRUTTIVI C.A.: LIMITI D'ARMATURA PILASTRI E NODI TRAVE-PILASTRO
56	VERIFICA DI STABILITA' DI ASTE COMPRESSE IN ACCIAIO – METODO OMEGA
57	LUCE LIBERA DI TRAVI E ASTE IN ACCIAIO
58	LUCE LIBERA DI COLONNE IN ACCIAIO

59	SVERGOLAMENTO DI TRAVI IN ACCIAIO
64	STABILITA' DI ASTE COMPOSTE IN ACCIAIO
73	VALUTAZIONE EFFETTO P-δ SU PILASTRATA
74	VALUTAZIONE EFFETTO P-δ SU TELAIO 3D
85	ANALISI PUSHOVER DI UN EDIFICIO IN C.A.
87	ANALISI ELASTO PLASTICA INCREMENTALE
88	ANALISI ELASTO PLASTICA INCREMENTALE
98	VERIFICA ALLO SLU DI STRUTTURE IN LEGNO SECONDO EC5
99	VERIFICA ALLO SLE DI STRUTTURE IN LEGNO SECONDO EC5
102	SNELLEZZE EC5
130	PROGETTO E VERIFICA DI TRAVI PREM

Elem.Note	Nodo I	Nodo J	Mat.	Sez.	Rotaz.	Svincolo I	Svincolo J	Wink V	Wink O	
						gradi			daN/cm3	daN/cm3
1	Asta	86	30	30	30					
2	Asta	28	86	30	30					
3	Asta	95	55	30	30					
4	Asta	32	95	30	30					
5	Asta	107	70	30	30					
6	Asta	106	76	31	30					
7	Asta	76	108	31	30					
8	Asta	75	11	32	31					
9	Asta	94	52	30	30					
10	Asta	85	50	31	30					
11	Asta	50	87	31	30					
12	Asta	28	94	30	30					
13	Asta	60	34	32	31					
14	Asta	66	107	30	30					
15	Asta	11	80	32	31					
16	Asta	34	7	32	31					
17	Asta	40	100	31	30					
18	Asta	85	40	31	30					
19	Asta	41	101	31	30					
20	Asta	89	41	31	30					
21	Asta	25	58	32	31					
22	Asta	9	25	32	31					
23	Asta	24	57	32	31					
24	Asta	60	24	32	31					
25	Pilas.	70	108	1	6					
26	Pilas.	71	109	1	6					
27	Pilas.	14	20	3	1	180.00				
28	Pilas.	26	77	3	1	270.00				
29	Pilas.	28	85	1	6					
30	Pilas.	29	86	1	6					
31	Pilas.	30	87	1	6					
32	Pilas.	31	88	1	6					
33	Pilas.	32	89	1	6					
34	Trave	20	19	3	22					
35	Trave	19	84	3	22					
36	Trave	64	78	3	22					
37	Trave	78	86	3	22					
38	Pilas.	44	94	1	6					
39	Pilas.	45	95	1	6					
40	Trave	74	79	3	22					
41	Trave	79	88	3	22					
42	Trave	96	102	1	10					
43	Trave	110	111	1	10					
44	Pilas.	52	100	1	6					
45	Pilas.	55	101	1	6					
46	Trave	20	64	3	22					

47	Trave f.	45	55	1	16		6.00	1.00
48	Pilas.	72	110	1	6			
49	Trave	64	74	3	22			
50	Trave	74	77	3	22			
51	Trave	19	78	3	22			
52	Trave	78	79	3	22			
53	Trave	79	81	3	22			
54	Trave	77	81	3	22			
55	Trave f.	45	46	1	15		6.00	1.00
56	Pilas.	47	33	1	6			
57	Trave	81	90	3	22			
58	Pilas.	64	15	3	20			
59	Pilas.	78	91	3	20			
60	Pilas.	74	16	3	20			
61	Pilas.	79	97	3	20			
62	Pilas.	19	5	3	21			
63	Pilas.	81	103	3	21			
64	Trave f.	65	66	1	16		6.00	1.00
65	Pilas.	20	6	3	1	180.00		
66	Pilas.	66	106	1	6			
67	Trave f.	66	67	1	16		6.00	1.00
68	Pilas.	77	82	3	1	270.00		
69	Trave f.	67	70	1	16		6.00	1.00
70	Pilas.	80	63	1	6			
71	Trave	6	5	3	22			
72	Trave	84	85	1	10			
73	Trave	85	86	1	10			
74	Trave f.	32	45	1	16		6.00	1.00
75	Trave f.	70	71	1	16		6.00	1.00
76	Trave	88	89	1	10			
77	Trave	89	90	1	10			
78	Trave f.	71	72	1	16		6.00	1.00
79	Trave	106	107	1	10			
80	Trave	107	108	1	10			
81	Trave	108	109	1	10			
82	Trave	109	110	1	10			
83	Trave	85	94	1	12			
84	Trave	94	100	1	12			
85	Trave	100	106	1	12			
86	Trave	89	95	1	12			
87	Trave	95	101	1	12			
88	Trave	101	110	1	12			
89	Trave	5	2	3	22			
90	Trave	26	39	3	24			
91	Trave	93	99	1	10			
92	Trave	91	50	3	25			
93	Trave	56	69	1	10			
94	Trave	24	35	1	19			
95	Trave	105	106	1	10			
96	Trave f.	72	73	1	16		6.00	1.00
97	Trave	16	97	3	22			
98	Trave	97	8	3	25			
99	Trave	6	15	3	22			
100	Trave	15	16	3	22			
101	Trave f.	36	44	1	15		6.00	1.00
102	Trave f.	51	52	1	15		6.00	1.00
103	Trave	16	82	3	22			
104	Trave	5	91	3	23			
105	Trave	91	97	3	23			
106	Trave	97	103	3	23			
107	Pilas.	92	54	1	6			
108	Trave	49	34	1	18			
109	Trave	34	21	1	18			
110	Trave	21	22	1	18			
111	Trave f.	27	36	1	15		6.00	1.00
112	Trave	82	103	3	22			
113	Trave	103	10	3	22			
114	Pilas.	59	12	1	6			
115	Trave f.	36	51	1	15		6.00	1.00
116	Trave f.	51	65	1	15		6.00	1.00
117	Pilas.	5	104	3	21			
118	Pilas.	91	112	3	20			
119	Pilas.	107	76	1	6			
120	Pilas.	108	80	1	6			
121	Pilas.	109	83	1	6			
122	Pilas.	97	1	3	20			
123	Pilas.	103	4	3	21			

124	Pilas.	85	60	1	6		
125	Pilas.	86	50	1	6		
126	Pilas.	87	7	1	6		
127	Pilas.	88	8	1	6		
128	Pilas.	89	9	1	6		
129	Trave	104	112	3	6		
130	Trave	112	1	3	6		
131	Trave	1	4	3	6		
132	Trave	39	33	3	24		
133	Pilas.	94	40	1	6		
134	Pilas.	95	41	1	6		
135	Trave	14	17	3	24		
136	Trave	17	18	3	24		
137	Trave	42	61	1	10		
138	Trave	92	98	1	10		
139	Pilas.	100	57	1	6		
140	Pilas.	101	58	1	6		
141	Trave	18	26	3	24		
142	Trave	23	25	1	19		
143	Pilas.	110	92	1	6		
144	Trave	25	48	1	19		
145	Trave	48	54	1	19		
146	Trave	3	37	3	24		
147	Trave	37	38	3	24		
148	Trave	38	39	3	24		
149	Trave	14	3	3	24		
150	Pilas.	68	73	1	6		
151	Trave f.	55	12	1	15	6.00	1.00
152	Trave	3	27	3	24		
153	Trave	17	37	3	24		
154	Trave	37	29	3	24		
155	Trave	18	38	3	24		
156	Trave	38	31	3	24		
157	Trave	15	91	3	22		
158	Trave	2	13	1	10		
159	Trave	43	54	1	18		
160	Trave	35	62	1	19		
161	Pilas.	106	75	1	6		
162	Pilas.	18	74	3	20		
163	Pilas.	38	79	3	20		
164	Trave	22	23	1	18		
165	Trave	49	24	1	19		
166	Pilas.	3	19	3	21		
167	Trave	2	60	1	10		
168	Trave	60	50	1	10		
169	Trave	50	7	1	10		
170	Trave	7	8	1	10		
171	Trave	8	9	1	10		
172	Trave	9	10	1	10		
173	Pilas.	53	46	1	6		
174	Trave	75	76	1	10		
175	Trave	76	80	1	10		
176	Trave	80	83	1	10		
177	Trave	83	92	1	10		
178	Trave	60	40	1	12		
179	Trave	40	57	1	12		
180	Trave	57	75	1	12		
181	Trave	9	41	1	12		
182	Trave	41	58	1	12		
183	Trave	58	92	1	12		
184	Trave	87	88	1	10		
185	Pilas.	36	93	1	6		
186	Trave	13	56	1	10		
187	Pilas.	93	13	1	6		
188	Pilas.	27	84	1	6		
189	Pilas.	7	21	1	6		
190	Trave	69	75	1	10		
191	Trave	34	11	1	19		
192	Trave	21	63	1	19		
193	Trave	10	42	1	10		
194	Trave	61	98	1	10		
195	Trave	90	96	1	10		
196	Trave	102	111	1	10		
197	Pilas.	8	22	1	6		
198	Pilas.	33	90	1	6		
199	Trave f.	52	66	1	16	6.00	1.00
200	Trave	63	43	1	18		

201	Pilas.	84	2	1	6			
202	Pilas.	90	10	1	6			
203	Pilas.	9	23	1	6			
204	Pilas.	46	96	1	6			
205	Pilas.	96	42	1	6			
206	Pilas.	73	111	1	6			
207	Trave f.	47	53	1	16		6.00	1.00
208	Trave	86	87	1	10			
209	Pilas.	39	81	3	21			
210	Pilas.	60	49	1	6			
211	Pilas.	40	24	1	6			
212	Trave	11	63	1	18			
213	Pilas.	83	43	1	6			
214	Trave	84	93	1	10			
215	Trave	99	105	1	10			
216	Trave f.	27	28	1	16		6.00	1.00
217	Trave	22	43	1	19			
218	Pilas.	75	62	1	6			
219	Trave	62	11	1	18			
220	Trave f.	53	59	1	16		6.00	1.00
221	Pilas.	76	11	1	6			
222	Trave f.	55	72	1	16		6.00	1.00
223	Trave f.	28	29	1	16		6.00	1.00
224	Pilas.	111	98	1	6			
225	Pilas.	102	61	1	6			
226	Pilas.	41	25	1	6			
227	Pilas.	12	102	1	6			
228	Pilas.	50	34	1	6			
229	Trave f.	59	68	1	16		6.00	1.00
230	Trave f.	29	30	1	16		6.00	1.00
231	Trave f.	30	31	1	16		6.00	1.00
232	Pilas.	57	35	1	6			
233	Pilas.	58	48	1	6			
234	Pilas.	65	105	1	6			
235	Pilas.	105	69	1	6			
236	Pilas.	51	99	1	6			
237	Pilas.	99	56	1	6			
238	Trave f.	31	32	1	16		6.00	1.00
239	Trave f.	32	33	3	16		6.00	1.00
240	Trave f.	28	44	1	16		6.00	1.00
241	Trave f.	44	52	1	16		6.00	1.00
242	Pilas.	67	107	1	6			
243	Pilas.	17	64	3	20			
244	Pilas.	37	78	3	20			
245	Pilas.	122	130	4	20			
246	Pilas.	127	133	4	20			
247	Pilas.	114	123	4	21			
248	Pilas.	128	134	4	21			
249	Pilas.	118	124	4	1			
250	Pilas.	125	131	4	1	90.00		
251	Trave	123	124	4	22			
252	Trave	111	123	4	22			
253	Trave	132	129	4	22			
254	Trave	109	132	4	22			
255	Trave	133	130	4	22			
256	Trave	107	133	4	22			
257	Trave	129	124	4	22			
258	Trave	130	129	4	22			
259	Trave	131	130	4	22			
260	Trave	132	123	4	22			
261	Trave	133	132	4	22			
262	Trave	134	133	4	22			
263	Trave	134	131	4	22			
264	Trave	105	134	4	22			
265	Pilas.	129	119	4	20			
266	Pilas.	132	136	4	20			
267	Pilas.	130	120	4	20			
268	Pilas.	133	137	4	20			
269	Pilas.	123	116	4	21			
270	Pilas.	134	138	4	21			
271	Pilas.	124	117	4	1			
272	Pilas.	131	135	4	1	90.00		
273	Trave	116	117	4	22			
274	Trave	98	116	4	22			
275	Trave	128	125	3	24			
276	Trave	83	136	4	25			
277	Trave	137	120	4	22			

278	Trave	76	137	4	25
279	Trave	119	117	4	22
280	Trave	120	119	4	22
281	Trave	135	120	4	22
282	Trave	136	116	4	23
283	Trave	137	136	4	23
284	Trave	138	137	4	23
285	Trave	138	135	4	22
286	Trave	69	138	4	22
287	Pilas.	116	139	4	21
288	Pilas.	136	140	4	20
289	Pilas.	137	113	4	20
290	Pilas.	138	115	4	21
291	Trave	140	139	4	6
292	Trave	113	140	4	6
293	Trave	115	113	4	6
294	Trave	65	128	3	24
295	Trave	121	118	3	24
296	Trave	122	121	3	24
297	Trave	125	122	3	24
298	Trave	126	114	3	24
299	Trave	127	126	3	24
300	Trave	128	127	3	24
301	Trave	114	118	3	24
302	Trave	73	114	3	24
303	Trave	126	121	3	24
304	Trave	71	126	3	24
305	Trave	127	122	3	24
306	Trave	67	127	3	24
307	Trave	136	119	4	22
308	Pilas.	121	129	4	20
309	Pilas.	126	132	4	20

MODELLAZIONE DELLA STRUTTURA: ELEMENTI SOLAIO-PANNELLO

LEGENDA TABELLA DATI SOLAI-PANNELLI

Il programma utilizza per la modellazione elementi a tre o più nodi denominati in generale solaio o pannello.
Ogni elemento solaio-pannello è individuato da una poligonale di nodi 1,2, ..., N.
L'elemento solaio è utilizzato in primo luogo per la modellazione dei carichi agenti sugli elementi strutturali. In secondo luogo può essere utilizzato per la corretta ripartizione delle forze orizzontali agenti nel proprio piano. L'elemento balcone è derivato dall'elemento solaio.
I carichi agenti sugli elementi solaio, raccolti in un archivio, sono direttamente assegnati agli elementi utilizzando le informazioni raccolte nell' archivio (es. i coefficienti combinatori). La tabella seguente riporta i dati utilizzati per la definizione dei carichi e delle masse.
L'elemento pannello è utilizzato solo per l'applicazione dei carichi, quali pesi delle tamponature o spinte dovute al vento o terre. In questo caso i carichi sono applicati in analogia agli altri elementi strutturali (si veda il cap. SCHEMATIZZAZIONE DEI CASI DI CARICO).

Id.Arch.	Identificativo dell' archivio
Tipo	Tipo di carico ***Variab.*** Carico variabile generico ***Var. rid.*** Carico variabile generico con riduzione in funzione dell' area (c.5.5. …) ***Neve*** Carico di neve
G1k	carico permanente (comprensivo del peso proprio)
G2k	carico permanente non strutturale e non compiutamente definito
Qk	carico variabile
Fatt. A	fattore di riduzione del carico variabile (0.5 o 0.75) per tipo "Var.rid."
S sis.	fattore di riduzione del carico variabile per la definizione delle masse sismiche per D.M. 96 (vedi NOTA sul capitolo "normativa di riferimento")
Psi 0	Coefficiente combinatorio dei valori caratteristici delle azioni variabili: ***per valore raro***
Psi 1	Coefficiente combinatorio dei valori caratteristici delle azioni variabili: ***per valore frequente***
Psi 2	Coefficiente combinatorio dei valori caratteristici delle azioni variabili: ***per valore quasi permanente***
Psi S 2	Coefficiente di combinazione che fornisce il valore quasi-permanente dell'azione variabile: ***per la definizione delle masse sismiche***
Fatt. Fi	Coefficiente di correlazione dei carichi per edifici

Ogni elemento è caratterizzato da un insieme di proprietà riportate in tabella che ne completano la modellazione. In particolare per ogni elemento viene indicato in tabella:

Elem	numero dell'elemento
Tipo	codice di comportamento ***S*** elemento utilizzato solo per scarico ***C*** elemento utilizzato per scarico e per modellazione piano rigido ***P*** elemento utilizzato come pannello ***M*** scarico monodirezionale ***B*** scarico bidirezionale
Id.Arch.	Identificativo dell' archivio
Mat	codice del materiale assegnato all'elemento
Spessore	spessore dell'elemento (costante)
Orditura	angolo (rispetto all'asse X) della direzione dei travetti principali
Gk	carico permanente solaio (comprensivo del peso proprio)
Qk	carico variabile solaio
Nodi	numero dei nodi che definiscono l'elemento (5 per riga)

Nel caso in cui si sia proceduto alla progettazione dei solai con le tensioni ammissibili vengono riportate le massime tensioni nell'elemento (massima compressione nel calcestruzzo, massima tensione nell'acciaio, massima tensione tangenziale); nel caso in cui si sia proceduto alla progettazione con il metodo degli stati limite vengono riportati il rapporto x/d e le verifiche per sollecitazioni proporzionali nonché le verifiche in esercizio.

In particolare i simboli utilizzati in tabella assumono il seguente significato:

Elem.	numero identificativo dell'elemento
Stato	Codici di verifica relativi alle tensioni normali e alle tensioni tangenziali
Note	Viene riportato il codice relativo alla sezione(s) e relativo al materiale(m);
Pos.	Ascissa del punto di verifica
F ist, F infi	Frecce instantanee e a tempo infinito
Momento	Momento flettente
Taglio	Sollecitazione di taglio
Af inf.	Area di armatura longitudinale posta all'intradosso della trave
Af sup.	Area di armatura longitudinale posta all'estradosso della trave
AfV	Area dell'armatura atta ad assorbire le azioni di taglio
Beff	Base della sezione di cls per l'assorbimento del taglio
	simboli utilizzati con il metodo delle tensioni ammissibili:
sc max	Massima tensione di compressione del calcestruzzo
sf max	Massima tensione nell'acciaio
tau max	Massima tensione tangenziale nel cls

	simboli utilizzati con il metodo degli stati limite:
x/d	rapporto tra posizione dell'asse neutro e altezza utile alla rottura della sezione (per sola flessione)
verif.	rapporto Sd/Su con sollecitazioni ultime proporzionali: valore minore o uguale a 1 per verifica positiva
Verif.V	rapporto Sd/Su con sollecitazioni taglianti proporzionali valore minore o uguale a 1 per verifica positiva
rRfck	rapporto tra la massima compressione nel calcestruzzo e la tensione fck in combinazioni rare [normalizzato a 1]
rFfck	rapporto tra la massima compressione nel calcestruzzo e la tensione fck in combinazioni frequenti [normalizzato a 1]
rPfck	rapporto tra la massima compressione nel calcestruzzo e la tensione fck in combinazioni quasi permanenti [normalizzato a 1]
rRfyk	rapporto tra la massima tensione nell'acciaio e la tensione fyk in combinazioni frequenti [normalizzato a 1]
rFyk	rapporto tra la massima tensione nell'acciaio e la tensione fyk in combinazioni rare [normalizzato a 1]
rPfyk	rapporto tra la massima tensione nell'acciaio e la tensione fyk in combinazioni quasi permanenti [normalizzato a 1]
wR	apertura caratteristica delle fessure in combinazioni rare [mm]
wF	apertura caratteristica delle fessure in combinazioni frequenti [mm]
wP	apertura caratteristica delle fessure in combinazioni quasi permanenti [mm]

Nel caso in cui si sia proceduto alla verifica delle tamponature secondo il D.M. 14.01.2008 - §7.2.3 viene riportata una tabella riassuntiva delle verifiche degli elementi pannello. La verifica confronta i momenti sollecitanti indotti dal sisma con i momenti resistenti, secondo tre ipotesi, due basate sulla resistenza a pressoflessione della tamponatura ed una basata sul cinematismo a seguito della formazione di tre cerniere plastiche sulla tamponatura (rif. Ufficio di Vigilanza sulle Costruzioni, Provincia di Terni).
Qualora la tamponatura sia di tipo antiespulsione (nelle due possibili varianti ordinaria o armata) viene condotta una verifica con meccanismo ad arco con degrado di resistenza. La verifica confronta le pressioni sollecitanti indotte dal sisma con le pressioni resistenti che la tamponatura sviluppa attraverso il meccanismo ad arco. La verifica considera anche il degrado di resistenza dovuto al danneggiamento nel piano della tamponatura.
Per quest'ultima tamponatura sono disponibili, in funzione del materiale impiegato (materiale [52] o materiale [53]):

- **Tamponatura Antiespulsione ordinaria Poroton® Cis Edil** sp.30 cm; con metodo di verifica per meccanismo ad arco con degrado di resistenza, sviluppato attraverso i risultati di un progetto di ricerca sperimentale condotto dall'Università degli Studi di Padova. Utilizzabile per il materiale [52].
- **Tamponatura Antiespulsione armata Poroton® Cis Edil** sp.30 cm; con metodo di verifica per meccanismo ad arco con degrado di resistenza, sviluppato attraverso i risultati di un progetto di ricerca sperimentale condotto dall'Università degli Studi di Padova. Utilizzabile per il materiale [53].

La verifica è stata calibrata sulla base di prove sperimentali sul sistema di Tamponatura Antiespulsione anche in presenza di aperture.
(rif. Rapporti di Prova redatti dal Dipartimento ICEA - Università degli Studi di Padova di test sperimentali condotti sul sistema Tamponatura Antiespulsione di Cis Edil)

In particolare i simboli utilizzati in tabella assumono il seguente significato:

Elem.	Numero identificativo dell'elemento
Stato	Codice di verifica
Ver. c.c.	Verifica nell'ipotesi di trave appoggiata con carico concentrato in mezzeria
Ver. c.d.	Verifica nell'ipotesi di trave appoggiata con carico distribuito
Ver. c.cin.	Verifica nell'ipotesi di cinematismo con formazione di cerniere plastiche in appoggio e mezzeria
Ver. CIS	Rapporto pa/pr (valore minore o uguale a 1 per verifica positiva)
Z	Quota del baricentro dell'elemento
T1	Periodo proprio dell'edificio nella direzione di interesse (ortogonale al pannello)
Ta	Periodo proprio della parete
Sa	Accelerazione massima, adimensionalizzata allo SLV
pa	Pressione sulla parete causata dall'azione sismica
pr	Pressione resistente del meccanismo ad arco
Drift	Spostamento relativo interpiano allo SLV valutato secondo il D.M. 14.01.2008 - § 7.3.3.3
Beta a	Coef. riduttivo per tener conto del danneggiamento del piano dipendente dallo spostamento, ottenuto sperimentalmente

Con riferimento al **Documento di Affidabilità** "*Test di validazione del software di calcolo PRO_SAP e dei moduli aggiuntivi PRO_SAP Modulo Geotecnico, PRO_CAD nodi acciaio e PRO_MST*" - versione Maggio 2011, disponibile per il download sul sito **www.2si.it**, si segnalano i seguenti esempi applicativi:

Test N°	Titolo
14	**ANALISI DEI CARICHI PER UN SOLAIO DI COPERTURA**
15	**EFFETTI DELLO SPESSORE SULLA RIGIDEZZA DEI SOLAI**
16	**SOLAIO: CONFRONTO FRA RIGIDO E DEFORMABILE**

17	**SOLAIO: MISTO LEGNO-CALCESTRUZZO**
28	**FRECCIA DI SOLAI IN C.A.**
119	**PROGETTO E VERIFICA DI SOLAI IN MATERIALE XLAM**

ID Arch.	Tipo	G1k	G2k	Qk	Fatt. A	s sis.	Psi 0	Psi 1	Psi 2	Psi S 2	Fatt. Fi
		kN/ m2	kN/ m2	kN/ m2							
1	Variab.	3.00	2.50	3.00		1.00	0.70	0.70	0.60	0.60	1.00
2	Variab.	3.00	1.50	0.50		1.00	0.0	0.0	0.0	0.0	1.00
3	Neve	3.00	2.50	1.00		1.00	0.50	0.20	0.0	0.0	1.00

Elem.	Tipo	ID Arch.	Mat.	Spessore	Orditura	G1k	G2k	Qk	Nodo 1/6..	Nodo 2/7..	Nodo 3/8..	Nodo..	Nodo..
						kN/ m2	kN/ m2	kN/ m2					
1	CM	3	m=1	26.0	0.0	3.00	2.50	1.00	10	98	92	9	
2	CM	3	m=1	26.0	90.0	3.00	2.50	1.00	97	103	10	8	
3	CM	1	m=1	26.0	0.0	3.00	2.50	3.00	14	17	37	3	
4	CM	1	m=1	26.0	0.0	3.00	2.50	3.00	17	18	38	37	
5	CM	1	m=1	26.0	0.0	3.00	2.50	3.00	18	26	39	38	
6	CM	1	m=1	26.0	90.0	3.00	2.50	3.00	3	37	29	27	
7	CM	1	m=1	30.0	0.0	3.00	2.50	3.00	105	84	85	106	
8	CM	3	m=1	30.0	0.0	3.00	2.50	1.00	60	75	69	2	
9	CM	3	m=1	30.0	0.0	3.00	2.50	1.00	22	23	54	43	
10	CM	1	m=1	26.0	90.0	3.00	2.50	3.00	37	38	31	29	
11	CM	3	m=1	26.0	0.0	3.00	2.50	1.00	49	34	11	62	
12	CM	3	m=1	26.0	0.0	3.00	2.50	1.00	34	21	63	11	
13	CM	3	m=1	26.0	0.0	3.00	2.50	1.00	63	21	22	43	
14	CM	1	m=1	26.0	0.0	3.00	2.50	3.00	90	111	110	89	
15	CM	1	m=1	26.0	90.0	3.00	2.50	3.00	38	39	33	31	
16	CM	1	m=1	26.0	0.0	3.00	2.50	3.00	20	64	78	19	
17	CM	1	m=1	26.0	0.0	3.00	2.50	3.00	78	64	74	79	
18	CM	1	m=1	26.0	0.0	3.00	2.50	3.00	74	77	81	79	
19	CM	2	m=1	26.0	0.0	3.00	1.50	0.50	6	15	91	5	
20	CM	2	m=1	26.0	0.0	3.00	1.50	0.50	15	16	97	91	
21	CM	2	m=1	26.0	0.0	3.00	1.50	0.50	16	82	103	97	
22	CM	1	m=1	26.0	90.0	3.00	2.50	3.00	84	19	78	86	
23	CM	1	m=1	26.0	90.0	3.00	2.50	3.00	78	79	88	86	
24	CM	1	m=1	26.0	90.0	3.00	2.50	3.00	79	81	90	88	
25	CM	3	m=1	26.0	90.0	3.00	2.50	1.00	5	91	50	2	
26	CM	3	m=1	26.0	90.0	3.00	2.50	1.00	91	97	8	50	
27	CM	3	m=1	26.0	90.0	3.00	2.50	1.00	137	138	69	76	
28	CM	1	m=1	26.0	0.0	3.00	2.50	3.00	118	121	126	114	
29	CM	1	m=1	26.0	0.0	3.00	2.50	3.00	121	122	127	126	
30	CM	1	m=1	26.0	0.0	3.00	2.50	3.00	122	125	128	127	
31	CM	1	m=1	26.0	90.0	3.00	2.50	3.00	114	126	71	73	
32	CM	1	m=1	26.0	90.0	3.00	2.50	3.00	126	127	67	71	
33	CM	1	m=1	26.0	90.0	3.00	2.50	3.00	127	128	65	67	
34	CM	1	m=1	26.0	0.0	3.00	2.50	3.00	124	129	132	123	
35	CM	1	m=1	26.0	0.0	3.00	2.50	3.00	132	129	130	133	
36	CM	1	m=1	26.0	0.0	3.00	2.50	3.00	130	131	134	133	
37	CM	2	m=1	26.0	0.0	3.00	1.50	0.50	117	119	136	116	
38	CM	2	m=1	26.0	0.0	3.00	1.50	0.50	119	120	137	136	
39	CM	2	m=1	26.0	0.0	3.00	1.50	0.50	120	135	138	137	
40	CM	1	m=1	26.0	90.0	3.00	2.50	3.00	111	123	132	109	
41	CM	1	m=1	26.0	90.0	3.00	2.50	3.00	132	133	107	109	
42	CM	1	m=1	26.0	90.0	3.00	2.50	3.00	133	134	105	107	
43	CM	3	m=1	26.0	90.0	3.00	2.50	1.00	116	136	83	98	
44	CM	3	m=1	26.0	90.0	3.00	2.50	1.00	136	137	76	83	

MODELLAZIONE DELLE AZIONI
LEGENDA TABELLA DATI AZIONI

Il programma consente l'uso di diverse tipologie di carico (azioni). Le azioni utilizzate nella modellazione sono individuate da una sigla identificativa ed un codice numerico (gli elementi strutturali richiamano quest'ultimo nella propria descrizione). Per ogni azione applicata alla struttura viene di riportato il codice, il tipo e la sigla identificativa. Le tabelle successive dettagliano i valori caratteristici di ogni azione in relazione al tipo. Le tabelle riportano infatti i seguenti dati in relazione al tipo:

1	**carico concentrato nodale** 6 dati (forza Fx, Fy, Fz, momento Mx, My, Mz)
2	**spostamento nodale impresso** 6 dati (spostamento Tx,Ty,Tz, rotazione Rx,Ry,Rz)
3	**carico distribuito globale su elemento tipo trave** 7 dati (fx,fy,fz,mx,my,mz,ascissa di inizio carico) 7 dati (fx,fy,fz,mx,my,mz,ascissa di fine carico)
4	**carico distribuito locale su elemento tipo trave** 7 dati (f1,f2,f3,m1,m2,m3,ascissa di inizio carico) 7 dati (f1,f2,f3,m1,m2,m3,ascissa di fine carico)
5	**carico concentrato globale su elemento tipo trave** 7 dati (Fx,Fy,Fz,Mx,My,Mz,ascissa di carico)
6	**carico concentrato locale su elemento tipo trave** 7 dati (F1, F2, F3, M1, M2, M3, ascissa di carico)
7	**variazione termica applicata ad elemento tipo trave** 7 dati (variazioni termiche: uniforme, media e differenza in altezza e larghezza al nodo iniziale e finale)
8	**carico di pressione uniforme su elemento tipo piastra** 1 dato (pressione)
9	**carico di pressione variabile su elemento tipo piastra** 4 dati (pressione, quota, pressione, quota)
10	**variazione termica applicata ad elemento tipo piastra** 2 dati (variazioni termiche: media e differenza nello spessore)
11	**carico variabile generale su elementi tipo trave e piastra** 1 dato descrizione della tipologia 4 dati per segmento (posizione, valore, posizione, valore)

	la tipologia precisa l'ascissa di definizione, la direzione del carico, la modalità di carico e la larghezza d'influenza per gli elementi tipo trave
12	**gruppo di carichi con impronta su piastra** 9 dati (numero di ripetizioni in direzione X e Y, valore di ciascun carico, posizione centrale del primo, dimensioni dell' impronta, interasse tra i carichi

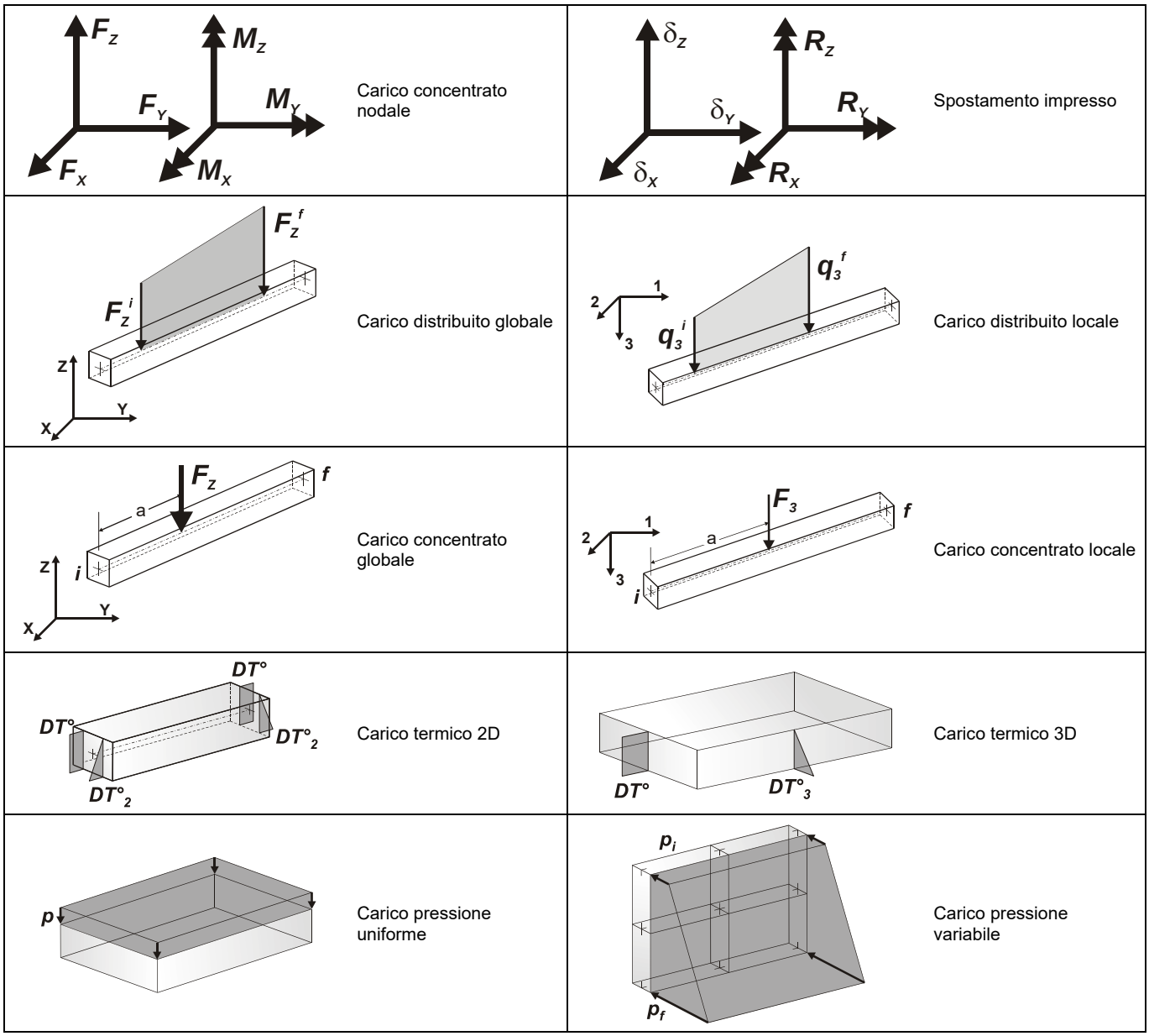

Tipo	carico distribuito globale su trave

Id	Tipo	Pos.	fx	fy	fz	mx	my	mz
		m	kN/ m	kN/ m	kN/ m	kN	kN	kN
1	copertura lignea	0.0	0.0	0.0	-3.60	0.0	0.0	0.0
		0.0	0.0	0.0	-3.60	0.0	0.0	0.0
4	neve falde laterali	0.0	0.0	0.0	-2.60	0.0	0.0	0.0
		0.0	0.0	0.0	-2.60	0.0	0.0	0.0
5	tamponamenti esterni	0.0	0.0	0.0	-20.00	0.0	0.0	0.0
		0.0	0.0	0.0	-20.00	0.0	0.0	0.0
6	tamponamento int ext	0.0	0.0	0.0	-10.00	0.0	0.0	0.0
		0.0	0.0	0.0	-10.00	0.0	0.0	0.0

SCHEMATIZZAZIONE DEI CASI DI CARICO

LEGENDA TABELLA CASI DI CARICO

Il programma consente l'applicazione di diverse tipologie di casi di carico.
Sono previsti i seguenti 11 tipi di casi di carico:

	Sigla	*Tipo*	*Descrizione*
1	**Ggk**	A	caso di carico comprensivo del peso proprio struttura
2	**Gk**	NA	caso di carico con azioni permanenti
3	**Qk**	NA	caso di carico con azioni variabili
4	**Gsk**	A	caso di carico comprensivo dei carichi permanenti sui solai e sulle coperture
5	**Qsk**	A	caso di carico comprensivo dei carichi variabili sui solai
6	**Qnk**	A	caso di carico comprensivo dei carichi di neve sulle coperture
7	**Qtk**	SA	caso di carico comprensivo di una variazione termica agente sulla struttura
8	**Qvk**	NA	caso di carico comprensivo di azioni da vento sulla struttura
9	**Esk**	SA	caso di carico sismico con analisi statica equivalente
10	**Edk**	SA	caso di carico sismico con analisi dinamica
11	**Etk**	NA	caso di carico comprensivo di azioni derivanti dall' incremento di spinta delle terre in condizione sismica
12	**Pk**	NA	caso di carico comprensivo di azioni derivanti da coazioni, cedimenti e precompressioni

Sono di tipo automatico A (ossia non prevedono introduzione dati da parte dell'utente) i seguenti casi di carico: 1-Ggk; 4-Gsk; 5-Qsk; 6-Qnk.

Sono di tipo semi-automatico SA (ossia prevedono una minima introduzione dati da parte dell'utente) i seguenti casi di carico:
7-Qtk, in quanto richiede solo il valore della variazione termica;
9-Esk e 10-Edk, in quanto richiedono il valore dell'angolo di ingresso del sisma e l'individuazione dei casi di carico partecipanti alla definizione delle masse.

Sono di tipo non automatico NA ossia prevedono la diretta applicazione di carichi generici agli elementi strutturali (si veda il precedente punto Modellazione delle Azioni) i restanti casi di carico.

Nella tabella successiva vengono riportati i casi di carico agenti sulla struttura, con l'indicazione dei dati relativi al caso di carico stesso:
Numero Tipo e *Sigla identificativa*, *Valore di riferimento* del caso di carico (se previsto).

In successione, per i casi di carico non automatici, viene riportato l'elenco di nodi ed elementi direttamente caricati con la sigla identificativa del carico.

Per i casi di carico di tipo sismico (9-Esk e 10-Edk), viene riportata la tabella di definizione delle masse: per ogni caso di carico partecipante alla definizione delle masse viene indicata la relativa aliquota (partecipazione) considerata. Si precisa che per i caso di carico 5-Qsk e 6-Qnk la partecipazione è prevista localmente per ogni elemento solaio o copertura presente nel modello (si confronti il valore Sksol nel capitolo relativo agli elementi solaio) e pertanto la loro partecipazione è di norma pari a uno.

CDC	Tipo	Sigla Id	Note
1	Ggk	CDC=Ggk (peso proprio della struttura)	
2	Gsk	CDC=Gsk (permanente solai-coperture)	
3	Qsk	CDC=Qsk (accidentale solai)	
4	Gk	CDC=Gk (permanente generico) tetto in legno.	D2 :da 279 a 281 Azione : copertura lignea
			D2 :da 291 a 293 Azione : copertura lignea
5	Qk	CDC=Qk (variabile generico)neve	D2 :da 279 a 281 Azione : neve falde laterali
			D2 :da 291 a 293 Azione : neve falde laterali
6	Gk	tamponamenti	D2 :da 251 a 252 Azione : tamponamenti esterni
			D2 : 253 Azione : tamponamento int ext
			D2 : 255 Azione : tamponamento int ext
			D2 :da 257 a 259 Azione : tamponamenti esterni
			D2 :da 260 a 262 Azione : tamponamento int ext
			D2 :da 263 a 264 Azione : tamponamenti esterni
			D2 : 273 Azione : tamponamento int ext
			D2 : 275 Azione : tamponamenti esterni
			D2 :da 279 a 281 Azione : tamponamento int ext
			D2 :da 282 a 285 Azione : tamponamento int ext
			D2 :da 294 a 297 Azione : tamponamenti esterni
			D2 :da 298 a 300 Azione : tamponamento int ext
			D2 :da 301 a 302 Azione : tamponamenti esterni
			D2 : 303 Azione : tamponamento int ext
			D2 : 305 Azione : tamponamento int ext
7	Edk	CDC=Ed (dinamico SLU) alfa=0.0 (ecc. +)	partecipazione:1.00 per 1 CDC=Ggk (peso proprio della struttura)
			partecipazione:1.00 per 2 CDC=Gsk (permanente solai-coperture)
			partecipazione:1.00 per 3 CDC=Qsk (accidentale solai)
			partecipazione:1.00 per 4 CDC=Gk (permanente generico) tetto in legno.
			partecipazione:1.00 per 6 tamponamenti
8	Edk	CDC=Ed (dinamico SLU) alfa=0.0 (ecc. -)	come precedente CDC sismico
9	Edk	CDC=Ed (dinamico SLU) alfa=90.00 (ecc. +)	come precedente CDC sismico
10	Edk	CDC=Ed (dinamico SLU) alfa=90.00 (ecc. -)	come precedente CDC sismico

CDC	Tipo	Sigla Id	Note
11	Edk	CDC=Ed (dinamico SLD) alfa=0.0 (ecc. 0)	come precedente CDC sismico
12	Edk	CDC=Ed (dinamico SLD) alfa=90.00 (ecc. 0)	come precedente CDC sismico
13	Edk	CDC=Ed (dinamico SL CO) alfa=0.0 (ecc. 0)	come precedente CDC sismico
14	Edk	CDC=Ed (dinamico SL CO) alfa=90.00 (ecc. 0)	come precedente CDC sismico

DEFINIZIONE DELLE COMBINAZIONI

LEGENDA TABELLA COMBINAZIONI DI CARICO

Il programma combina i diversi tipi di casi di carico (CDC) secondo le regole previste dalla normativa vigente.
Le combinazioni previste sono destinate al controllo di sicurezza della struttura ed alla verifica degli spostamenti e delle sollecitazioni.

La prima tabella delle combinazioni riportata di seguito comprende le seguenti informazioni: *Numero*, *Tipo*, *Sigla identificativa*. Una seconda tabella riporta il *peso nella combinazione* assunto per ogni caso di carico.

Cmb	Tipo	Sigla Id	effetto P-delta
1	SLU	Comb. SLU A1 1	
2	SLU	Comb. SLU A1 2	
3	SLU	Comb. SLU A1 3	
4	SLU	Comb. SLU A1 4	
5	SLU	Comb. SLU A1 5	
6	SLU	Comb. SLU A1 6	
7	SLU	Comb. SLU A1 7	
8	SLU	Comb. SLU A1 8	
9	SLU	Comb. SLU A1 9	
10	SLU	Comb. SLU A1 10	
11	SLU	Comb. SLU A1 11	
12	SLU	Comb. SLU A1 12	
13	SLU	Comb. SLU A1 13	
14	SLU	Comb. SLU A1 14	
15	SLU	Comb. SLU A1 (SLV sism.) 15	
16	SLU	Comb. SLU A1 (SLV sism.) 16	
17	SLU	Comb. SLU A1 (SLV sism.) 17	
18	SLU	Comb. SLU A1 (SLV sism.) 18	
19	SLU	Comb. SLU A1 (SLV sism.) 19	
20	SLU	Comb. SLU A1 (SLV sism.) 20	
21	SLU	Comb. SLU A1 (SLV sism.) 21	
22	SLU	Comb. SLU A1 (SLV sism.) 22	
23	SLU	Comb. SLU A1 (SLV sism.) 23	
24	SLU	Comb. SLU A1 (SLV sism.) 24	
25	SLU	Comb. SLU A1 (SLV sism.) 25	
26	SLU	Comb. SLU A1 (SLV sism.) 26	
27	SLU	Comb. SLU A1 (SLV sism.) 27	
28	SLU	Comb. SLU A1 (SLV sism.) 28	
29	SLU	Comb. SLU A1 (SLV sism.) 29	
30	SLU	Comb. SLU A1 (SLV sism.) 30	
31	SLU	Comb. SLU A1 (SLV sism.) 31	
32	SLU	Comb. SLU A1 (SLV sism.) 32	
33	SLU	Comb. SLU A1 (SLV sism.) 33	
34	SLU	Comb. SLU A1 (SLV sism.) 34	
35	SLU	Comb. SLU A1 (SLV sism.) 35	
36	SLU	Comb. SLU A1 (SLV sism.) 36	
37	SLU	Comb. SLU A1 (SLV sism.) 37	
38	SLU	Comb. SLU A1 (SLV sism.) 38	
39	SLU	Comb. SLU A1 (SLV sism.) 39	
40	SLU	Comb. SLU A1 (SLV sism.) 40	
41	SLU	Comb. SLU A1 (SLV sism.) 41	
42	SLU	Comb. SLU A1 (SLV sism.) 42	
43	SLU	Comb. SLU A1 (SLV sism.) 43	
44	SLU	Comb. SLU A1 (SLV sism.) 44	
45	SLU	Comb. SLU A1 (SLV sism.) 45	
46	SLD(sis)	Comb. SLU A1 (SLV sism.) 46	
47	SLD(sis)	Comb. SLE (SLD sism.) 47	
48	SLD(sis)	Comb. SLE (SLD sism.) 48	
49	SLD(sis)	Comb. SLE (SLD sism.) 49	
50	SLD(sis)	Comb. SLE (SLD sism.) 50	

Cmb	CDC 1/15...	CDC 2/16...	CDC 3/17...	CDC 4/18...	CDC 5/19...	CDC 6/20...	CDC 7/21...	CDC 8/22...	CDC 9/23...	CDC 10/24...	CDC 11/25...	CDC 12/26...	CDC 13/27...	CDC 14/28...
1	1.30	1.50	0.0	1.50	0.0	1.30	0.0	0.0	0.0	0.0	0.0	0.0	0.0	0.0
2	1.30	1.50	0.0	1.50	0.75	1.30	0.0	0.0	0.0	0.0	0.0	0.0	0.0	0.0
3	1.30	1.50	1.50	1.50	0.0	1.30	0.0	0.0	0.0	0.0	0.0	0.0	0.0	0.0
4	1.30	1.50	1.50	1.50	0.75	1.30	0.0	0.0	0.0	0.0	0.0	0.0	0.0	0.0
5	1.00	1.00	0.0	1.00	0.0	1.00	0.0	0.0	0.0	0.0	0.0	0.0	0.0	0.0
6	1.00	1.00	0.0	1.00	0.75	1.00	0.0	0.0	0.0	0.0	0.0	0.0	0.0	0.0

Cmb	CDC 1/15...	CDC 2/16...	CDC 3/17...	CDC 4/18...	CDC 5/19...	CDC 6/20...	CDC 7/21...	CDC 8/22...	CDC 9/23...	CDC 10/24...	CDC 11/25...	CDC 12/26...	CDC 13/27...	CDC 14/28...
7	1.00	1.00	1.50	1.00	0.0	1.00	0.0	0.0	0.0	0.0	0.0	0.0	0.0	0.0
8	1.00	1.00	1.50	1.00	0.75	1.00	0.0	0.0	0.0	0.0	0.0	0.0	0.0	0.0
9	1.30	1.50	0.0	1.50	1.50	1.30	0.0	0.0	0.0	0.0	0.0	0.0	0.0	0.0
10	1.30	1.50	1.05	1.50	0.0	1.30	0.0	0.0	0.0	0.0	0.0	0.0	0.0	0.0
11	1.30	1.50	1.05	1.50	1.50	1.30	0.0	0.0	0.0	0.0	0.0	0.0	0.0	0.0
12	1.00	1.00	0.0	1.00	1.50	1.00	0.0	0.0	0.0	0.0	0.0	0.0	0.0	0.0
13	1.00	1.00	1.05	1.00	0.0	1.00	0.0	0.0	0.0	0.0	0.0	0.0	0.0	0.0
14	1.00	1.00	1.05	1.00	1.50	1.00	0.0	0.0	0.0	0.0	0.0	0.0	0.0	0.0
15	1.00	1.00	0.60	1.00	0.0	1.00	-1.00	0.0	-0.30	0.0	0.0	0.0	0.0	0.0
16	1.00	1.00	0.60	1.00	0.0	1.00	-1.00	0.0	0.30	0.0	0.0	0.0	0.0	0.0
17	1.00	1.00	0.60	1.00	0.0	1.00	1.00	0.0	-0.30	0.0	0.0	0.0	0.0	0.0
18	1.00	1.00	0.60	1.00	0.0	1.00	1.00	0.0	0.30	0.0	0.0	0.0	0.0	0.0
19	1.00	1.00	0.60	1.00	0.0	1.00	-1.00	0.0	0.0	-0.30	0.0	0.0	0.0	0.0
20	1.00	1.00	0.60	1.00	0.0	1.00	-1.00	0.0	0.0	0.30	0.0	0.0	0.0	0.0
21	1.00	1.00	0.60	1.00	0.0	1.00	1.00	0.0	0.0	-0.30	0.0	0.0	0.0	0.0
22	1.00	1.00	0.60	1.00	0.0	1.00	1.00	0.0	0.0	0.30	0.0	0.0	0.0	0.0
23	1.00	1.00	0.60	1.00	0.0	1.00	0.0	-1.00	-0.30	0.0	0.0	0.0	0.0	0.0
24	1.00	1.00	0.60	1.00	0.0	1.00	0.0	-1.00	0.30	0.0	0.0	0.0	0.0	0.0
25	1.00	1.00	0.60	1.00	0.0	1.00	0.0	1.00	-0.30	0.0	0.0	0.0	0.0	0.0
26	1.00	1.00	0.60	1.00	0.0	1.00	0.0	1.00	0.30	0.0	0.0	0.0	0.0	0.0
27	1.00	1.00	0.60	1.00	0.0	1.00	0.0	-1.00	0.0	-0.30	0.0	0.0	0.0	0.0
28	1.00	1.00	0.60	1.00	0.0	1.00	0.0	-1.00	0.0	0.30	0.0	0.0	0.0	0.0
29	1.00	1.00	0.60	1.00	0.0	1.00	0.0	1.00	0.0	-0.30	0.0	0.0	0.0	0.0
30	1.00	1.00	0.60	1.00	0.0	1.00	0.0	1.00	0.0	0.30	0.0	0.0	0.0	0.0
31	1.00	1.00	0.60	1.00	0.0	1.00	-0.30	0.0	-1.00	0.0	0.0	0.0	0.0	0.0
32	1.00	1.00	0.60	1.00	0.0	1.00	-0.30	0.0	1.00	0.0	0.0	0.0	0.0	0.0
33	1.00	1.00	0.60	1.00	0.0	1.00	0.30	0.0	-1.00	0.0	0.0	0.0	0.0	0.0
34	1.00	1.00	0.60	1.00	0.0	1.00	0.30	0.0	1.00	0.0	0.0	0.0	0.0	0.0
35	1.00	1.00	0.60	1.00	0.0	1.00	0.0	-0.30	-1.00	0.0	0.0	0.0	0.0	0.0
36	1.00	1.00	0.60	1.00	0.0	1.00	0.0	-0.30	1.00	0.0	0.0	0.0	0.0	0.0
37	1.00	1.00	0.60	1.00	0.0	1.00	0.0	0.30	-1.00	0.0	0.0	0.0	0.0	0.0
38	1.00	1.00	0.60	1.00	0.0	1.00	0.0	0.30	1.00	0.0	0.0	0.0	0.0	0.0
39	1.00	1.00	0.60	1.00	0.0	1.00	-0.30	0.0	0.0	-1.00	0.0	0.0	0.0	0.0
40	1.00	1.00	0.60	1.00	0.0	1.00	-0.30	0.0	0.0	1.00	0.0	0.0	0.0	0.0
41	1.00	1.00	0.60	1.00	0.0	1.00	0.30	0.0	0.0	-1.00	0.0	0.0	0.0	0.0
42	1.00	1.00	0.60	1.00	0.0	1.00	0.30	0.0	0.0	1.00	0.0	0.0	0.0	0.0
43	1.00	1.00	0.60	1.00	0.0	1.00	0.0	-0.30	0.0	-1.00	0.0	0.0	0.0	0.0
44	1.00	1.00	0.60	1.00	0.0	1.00	0.0	-0.30	0.0	1.00	0.0	0.0	0.0	0.0
45	1.00	1.00	0.60	1.00	0.0	1.00	0.0	0.30	0.0	-1.00	0.0	0.0	0.0	0.0
46	1.00	1.00	0.60	1.00	0.0	1.00	0.0	0.30	0.0	1.00	0.0	0.0	0.0	0.0
47	1.00	1.00	0.60	1.00	0.0	1.00	0.0	0.0	0.0	0.0	1.00	0.0	0.0	0.0
48	1.00	1.00	0.60	1.00	0.0	1.00	0.0	0.0	0.0	0.0	-1.00	0.0	0.0	0.0
49	1.00	1.00	0.60	1.00	0.0	1.00	0.0	0.0	0.0	0.0	0.0	1.00	0.0	0.0
50	1.00	1.00	0.60	1.00	0.0	1.00	0.0	0.0	0.0	0.0	0.0	-1.00	0.0	0.0

AZIONE SISMICA

VALUTAZIONE DELL' AZIONE SISMICA

L'azione sismica sulle costruzioni è valutata a partire dalla "pericolosità sismica di base", in condizioni ideali di sito di riferimento rigido con superficie topografica orizzontale.
Allo stato attuale, la pericolosità sismica su reticolo di riferimento nell'intervallo di riferimento è fornita dai dati pubblicati sul sito http://esse1.mi.ingv.it/. Per punti non coincidenti con il reticolo di riferimento e periodi di ritorno non contemplati direttamente si opera come indicato nell' allegato alle NTC (rispettivamente media pesata e interpolazione).

L' azione sismica viene definita in relazione ad un periodo di riferimento Vr che si ricava, per ciascun tipo di costruzione, moltiplicandone la vita nominale per il coefficiente d'uso (vedi tabella Parametri della struttura). Fissato il periodo di riferimento Vr e la probabilità di superamento Pver associata a ciascuno degli stati limite considerati, si ottiene il periodo di ritorno Tr e i relativi parametri di pericolosità sismica (vedi tabella successiva):
ag: accelerazione orizzontale massima del terreno;
Fo: valore massimo del fattore di amplificazione dello spettro in accelerazione orizzontale;
T*c: periodo di inizio del tratto a velocità costante dello spettro in accelerazione orizzontale;

Parametri della struttura					
Classe d'uso	Vita Vn [anni]	Coeff. Uso	Periodo Vr [anni]	Tipo di suolo	Categoria topografica
III	50.0	1.5	75.0	C	T1

Individuati su reticolo di riferimento i parametri di pericolosità sismica si valutano i parametri spettrali riportati in tabella:
S è il coefficiente che tiene conto della categoria di sottosuolo e delle condizioni topografiche
mediante la relazione seguente S = Ss*St (3.2.5)
Fo è il fattore che quantifica l'amplificazione spettrale massima, su sito di riferimento rigido orizzontale
Fv è il fattore che quantifica l'amplificazione spettrale massima verticale, in termini di accelerazione orizzontale massima del terreno ag su sito di riferimento rigido orizzontale
Tb è il periodo corrispondente all'inizio del tratto dello spettro ad accelerazione costante.
Tc è il periodo corrispondente all'inizio del tratto dello spettro a velocità costante.
Td è il periodo corrispondente all'inizio del tratto dello spettro a spostamento costante.

Id nodo	Longitudine	Latitudine	Distanza
			Km
Loc.	14.694	37.384	
48526	14.682	37.378	1.249
48527	14.745	37.378	4.540
48305	14.746	37.428	6.689
48304	14.683	37.428	4.972

SL	Pver	Tr	ag	Fo	T*c
		Anni	g		sec
SLO	81.0	45.0	0.050	2.510	0.270
SLD	63.0	75.0	0.063	2.590	0.290
SLV	10.0	712.0	0.217	2.400	0.450
SLC	5.0	1462.0	0.305	2.440	0.490

SL	ag	S	Fo	Fv	Tb	Tc	Td
	g				sec	sec	sec
SLO	0.050	1.500	2.510	0.755	0.146	0.437	1.798
SLD	0.063	1.500	2.590	0.878	0.153	0.458	1.852
SLV	0.217	1.388	2.400	1.509	0.205	0.615	2.468
SLC	0.305	1.254	2.440	1.819	0.217	0.651	2.820

RISULTATI ANALISI SISMICHE

LEGENDA TABELLA ANALISI SISMICHE

Il programma consente l'analisi di diverse configurazioni sismiche.

Sono previsti, infatti, i seguenti casi di carico:

9. Esk caso di carico sismico con analisi statica equivalente
10. Edk caso di carico sismico con analisi dinamica

Ciascun caso di carico è caratterizzato da un angolo di ingresso e da una configurazione di masse determinante la forza sismica complessiva (si rimanda al capitolo relativo ai casi di carico per chiarimenti inerenti questo aspetto).

Nella colonna Note, in funzione della norma in uso sono riportati i parametri fondamentali che caratterizzano l' azione sismica: in particolare possono essere presenti i seguenti valori:

Angolo di ingresso	Angolo di ingresso dell'azione sismica orizzontale
Fattore di importanza	Fattore di importanza dell'edificio, in base alla categoria di appartenenza
Zona sismica	Zona sismica
Accelerazione ag	Accelerazione orizzontale massima sul suolo
Categoria suolo	Categoria di profilo stratigrafico del suolo di fondazione
Fattore di struttura q	Fattore dipendente dalla tipologia strutturale
Fattore di sito S	Fattore dipendente dalla stratigrafia e dal profilo topografico
Classe di duttilità CD	Classe di duttilità della struttura – "A" duttilità alta, "B" duttilità bassa
Fattore riduz. SLD	Fattore di riduzione dello spettro elastico per lo stato limite di danno
Periodo proprio T1	Periodo proprio di vibrazione della struttura
Coefficiente Lambda	Coefficiente dipendente dal periodo proprio T1 e dal numero di piani della struttura
Ordinata spettro Sd(T1)	Valore delle ordinate dello spettro di progetto per lo stato limite ultimo, componente orizzontale (verticale Svd)
Ordinata spettro Se(T1)	Valore delle ordinate dello spettro elastico ridotta del fattore SLD per lo stato limite di danno, componente orizzontale (verticale Sve)
Ordinata spettro S (Tb-Tc)	Valore dell' ordinata dello spettro in uso nel tratto costante
numero di modi considerati	Numero di modi di vibrare della struttura considerati nell'analisi dinamica

Per ciascun caso di carico sismico viene riportato l'insieme di dati sotto riportati (le masse sono espresse in unità di forza):

a) **analisi sismica statica equivalente**:
- quota, posizione del centro di applicazione e azione orizzontale risultante, posizione del baricentro delle rigidezze, rapporto r/Ls (per strutture a nucleo), indici di regolarità e/r secondo EC8 4.2.3.2
- azione sismica complessiva

b) **analisi sismica dinamica con spettro di risposta**:
- quota, posizione del centro di massa e massa risultante, posizione del baricentro delle rigidezze, rapporto r/Ls (per strutture a nucleo) **,** indici di regolarità e/r secondo EC8 4.2.3.2
- frequenza, periodo,accelerazione spettrale, massa eccitata nelle tre direzioni globali per tutti i modi
- massa complessiva ed aliquota di massa complessiva eccitata.

Per ciascuna combinazione sismica definita SLD o SLO viene riportato il livello di deformazione etaT (dr) degli elementi strutturali verticali. Per semplicità di consultazione il livello è espresso anche in unità 1000*etaT/h da confrontare direttamente con i valori forniti nella norma (es. 5 per edifici con tamponamenti collegati rigidamente alla struttura, 10.0 per edifici con tamponamenti collegati elasticamente, 3 per edifici in muratura ordinaria, 4 per edifici in muratura armata).

Qualora si applichi il D.M. 96 (vedi NOTA sul capitolo "normativa di riferimento") l'analisi sismica dinamica può essere comprensiva di sollecitazione verticale contemporanea a quella orizzontale, nel qual caso è effettuata una sovrapposizione degli effetti in ragione della radice dei quadrati degli effetti stessi. Per ciascuna combinazione sismica - analisi effettuate con il D.M. 96 (vedi NOTA sul capitolo "normativa di riferimento") - viene riportato il livello di deformazione etaT, etaP e etaD degli elementi strutturali verticali. Per semplicità di consultazione il livello è espresso in unità 1000*etaT/h da confrontare direttamente con il valore 2 o 4 per la verifica.

Per gli edifici sismicamente isolati si riportano di seguito le verifiche condotte sui dispositivi di isolamento. Le verifiche sono effettuate secondo l' allegato 10.A dell'Ordinanza 3274 e smi. In particolare la tabella, per ogni combinazione SLU (SLC per il DM 14-01-2008) sismica riporta il codice di verifica e i valori utilizzati per la verifica: spostamento dE, area ridotta e dimensione A2, azione verticale, deformazioni di taglio dell' elastomero e tensioni nell' acciaio.

Nodo	Nodo di appoggio dell' isolatore
Cmb	Combinazione oggetto della verifica
Verif.	Codice di verifica ok – verifica positiva , NV – verifica negativa, ND – verifica non completata
dE	Spostamento relativo tra le due facce (amplificato del 20% per Ordinanza 3274 e smi) combinato con la regola del 30%
Ang fi	Angolo utilizzato per il calcolo dell' area ridotta Ar (per dispositivi circolari)
V	Azione verticale agente
Ar	Area ridotta efficace
Dim A2	Dimensione utile per il calcolo della deformazione per rotazione
Sig s	Tensione nell' inserto in acciaio
Gam c(a,s,t)	Deformazioni di taglio dell' elestomero
Vcr	Carico critico per instabilità

Affinché la verifica sia positiva deve essere:

1) V > 0
2) Sig s < fyk
3) Gam t < 5
4) Gam s < Gam * (caratteristica dell' elastomero)
5) Gam s < 2
6) V < 0.5 Vcr

Con riferimento al **Documento di Affidabilità** "*Test di validazione del software di calcolo PRO_SAP e dei moduli aggiuntivi PRO_SAP Modulo Geotecnico, PRO_CAD nodi acciaio e PRO_MST*" - versione Maggio 2011, disponibile per il download sul sito **www.2si.it**, si segnalano i seguenti esempi applicativi:

Test N°	Titolo
23	DM 2008: SPETTRO
29	SISMICA 1000/H, SOMMA V, EFFETTO P-δ
30	ANALISI DI UN EDIFICIO CON ISOLATORI SISMICI
70	MASSE SISMICHE
75	PROGETTO DI ISOLATORI ELASTOMERICI
76	VERIFICA DI ISOLATORI ELASTOMERICI
77	VERIFICA DI ISOLATORI FRICTION PENDULUM

CDC	Tipo	Sigla Id	Note
7	Edk	CDC=Ed (dinamico SLU) alfa=0.0 (ecc. +)	
			categoria suolo: C
			fattore di sito S = 1.388
			ordinata spettro (tratto Tb-Tc) = 0.157 g
			angolo di ingresso:0.0
			eccentricità aggiuntiva: positiva
			periodo proprio T1: 0.217 sec.
			fattore di struttura q: 4.600
			fattore per spost. mu d: 11.198
			classe di duttilità CD: B
			numero di modi considerati: 9
			combinaz. modale: CQC

Quota	M Sismica x g	Pos. GX	Pos. GY	E agg. X-X	E agg. Y-Y	Pos. KX	Pos. KY	rapp. r/Ls	rapp. ex/rx	rapp. ey/ry
m	kN	m	m	m	m	m	m			
10.55	1179.64	14.06	17.04	0.0	-0.53	13.84	17.04	1.405	0.032	3.2960e-04
9.95	432.53	13.85	17.04	0.0	-0.83	13.82	17.08	1.418	0.003	0.004

Quota	M Sismica x g	Pos. GX	Pos. GY	E agg. X-X	E agg. Y-Y	Pos. KX	Pos. KY	rapp. r/Ls	rapp. ex/rx	rapp. ey/ry
7.55	4676.63	13.84	17.04	0.0	-1.51	13.83	17.32	1.594	4.7640e-04	0.017
5.05	6762.32	13.84	17.04	0.0	-1.51	13.83	17.32	1.594	4.7721e-04	0.017
Risulta	1.305e+04									

Modo	Frequenza	Periodo	Acc. Spettrale	M efficace X x g	%	M efficace Y x g	%	M efficace Z x g	%	Energia	Energia x v
	Hz	sec	g	kN		kN		kN			
1	4.606	0.217	0.157	1.011e+04	77.5	0.51	3.90e-03	4.27	3.27e-02	0.0	0.0
2	4.948	0.202	0.159	2.76	2.12e-02	1.131e+04	86.7	13.40	0.1	0.0	0.0
3	5.632	0.178	0.176	201.18	1.5	26.41	0.2	0.04	2.81e-04	0.0	0.0
4	7.135	0.140	0.203	1272.40	9.7	32.65	0.3	0.22	1.66e-03	0.0	0.0
5	7.277	0.137	0.205	1.62	1.24e-02	0.01	8.14e-05	6.79e-04	5.20e-06	0.0	0.0
6	7.783	0.128	0.211	9.05	6.93e-02	0.04	3.43e-04	1.01	7.77e-03	0.0	0.0
7	7.986	0.125	0.213	168.84	1.3	4.35	3.33e-02	0.18	1.37e-03	0.0	0.0
8	8.853	0.113	0.222	13.63	0.1	0.26	1.96e-03	0.08	6.21e-04	0.0	0.0
9	9.724	0.103	0.229	488.79	3.7	10.86	8.32e-02	6.39	4.90e-02	0.0	0.0
Risulta				1.227e+04		1.139e+04		25.59			
In percentuale				94.01		87.24		0.20			

CDC	Tipo	Sigla Id	Note
8	Edk	CDC=Ed (dinamico SLU) alfa=0.0 (ecc. -)	
			categoria suolo: C
			fattore di sito S = 1.388
			ordinata spettro (tratto Tb-Tc) = 0.157 g
			angolo di ingresso:0.0
			eccentricità aggiuntiva: negativa
			periodo proprio T1: 0.229 sec.
			fattore di struttura q: 4.600
			fattore per spost. mu d: 10.648
			classe di duttilità CD: B
			numero di modi considerati: 9
			combinaz. modale: CQC

Quota	M Sismica x g	Pos. GX	Pos. GY	E agg. X-X	E agg. Y-Y	Pos. KX	Pos. KY	rapp. r/Ls	rapp. ex/rx	rapp. ey/ry
m	kN	m	m	m	m	m	m			
10.55	1179.64	14.06	17.04	0.0	0.53	13.84	17.04	1.405	0.032	3.2960e-04
9.95	432.53	13.85	17.04	0.0	0.83	13.82	17.08	1.418	0.003	0.004
7.55	4676.63	13.84	17.04	0.0	1.51	13.83	17.32	1.594	4.7640e-04	0.017
5.05	6762.32	13.84	17.04	0.0	1.51	13.83	17.32	1.594	4.7721e-04	0.017
Risulta	1.305e+04									

Modo	Frequenza	Periodo	Acc. Spettrale	M efficace X x g	%	M efficace Y x g	%	M efficace Z x g	%	Energia	Energia x v
	Hz	sec	g	kN		kN		kN			
1	4.358	0.229	0.157	9430.10	72.3	3.90	2.99e-02	2.60	1.99e-02	0.0	0.0
2	4.947	0.202	0.159	4.21	3.22e-02	1.129e+04	86.5	14.12	0.1	0.0	0.0
3	5.816	0.172	0.180	718.67	5.5	47.90	0.4	1.35	1.03e-02	0.0	0.0
4	7.208	0.139	0.204	1143.18	8.8	19.90	0.2	0.07	5.46e-04	0.0	0.0
5	7.293	0.137	0.205	196.21	1.5	2.58	1.98e-02	7.74e-03	5.93e-05	0.0	0.0
6	7.785	0.128	0.211	11.09	8.50e-02	0.07	5.06e-04	1.00	7.63e-03	0.0	0.0
7	8.020	0.125	0.214	246.35	1.9	4.07	3.12e-02	0.19	1.45e-03	0.0	0.0
8	8.858	0.113	0.222	1.57	1.20e-02	4.20	3.21e-02	0.70	5.36e-03	0.0	0.0
9	9.733	0.103	0.229	530.29	4.1	17.47	0.1	6.12	4.69e-02	0.0	0.0
Risulta				1.228e+04		1.139e+04		26.16			
In percentuale				94.10		87.31		0.20			

CDC	Tipo	Sigla Id	Note
9	Edk	CDC=Ed (dinamico SLU) alfa=90.00 (ecc. +)	
			categoria suolo: C
			fattore di sito S = 1.388
			ordinata spettro (tratto Tb-Tc) = 0.157 g
			angolo di ingresso:90.00
			eccentricità aggiuntiva: positiva
			periodo proprio T1: 0.204 sec.
			fattore di struttura q: 4.600
			fattore per spost. mu d: 11.838
			classe di duttilità CD: B
			numero di modi considerati: 9
			combinaz. modale: CQC

Quota	M Sismica x g	Pos. GX	Pos. GY	E agg. X-X	E agg. Y-Y	Pos. KX	Pos. KY	rapp. r/Ls	rapp. ex/rx	rapp. ey/ry
m	kN	m	m	m	m	m	m			
10.55	1179.64	14.06	17.04	0.68	0.0	13.84	17.04	1.405	0.032	3.2960e-04
9.95	432.53	13.85	17.04	1.00	0.0	13.82	17.08	1.418	0.003	0.004
7.55	4676.63	13.84	17.04	1.00	0.0	13.83	17.32	1.594	4.7640e-04	0.017
5.05	6762.32	13.84	17.04	1.00	0.0	13.83	17.32	1.594	4.7721e-04	0.017
Risulta	1.305e+04									

Modo	Frequenza	Periodo	Acc. Spettrale	M efficace X x g	%	M efficace Y x g	%	M efficace Z x g	%	Energia	Energia x v
	Hz	sec	g	kN		kN		kN			
1	4.499	0.222	0.157	9444.85	72.4	212.43	1.6	2.05	1.57e-02	0.0	0.0
2	4.895	0.204	0.158	316.16	2.4	1.053e+04	80.7	15.38	0.1	0.0	0.0
3	5.757	0.174	0.179	497.44	3.8	593.53	4.5	0.03	2.45e-04	0.0	0.0
4	7.157	0.140	0.203	1286.41	9.9	16.89	0.1	0.26	2.01e-03	0.0	0.0
5	7.281	0.137	0.205	24.98	0.2	0.43	3.33e-03	2.54e-03	1.95e-05	0.0	0.0
6	7.784	0.128	0.211	8.93	6.84e-02	0.11	8.10e-04	1.01	7.74e-03	0.0	0.0
7	7.993	0.125	0.213	189.29	1.5	2.76	2.12e-02	0.14	1.10e-03	0.0	0.0
8	8.931	0.112	0.222	7.12	5.45e-02	15.49	0.1	0.57	4.39e-03	0.0	0.0
9	9.707	0.103	0.229	500.62	3.8	29.03	0.2	6.94	5.32e-02	0.0	0.0
Risulta				1.228e+04		1.140e+04		26.39			
In percentuale				94.06		87.33		0.20			

CDC	Tipo	Sigla Id	Note
10	Edk	CDC=Ed (dinamico SLU) alfa=90.00 (ecc. -)	
			categoria suolo: C
			fattore di sito S = 1.388
			ordinata spettro (tratto Tb-Tc) = 0.157 g
			angolo di ingresso:90.00
			eccentricità aggiuntiva: negativa
			periodo proprio T1: 0.203 sec.
			fattore di struttura q: 4.600
			fattore per spost. mu d: 11.910
			classe di duttilità CD: B
			numero di modi considerati: 9
			combinaz. modale: CQC

Quota	M Sismica x g	Pos. GX	Pos. GY	E agg. X-X	E agg. Y-Y	Pos. KX	Pos. KY	rapp. r/Ls	rapp. ex/rx	rapp. ey/ry
m	kN	m	m	m	m	m	m			
10.55	1179.64	14.06	17.04	-0.68	0.0	13.84	17.04	1.405	0.032	3.2960e-04
9.95	432.53	13.85	17.04	-1.00	0.0	13.82	17.08	1.418	0.003	0.004
7.55	4676.63	13.84	17.04	-1.00	0.0	13.83	17.32	1.594	4.7640e-04	0.017

Quota	M Sismica x g	Pos. GX	Pos. GY	E agg. X-X	E agg. Y-Y	Pos. KX	Pos. KY	rapp. r/Ls	rapp. ex/rx	rapp. ey/ry
5.05	6762.32	13.84	17.04	-1.00	0.0	13.83	17.32	1.594	4.7721e-04	0.017
Risulta	1.305e+04									

Modo	Frequenza	Periodo	Acc. Spettrale	M efficace X x g	%	M efficace Y x g	%	M efficace Z x g	%	Energia	Energia x v
	Hz	sec	g	kN		kN		kN			
1	4.501	0.222	0.157	9508.17	72.9	131.83	1.0	4.71	3.61e-02	0.0	0.0
2	4.928	0.203	0.159	245.99	1.9	1.098e+04	84.1	10.44	8.00e-02	0.0	0.0
3	5.713	0.175	0.178	501.51	3.8	199.50	1.5	2.93	2.24e-02	0.0	0.0
4	7.165	0.140	0.203	1278.67	9.8	42.79	0.3	0.09	6.72e-04	0.0	0.0
5	7.282	0.137	0.205	34.17	0.3	0.19	1.44e-03	3.35e-03	2.57e-05	0.0	0.0
6	7.784	0.128	0.211	10.80	8.28e-02	0.02	1.27e-04	0.98	7.47e-03	0.0	0.0
7	7.996	0.125	0.213	193.12	1.5	5.94	4.55e-02	0.23	1.76e-03	0.0	0.0
8	8.914	0.112	0.222	2.36	1.81e-02	6.52	5.00e-02	0.08	5.87e-04	0.0	0.0
9	9.713	0.103	0.229	507.17	3.9	12.98	9.95e-02	6.81	5.22e-02	0.0	0.0
Risulta				1.228e+04		1.138e+04		26.25			
In percentuale				94.11		87.20		0.20			

CDC	Tipo	Sigla Id	Note
11	Edk	CDC=Ed (dinamico SLD) alfa=0.0 (ecc. 0)	
			categoria suolo: C
			fattore di sito S = 1.500
			ordinata spettro (tratto Tb-Tc) = 0.245 g
			angolo di ingresso:0.0
			eccentricità aggiuntiva: nulla
			periodo proprio T1: 0.222 sec.
			numero di modi considerati: 9
			combinaz. modale: CQC

Quota	M Sismica x g	Pos. GX	Pos. GY	E agg. X-X	E agg. Y-Y	Pos. KX	Pos. KY	rapp. r/Ls	rapp. ex/rx	rapp. ey/ry
m	kN	m	m	m	m	m	m			
10.55	1179.64	14.06	17.04	0.0	0.0	13.84	17.04	1.405	0.032	3.2960e-04
9.95	432.53	13.85	17.04	0.0	0.0	13.82	17.08	1.418	0.003	0.004
7.55	4676.63	13.84	17.04	0.0	0.0	13.83	17.32	1.594	4.7640e-04	0.017
5.05	6762.32	13.84	17.04	0.0	0.0	13.83	17.32	1.594	4.7721e-04	0.017
Risulta	1.305e+04									

Modo	Frequenza	Periodo	Acc. Spettrale	M efficace X x g	%	M efficace Y x g	%	M efficace Z x g	%	Energia	Energia x v
	Hz	sec	g	kN		kN		kN			
1	4.504	0.222	0.245	9673.30	74.1	1.53	1.17e-02	3.36	2.57e-02	0.0	0.0
2	4.947	0.202	0.245	0.99	7.59e-03	1.130e+04	86.6	13.91	0.1	0.0	0.0
3	5.687	0.176	0.245	584.68	4.5	41.46	0.3	0.56	4.32e-03	0.0	0.0
4	7.160	0.140	0.232	1281.04	9.8	28.54	0.2	0.16	1.25e-03	0.0	0.0
5	7.282	0.137	0.229	29.19	0.2	0.28	2.13e-03	2.43e-03	1.86e-05	0.0	0.0
6	7.784	0.128	0.221	9.81	7.52e-02	0.05	3.96e-04	1.00	7.63e-03	0.0	0.0
7	7.994	0.125	0.217	190.19	1.5	4.22	3.23e-02	0.18	1.42e-03	0.0	0.0
8	8.869	0.113	0.205	5.57	4.26e-02	0.55	4.21e-03	0.07	5.56e-04	0.0	0.0
9	9.711	0.103	0.196	506.37	3.9	15.91	0.1	6.71	5.15e-02	0.0	0.0
Risulta				1.228e+04		1.139e+04		25.96			
In percentuale				94.10		87.28		0.20			

CDC	Tipo	Sigla Id	Note
12	Edk	CDC=Ed (dinamico SLD) alfa=90.00 (ecc. 0)	
			categoria suolo: C
			fattore di sito S = 1.500
			ordinata spettro (tratto Tb-Tc) = 0.245 g
			angolo di ingresso:90.00
			eccentricità aggiuntiva: nulla
			periodo proprio T1: 0.202 sec.
			numero di modi considerati: 9
			combinaz. modale: CQC

Quota	M Sismica x g	Pos. GX	Pos. GY	E agg. X-X	E agg. Y-Y	Pos. KX	Pos. KY	rapp. r/Ls	rapp. ex/rx	rapp. ey/ry
m	kN	m	m	m	m	m	m			
10.55	1179.64	14.06	17.04	0.0	0.0	13.84	17.04	1.405	0.032	3.2960e-04
9.95	432.53	13.85	17.04	0.0	0.0	13.82	17.08	1.418	0.003	0.004
7.55	4676.63	13.84	17.04	0.0	0.0	13.83	17.32	1.594	4.7640e-04	0.017
5.05	6762.32	13.84	17.04	0.0	0.0	13.83	17.32	1.594	4.7721e-04	0.017
Risulta	1.305e+04									

Modo	Frequenza	Periodo	Acc. Spettrale	M efficace X x g	%	M efficace Y x g	%	M efficace Z x g	%	Energia	Energia x v
	Hz	sec	g	kN		kN		kN			
1	4.504	0.222	0.245	9673.30	74.1	1.53	1.17e-02	3.36	2.57e-02	0.0	0.0
2	4.947	0.202	0.245	0.99	7.59e-03	1.130e+04	86.6	13.91	0.1	0.0	0.0
3	5.687	0.176	0.245	584.68	4.5	41.46	0.3	0.56	4.32e-03	0.0	0.0
4	7.160	0.140	0.232	1281.04	9.8	28.54	0.2	0.16	1.25e-03	0.0	0.0
5	7.282	0.137	0.229	29.19	0.2	0.28	2.13e-03	2.43e-03	1.86e-05	0.0	0.0
6	7.784	0.128	0.221	9.81	7.52e-02	0.05	3.96e-04	1.00	7.63e-03	0.0	0.0
7	7.994	0.125	0.217	190.19	1.5	4.22	3.23e-02	0.18	1.42e-03	0.0	0.0
8	8.869	0.113	0.205	5.57	4.26e-02	0.55	4.21e-03	0.07	5.56e-04	0.0	0.0
9	9.711	0.103	0.196	506.37	3.9	15.91	0.1	6.71	5.15e-02	0.0	0.0
Risulta				1.228e+04		1.139e+04		25.96			
In percentuale				94.10		87.28		0.20			

CDC	Tipo	Sigla Id	Note
13	Edk	CDC=Ed (dinamico SL CO) alfa=0.0 (ecc. 0)	
			categoria suolo: C
			fattore di sito S = 1.254
			ordinata spettro (tratto Tb-Tc) = 0.203 g
			angolo di ingresso:0.0
			eccentricità aggiuntiva: nulla
			periodo proprio T1: 0.222 sec.
			fattore di struttura q: 4.600
			fattore per spost. mu d: 11.556
			classe di duttilità CD: B
			numero di modi considerati: 9
			combinaz. modale: CQC

Quota	M Sismica x g	Pos. GX	Pos. GY	E agg. X-X	E agg. Y-Y	Pos. KX	Pos. KY	rapp. r/Ls	rapp. ex/rx	rapp. ey/ry
m	kN	m	m	m	m	m	m			
10.55	1179.64	14.06	17.04	0.0	0.0	13.84	17.04	1.405	0.032	3.2960e-04
9.95	432.53	13.85	17.04	0.0	0.0	13.82	17.08	1.418	0.003	0.004
7.55	4676.63	13.84	17.04	0.0	0.0	13.83	17.32	1.594	4.7640e-04	0.017
5.05	6762.32	13.84	17.04	0.0	0.0	13.83	17.32	1.594	4.7721e-04	0.017
Risulta	1.305e+04									

Modo	Frequenza	Periodo	Acc. Spettrale	M efficace X x g	%	M efficace Y x g	%	M efficace Z x g	%	Energia	Energia x v
	Hz	sec	g	kN		kN		kN			
1	4.504	0.222	0.203	9673.30	74.1	1.53	1.17e-02	3.36	2.57e-02	0.0	0.0
2	4.947	0.202	0.215	0.99	7.59e-03	1.130e+04	86.6	13.91	0.1	0.0	0.0
3	5.687	0.176	0.237	584.68	4.5	41.46	0.3	0.56	4.32e-03	0.0	0.0
4	7.160	0.140	0.267	1281.04	9.8	28.54	0.2	0.16	1.25e-03	0.0	0.0
5	7.282	0.137	0.269	29.19	0.2	0.28	2.13e-03	2.43e-03	1.86e-05	0.0	0.0
6	7.784	0.128	0.276	9.81	7.52e-02	0.05	3.96e-04	1.00	7.63e-03	0.0	0.0
7	7.994	0.125	0.279	190.19	1.5	4.22	3.23e-02	0.18	1.42e-03	0.0	0.0
8	8.869	0.113	0.289	5.57	4.26e-02	0.55	4.21e-03	0.07	5.56e-04	0.0	0.0
9	9.711	0.103	0.297	506.37	3.9	15.91	0.1	6.71	5.15e-02	0.0	0.0
Risulta				1.228e+04		1.139e+04		25.96			
In percentuale				94.10		87.28		0.20			

CDC	Tipo	Sigla Id	Note
14	Edk	CDC=Ed (dinamico SL CO) alfa=90.00 (ecc. 0)	
			categoria suolo: C
			fattore di sito S = 1.254
			ordinata spettro (tratto Tb-Tc) = 0.203 g
			angolo di ingresso:90.00
			eccentricità aggiuntiva: nulla
			periodo proprio T1: 0.202 sec.
			fattore di struttura q: 4.600
			fattore per spost. mu d: 12.594
			classe di duttilità CD: B
			numero di modi considerati: 9
			combinaz. modale: CQC

Quota	M Sismica x g	Pos. GX	Pos. GY	E agg. X-X	E agg. Y-Y	Pos. KX	Pos. KY	rapp. r/Ls	rapp. ex/rx	rapp. ey/ry
m	kN	m	m	m	m	m	m			
10.55	1179.64	14.06	17.04	0.0	0.0	13.84	17.04	1.405	0.032	3.2960e-04
9.95	432.53	13.85	17.04	0.0	0.0	13.82	17.08	1.418	0.003	0.004
7.55	4676.63	13.84	17.04	0.0	0.0	13.83	17.32	1.594	4.7640e-04	0.017
5.05	6762.32	13.84	17.04	0.0	0.0	13.83	17.32	1.594	4.7721e-04	0.017
Risulta	1.305e+04									

Modo	Frequenza	Periodo	Acc. Spettrale	M efficace X x g	%	M efficace Y x g	%	M efficace Z x g	%	Energia	Energia x v
	Hz	sec	g	kN		kN		kN			
1	4.504	0.222	0.203	9673.30	74.1	1.53	1.17e-02	3.36	2.57e-02	0.0	0.0
2	4.947	0.202	0.215	0.99	7.59e-03	1.130e+04	86.6	13.91	0.1	0.0	0.0
3	5.687	0.176	0.237	584.68	4.5	41.46	0.3	0.56	4.32e-03	0.0	0.0
4	7.160	0.140	0.267	1281.04	9.8	28.54	0.2	0.16	1.25e-03	0.0	0.0
5	7.282	0.137	0.269	29.19	0.2	0.28	2.13e-03	2.43e-03	1.86e-05	0.0	0.0
6	7.784	0.128	0.276	9.81	7.52e-02	0.05	3.96e-04	1.00	7.63e-03	0.0	0.0
7	7.994	0.125	0.279	190.19	1.5	4.22	3.23e-02	0.18	1.42e-03	0.0	0.0
8	8.869	0.113	0.289	5.57	4.26e-02	0.55	4.21e-03	0.07	5.56e-04	0.0	0.0
9	9.711	0.103	0.297	506.37	3.9	15.91	0.1	6.71	5.15e-02	0.0	0.0
Risulta				1.228e+04		1.139e+04		25.96			
In percentuale				94.10		87.28		0.20			

Cmb	Pilas.	1000 etaT/h	etaT	inter. h	Pilas.	1000 etaT/h	etaT	inter. h	Pilas.	1000 etaT/h	etaT	inter. h
			cm	cm			cm	cm			cm	cm
46	25	0.23	0.09	370.0	26	0.23	0.08	370.0	27	0.27	0.10	370.0
	28	0.17	0.06	370.0	29	0.26	0.09	370.0	30	0.24	0.09	370.0
	31	0.25	0.09	370.0	32	0.22	0.08	370.0	33	0.19	0.07	370.0
	38	0.26	0.10	370.0	39	0.19	0.07	370.0	44	0.31	0.12	370.0

	45	0.23	0.08	370.0	48	0.18	0.07	370.0	56	0.0	0.0	200.0
	58	0.23	0.06	250.0	59	0.23	0.06	250.0	60	0.18	0.05	250.0
	61	0.18	0.05	250.0	62	0.28	0.07	250.0	63	0.15	0.04	250.0
	65	0.30	0.07	250.0	66	0.29	0.11	370.0	68	0.16	0.04	250.0
	70	0.36	0.11	300.0	107	0.34	0.10	300.0	114	0.03	6.09e-03	200.0
	117	0.31	0.07	240.0	118	0.34	0.08	240.0	119	0.20	0.05	250.0
	120	0.23	0.06	250.0	121	0.16	0.04	250.0	122	0.26	0.06	240.0
	123	0.19	0.05	240.0	124	0.28	0.07	250.0	125	0.23	0.06	250.0
	126	0.39	0.10	250.0	127	0.20	0.05	250.0	128	0.19	0.05	250.0
	133	0.36	0.09	250.0	134	0.27	0.07	250.0	139	0.34	0.09	250.0
	140	0.26	0.07	250.0	143	0.18	0.04	250.0	150	4.64e-03	9.28e-04	200.0
	161	0.29	0.07	250.0	162	0.21	0.08	370.0	163	0.20	0.08	370.0
	166	0.28	0.10	370.0	173	0.03	5.15e-03	200.0	185	0.28	0.11	370.0
	187	0.29	0.07	250.0	188	0.28	0.10	370.0	189	0.11	0.03	300.0
	197	0.28	0.09	300.0	198	0.18	0.07	370.0	201	0.28	0.07	250.0
	202	0.17	0.04	250.0	203	0.27	0.08	300.0	204	0.16	0.06	370.0
	205	0.41	0.10	250.0	206	0.18	0.06	370.0	209	0.16	0.06	370.0
	210	0.31	0.09	300.0	211	0.34	0.10	300.0	213	0.36	0.11	300.0
	218	0.40	0.12	300.0	221	0.40	0.12	300.0	224	0.15	0.04	250.0
	225	0.19	0.05	250.0	226	0.29	0.09	300.0	227	0.16	0.06	370.0
	228	0.30	0.09	300.0	232	0.32	0.10	300.0	233	0.28	0.08	300.0
	234	0.32	0.12	370.0	235	0.28	0.07	250.0	236	0.29	0.11	370.0
	237	0.26	0.07	250.0	242	0.27	0.10	370.0	243	0.25	0.09	370.0
	244	0.24	0.09	370.0	245	0.31	0.11	370.0	246	0.30	0.11	370.0
	247	0.18	0.07	370.0	248	0.32	0.12	370.0	249	0.23	0.09	370.0
	250	0.31	0.11	370.0	265	0.20	0.05	250.0	266	0.19	0.05	250.0
	267	0.23	0.06	250.0	268	0.22	0.05	250.0	269	0.26	0.07	250.0
	270	0.28	0.07	250.0	271	0.21	0.05	250.0	272	0.31	0.08	250.0
	287	0.06	0.01	240.0	288	0.02	4.75e-03	240.0	289	0.06	0.01	240.0
	290	0.04	9.08e-03	240.0	308	0.27	0.10	370.0	309	0.26	0.10	370.0
47	25	0.49	0.18	370.0	26	0.49	0.18	370.0	27	0.23	0.09	370.0
	28	0.25	0.09	370.0	29	0.30	0.11	370.0	30	0.29	0.11	370.0
	31	0.30	0.11	370.0	32	0.30	0.11	370.0	33	0.31	0.11	370.0
	38	0.54	0.20	370.0	39	0.50	0.19	370.0	44	0.58	0.22	370.0
	45	0.54	0.20	370.0	48	0.50	0.18	370.0	56	0.0	0.0	200.0
	58	0.25	0.06	250.0	59	0.32	0.08	250.0	60	0.29	0.07	250.0
	61	0.34	0.09	250.0	62	0.32	0.08	250.0	63	0.37	0.09	250.0
	65	0.26	0.07	250.0	66	0.49	0.18	370.0	68	0.36	0.09	250.0
	70	0.54	0.16	300.0	107	0.57	0.17	300.0	114	0.03	5.81e-03	200.0
	117	0.12	0.03	240.0	118	0.07	0.02	240.0	119	0.44	0.11	250.0
	120	0.47	0.12	250.0	121	0.45	0.11	250.0	122	0.12	0.03	240.0
	123	0.10	0.02	240.0	124	0.35	0.09	250.0	125	0.36	0.09	250.0
	126	0.38	0.09	250.0	127	0.37	0.09	250.0	128	0.37	0.09	250.0
	133	0.83	0.21	250.0	134	0.84	0.21	250.0	139	0.86	0.22	250.0
	140	0.86	0.22	250.0	143	0.45	0.11	250.0	150	0.10	0.02	200.0
	161	0.42	0.10	250.0	162	0.23	0.08	370.0	163	0.28	0.10	370.0
	166	0.28	0.11	370.0	173	0.03	6.44e-03	200.0	185	0.42	0.16	370.0
	187	0.63	0.16	250.0	188	0.31	0.11	370.0	189	0.57	0.17	300.0
	197	0.59	0.18	300.0	198	0.33	0.12	370.0	201	0.36	0.09	250.0
	202	0.39	0.10	250.0	203	0.60	0.18	300.0	204	0.45	0.17	370.0
	205	0.76	0.19	250.0	206	0.50	0.18	370.0	209	0.31	0.11	370.0
	210	0.59	0.18	300.0	211	0.81	0.24	300.0	213	0.56	0.17	300.0
	218	0.57	0.17	300.0	221	0.57	0.17	300.0	224	0.46	0.12	250.0
	225	0.81	0.20	250.0	226	0.87	0.26	300.0	227	0.49	0.18	370.0
	228	0.59	0.18	300.0	232	0.82	0.25	300.0	233	0.87	0.26	300.0
	234	0.50	0.19	370.0	235	0.42	0.10	250.0	236	0.47	0.17	370.0
	237	0.68	0.17	250.0	242	0.48	0.18	370.0	243	0.22	0.08	370.0
	244	0.27	0.10	370.0	245	0.54	0.20	370.0	246	0.50	0.18	370.0
	247	0.51	0.19	370.0	248	0.51	0.19	370.0	249	0.51	0.19	370.0
	250	0.51	0.19	370.0	265	0.50	0.13	250.0	266	0.46	0.12	250.0
	267	0.50	0.12	250.0	268	0.45	0.11	250.0	269	0.47	0.12	250.0
	270	0.44	0.11	250.0	271	0.53	0.13	250.0	272	0.51	0.13	250.0
	287	0.28	0.07	240.0	288	0.30	0.07	240.0	289	0.25	0.06	240.0
	290	0.20	0.05	240.0	308	0.53	0.20	370.0	309	0.50	0.18	370.0
48	25	0.53	0.19	370.0	26	0.52	0.19	370.0	27	0.27	0.10	370.0
	28	0.26	0.10	370.0	29	0.33	0.12	370.0	30	0.32	0.12	370.0
	31	0.33	0.12	370.0	32	0.33	0.12	370.0	33	0.33	0.12	370.0
	38	0.57	0.21	370.0	39	0.53	0.20	370.0	44	0.62	0.23	370.0
	45	0.58	0.21	370.0	48	0.53	0.19	370.0	56	0.0	0.0	200.0
	58	0.35	0.09	250.0	59	0.41	0.10	250.0	60	0.32	0.08	250.0
	61	0.38	0.10	250.0	62	0.43	0.11	250.0	63	0.38	0.10	250.0
	65	0.41	0.10	250.0	66	0.52	0.19	370.0	68	0.33	0.08	250.0
	70	0.64	0.19	300.0	107	0.68	0.20	300.0	114	0.03	5.50e-03	200.0
	117	0.14	0.03	240.0	118	0.15	0.04	240.0	119	0.53	0.13	250.0
	120	0.54	0.14	250.0	121	0.49	0.12	250.0	122	0.12	0.03	240.0
	123	0.15	0.04	240.0	124	0.44	0.11	250.0	125	0.44	0.11	250.0
	126	0.44	0.11	250.0	127	0.42	0.10	250.0	128	0.41	0.10	250.0

	133	0.95	0.24	250.0	134	0.93	0.23	250.0	139	1.00	0.25	250.0
	140	0.97	0.24	250.0	143	0.47	0.12	250.0	150	0.09	0.02	200.0
	161	0.52	0.13	250.0	162	0.25	0.09	370.0	163	0.30	0.11	370.0
	166	0.33	0.12	370.0	173	0.02	4.51e-03	200.0	185	0.49	0.18	370.0
	187	0.86	0.21	250.0	188	0.35	0.13	370.0	189	0.67	0.20	300.0
	197	0.69	0.21	300.0	198	0.34	0.13	370.0	201	0.46	0.11	250.0
	202	0.41	0.10	250.0	203	0.70	0.21	300.0	204	0.45	0.17	370.0
	205	0.67	0.17	250.0	206	0.53	0.19	370.0	209	0.32	0.12	370.0
	210	0.70	0.21	300.0	211	0.97	0.29	300.0	213	0.67	0.20	300.0
	218	0.67	0.20	300.0	221	0.67	0.20	300.0	224	0.47	0.12	250.0
	225	0.72	0.18	250.0	226	0.99	0.30	300.0	227	0.50	0.19	370.0
	228	0.70	0.21	300.0	232	0.96	0.29	300.0	233	0.97	0.29	300.0
	234	0.53	0.20	370.0	235	0.53	0.13	250.0	236	0.53	0.20	370.0
	237	0.92	0.23	250.0	242	0.50	0.19	370.0	243	0.26	0.10	370.0
	244	0.30	0.11	370.0	245	0.57	0.21	370.0	246	0.53	0.20	370.0
	247	0.53	0.20	370.0	248	0.54	0.20	370.0	249	0.53	0.20	370.0
	250	0.55	0.20	370.0	265	0.56	0.14	250.0	266	0.51	0.13	250.0
	267	0.56	0.14	250.0	268	0.53	0.13	250.0	269	0.50	0.12	250.0
	270	0.54	0.13	250.0	271	0.56	0.14	250.0	272	0.59	0.15	250.0
	287	0.22	0.05	240.0	288	0.28	0.07	240.0	289	0.33	0.08	240.0
	290	0.32	0.08	240.0	308	0.56	0.21	370.0	309	0.53	0.19	370.0
49	25	0.39	0.14	370.0	26	0.41	0.15	370.0	27	0.34	0.13	370.0
	28	0.37	0.14	370.0	29	0.35	0.13	370.0	30	0.36	0.13	370.0
	31	0.39	0.14	370.0	32	0.37	0.14	370.0	33	0.37	0.14	370.0
	38	0.29	0.11	370.0	39	0.30	0.11	370.0	44	0.36	0.13	370.0
	45	0.38	0.14	370.0	48	0.38	0.14	370.0	56	0.0	0.0	200.0
	58	0.35	0.09	250.0	59	0.37	0.09	250.0	60	0.36	0.09	250.0
	61	0.38	0.10	250.0	62	0.38	0.09	250.0	63	0.40	0.10	250.0
	65	0.38	0.10	250.0	66	0.35	0.13	370.0	68	0.41	0.10	250.0
	70	0.40	0.12	300.0	107	0.47	0.14	300.0	114	0.07	0.01	200.0
	117	0.35	0.08	240.0	118	0.50	0.12	240.0	119	0.33	0.08	250.0
	120	0.44	0.11	250.0	121	0.33	0.08	250.0	122	0.49	0.12	240.0
	123	0.36	0.09	240.0	124	0.39	0.10	250.0	125	0.37	0.09	250.0
	126	0.59	0.15	250.0	127	0.38	0.09	250.0	128	0.41	0.10	250.0
	133	0.46	0.12	250.0	134	0.48	0.12	250.0	139	0.43	0.11	250.0
	140	0.44	0.11	250.0	143	0.39	0.10	250.0	150	0.05	0.01	200.0
	161	0.39	0.10	250.0	162	0.38	0.14	370.0	163	0.37	0.14	370.0
	166	0.35	0.13	370.0	173	0.06	0.01	200.0	185	0.36	0.13	370.0
	187	0.41	0.10	250.0	188	0.35	0.13	370.0	189	0.25	0.08	300.0
	197	0.46	0.14	300.0	198	0.37	0.14	370.0	201	0.37	0.09	250.0
	202	0.40	0.10	250.0	203	0.47	0.14	300.0	204	0.36	0.13	370.0
	205	0.37	0.09	250.0	206	0.37	0.14	370.0	209	0.37	0.14	370.0
	210	0.44	0.13	300.0	211	0.43	0.13	300.0	213	0.48	0.14	300.0
	218	0.45	0.13	300.0	221	0.47	0.14	300.0	224	0.36	0.09	250.0
	225	0.36	0.09	250.0	226	0.45	0.14	300.0	227	0.36	0.13	370.0
	228	0.45	0.14	300.0	232	0.41	0.12	300.0	233	0.42	0.13	300.0
	234	0.36	0.13	370.0	235	0.36	0.09	250.0	236	0.37	0.14	370.0
	237	0.38	0.09	250.0	242	0.40	0.15	370.0	243	0.37	0.14	370.0
	244	0.37	0.14	370.0	245	0.39	0.15	370.0	246	0.39	0.15	370.0
	247	0.37	0.14	370.0	248	0.36	0.13	370.0	249	0.36	0.13	370.0
	250	0.35	0.13	370.0	265	0.33	0.08	250.0	266	0.33	0.08	250.0
	267	0.33	0.08	250.0	268	0.33	0.08	250.0	269	0.36	0.09	250.0
	270	0.35	0.09	250.0	271	0.37	0.09	250.0	272	0.37	0.09	250.0
	287	0.12	0.03	240.0	288	0.20	0.05	240.0	289	0.20	0.05	240.0
	290	0.09	0.02	240.0	308	0.39	0.15	370.0	309	0.40	0.15	370.0
50	25	0.46	0.17	370.0	26	0.44	0.16	370.0	27	0.39	0.14	370.0
	28	0.42	0.15	370.0	29	0.39	0.14	370.0	30	0.40	0.15	370.0
	31	0.42	0.16	370.0	32	0.41	0.15	370.0	33	0.42	0.15	370.0
	38	0.33	0.12	370.0	39	0.36	0.13	370.0	44	0.42	0.16	370.0
	45	0.45	0.16	370.0	48	0.42	0.16	370.0	56	0.0	0.0	200.0
	58	0.52	0.13	250.0	59	0.52	0.13	250.0	60	0.52	0.13	250.0
	61	0.53	0.13	250.0	62	0.50	0.13	250.0	63	0.53	0.13	250.0
	65	0.55	0.14	250.0	66	0.40	0.15	370.0	68	0.56	0.14	250.0
	70	0.28	0.09	300.0	107	0.51	0.15	300.0	114	0.07	0.01	200.0
	117	0.26	0.06	240.0	118	0.56	0.13	240.0	119	0.50	0.12	250.0
	120	0.69	0.17	250.0	121	0.51	0.13	250.0	122	0.56	0.13	240.0
	123	0.27	0.07	240.0	124	0.51	0.13	250.0	125	0.52	0.13	250.0
	126	0.56	0.14	250.0	127	0.53	0.13	250.0	128	0.53	0.13	250.0
	133	0.59	0.15	250.0	134	0.61	0.15	250.0	139	0.56	0.14	250.0
	140	0.58	0.14	250.0	143	0.52	0.13	250.0	150	0.06	0.01	200.0
	161	0.51	0.13	250.0	162	0.42	0.16	370.0	163	0.42	0.15	370.0
	166	0.39	0.14	370.0	173	0.07	0.01	200.0	185	0.41	0.15	370.0
	187	0.48	0.12	250.0	188	0.39	0.14	370.0	189	0.46	0.14	300.0
	197	0.51	0.15	300.0	198	0.42	0.16	370.0	201	0.50	0.13	250.0
	202	0.52	0.13	250.0	203	0.51	0.15	300.0	204	0.40	0.15	370.0
	205	0.50	0.12	250.0	206	0.41	0.15	370.0	209	0.42	0.16	370.0
	210	0.51	0.15	300.0	211	0.50	0.15	300.0	213	0.48	0.14	300.0

218	0.49	0.15	300.0	221	0.47	0.14	300.0	224	0.51	0.13	250.0
225	0.50	0.13	250.0	226	0.51	0.15	300.0	227	0.41	0.15	370.0
228	0.50	0.15	300.0	232	0.46	0.14	300.0	233	0.47	0.14	300.0
234	0.40	0.15	370.0	235	0.49	0.12	250.0	236	0.41	0.15	370.0
237	0.48	0.12	250.0	242	0.42	0.16	370.0	243	0.41	0.15	370.0
244	0.41	0.15	370.0	245	0.42	0.16	370.0	246	0.42	0.16	370.0
247	0.41	0.15	370.0	248	0.40	0.15	370.0	249	0.40	0.15	370.0
250	0.39	0.14	370.0	265	0.49	0.12	250.0	266	0.50	0.13	250.0
267	0.49	0.12	250.0	268	0.49	0.12	250.0	269	0.50	0.13	250.0
270	0.48	0.12	250.0	271	0.49	0.12	250.0	272	0.47	0.12	250.0
287	0.53	0.13	240.0	288	0.70	0.17	240.0	289	0.71	0.17	240.0
290	0.53	0.13	240.0	308	0.43	0.16	370.0	309	0.43	0.16	370.0

Cmb	**1000 etaT/h**
	1.00

RISULTATI NODALI

LEGENDA RISULTATI NODALI

Il controllo dei risultati delle analisi condotte, per quanto concerne i nodi strutturali, è possibile in relazione alle tabelle sottoriportate.

Una prima tabella riporta infatti per ogni nodo e per ogni combinazione (o caso di carico) gli spostamenti nodali.

Una seconda tabella riporta per ogni nodo a cui sia associato un vincolo rigido e/o elastico o una fondazione speciale e per ogni combinazione (o caso di carico) i valori delle azioni esercitate dalla struttura sui vincoli (reazioni vincolari cambiate di segno).

Una terza tabella, infine riassume per ogni nodo le sei combinazioni in cui si attingono i valori minimi e massimi della reazione Fz, della reazione Mx e della reazione My.

Nodo	Cmb	Traslazione X	Traslazione Y	Traslazione Z	Rotazione X	Rotazione Y	Rotazione Z
		cm	cm	cm			
1	1	0.02	0.04	-0.05	-6.55e-05	4.05e-05	1.29e-05
1	2	0.02	0.05	-0.05	-7.55e-05	4.91e-05	1.21e-05
1	3	0.03	0.05	-0.06	-7.28e-05	3.94e-05	1.48e-05
1	4	0.03	0.05	-0.06	-8.28e-05	4.80e-05	1.40e-05
1	5	0.02	0.03	-0.04	-5.20e-05	2.94e-05	8.19e-06
1	6	0.02	0.03	-0.04	-6.20e-05	3.80e-05	7.41e-06
1	7	0.02	0.04	-0.04	-5.93e-05	2.82e-05	1.00e-05
1	8	0.02	0.04	-0.05	-6.93e-05	3.69e-05	9.26e-06
1	9	0.02	0.05	-0.06	-8.55e-05	5.78e-05	1.14e-05
1	10	0.03	0.05	-0.06	-7.06e-05	3.97e-05	1.42e-05
1	11	0.03	0.05	-0.06	-9.06e-05	5.70e-05	1.27e-05
1	12	0.02	0.04	-0.04	-7.20e-05	4.67e-05	6.64e-06
1	13	0.02	0.04	-0.04	-5.71e-05	2.86e-05	9.48e-06
1	14	0.02	0.04	-0.05	-7.71e-05	4.59e-05	7.93e-06
1	15	0.17	0.10	-0.05	-1.47e-04	8.58e-05	-2.49e-05
1	16	0.20	-0.05	-0.04	8.51e-05	9.43e-05	-5.45e-05
1	17	-0.16	0.13	-0.04	-1.95e-04	-3.65e-05	7.24e-05
1	18	-0.14	-0.02	-0.04	3.71e-05	-2.79e-05	4.27e-05
1	19	0.18	0.09	-0.04	-1.35e-04	8.56e-05	-4.76e-05
1	20	0.20	-0.05	-0.04	7.28e-05	9.44e-05	-3.19e-05
1	21	-0.16	0.12	-0.04	-1.83e-04	-3.66e-05	4.97e-05
1	22	-0.14	-0.02	-0.04	2.48e-05	-2.78e-05	6.54e-05
1	23	0.13	0.08	-0.05	-1.22e-04	6.94e-05	-6.26e-05
1	24	0.16	-0.07	-0.04	1.10e-04	7.79e-05	-9.22e-05
1	25	-0.12	0.15	-0.04	-2.19e-04	-2.01e-05	1.10e-04
1	26	-0.09	-3.26e-03	-0.04	1.26e-05	-1.15e-05	8.04e-05
1	27	0.13	0.07	-0.05	-1.10e-04	6.92e-05	-8.53e-05
1	28	0.15	-0.07	-0.04	9.73e-05	7.80e-05	-6.96e-05
1	29	-0.12	0.14	-0.04	-2.07e-04	-2.02e-05	8.74e-05
1	30	-0.10	2.87e-03	-0.04	0.0	-1.14e-05	1.03e-04
1	31	0.03	0.28	-0.05	-4.35e-04	3.30e-05	4.38e-05
1	32	0.11	-0.22	-0.03	3.39e-04	6.15e-05	-5.51e-05
1	33	-0.07	0.29	-0.05	-4.49e-04	-3.68e-06	7.29e-05
1	34	9.09e-03	-0.21	-0.03	3.25e-04	2.48e-05	-2.59e-05
1	35	0.01	0.28	-0.05	-4.27e-04	2.81e-05	3.24e-05
1	36	0.10	-0.22	-0.03	3.46e-04	5.66e-05	-6.64e-05
1	37	-0.06	0.30	-0.05	-4.56e-04	1.24e-06	8.43e-05
1	38	0.02	-0.20	-0.03	3.17e-04	2.98e-05	-1.46e-05
1	39	0.04	0.26	-0.05	-3.93e-04	3.26e-05	-3.18e-05
1	40	0.10	-0.20	-0.03	2.98e-04	6.19e-05	2.05e-05
1	41	-0.07	0.27	-0.05	-4.08e-04	-4.09e-06	-2.65e-06
1	42	1.41e-04	-0.19	-0.03	2.84e-04	2.53e-05	4.97e-05
1	43	0.02	0.26	-0.05	-3.86e-04	2.77e-05	-4.31e-05
1	44	0.09	-0.20	-0.03	3.05e-04	5.70e-05	9.19e-06
1	45	-0.05	0.28	-0.05	-4.15e-04	0.0	8.67e-06
1	46	0.01	-0.18	-0.03	2.76e-04	3.02e-05	6.10e-05
1	47	-0.20	0.08	-0.04	-1.10e-04	-4.72e-05	1.19e-04
1	48	0.24	-3.13e-03	-0.04	0.0	1.05e-04	-1.01e-04
1	49	0.03	-0.35	-0.02	5.32e-04	3.63e-05	-1.12e-05
1	50	5.83e-03	0.42	-0.06	-6.42e-04	2.16e-05	2.90e-05
2	1	0.02	0.03	-0.02	9.13e-06	1.11e-04	-2.34e-05
2	2	0.02	0.03	-0.02	1.01e-05	1.11e-04	-2.28e-05
2	3	0.02	0.04	-0.02	8.30e-06	1.05e-04	-2.95e-05
2	4	0.02	0.04	-0.02	9.23e-06	1.05e-04	-2.89e-05
2	5	0.01	0.02	-0.01	8.15e-06	7.86e-05	-1.59e-05
2	6	0.01	0.02	-0.01	9.08e-06	7.84e-05	-1.53e-05

2	7	0.02	0.03	-0.01	7.32e-06	7.27e-05	-2.20e-05
2	8	0.02	0.03	-0.01	8.25e-06	7.25e-05	-2.14e-05
2	9	0.02	0.03	-0.02	1.10e-05	1.11e-04	-2.22e-05
2	10	0.02	0.03	-0.02	8.55e-06	1.07e-04	-2.77e-05
2	11	0.02	0.03	-0.02	1.04e-05	1.06e-04	-2.65e-05
2	12	0.01	0.02	-0.01	1.00e-05	7.82e-05	-1.48e-05
2	13	0.02	0.03	-0.01	7.57e-06	7.45e-05	-2.02e-05
2	14	0.02	0.03	-0.01	9.44e-06	7.41e-05	-1.90e-05
2	15	0.16	0.09	-0.02	-2.65e-05	2.85e-04	-5.97e-05
2	16	0.18	8.37e-03	-0.02	1.30e-05	2.61e-04	-8.94e-05
2	17	-0.15	0.04	-9.88e-03	2.64e-06	-1.08e-04	5.27e-05
2	18	-0.13	-0.04	-7.10e-03	4.22e-05	-1.33e-04	2.30e-05
2	19	0.16	0.10	-0.02	-3.15e-05	2.81e-04	-6.48e-05
2	20	0.18	-5.33e-03	-0.02	1.80e-05	2.66e-04	-8.44e-05
2	21	-0.15	0.05	-0.01	-2.36e-06	-1.13e-04	4.76e-05
2	22	-0.13	-0.05	-6.79e-03	4.72e-05	-1.28e-04	2.80e-05
2	23	0.13	0.12	-0.02	-4.48e-05	2.51e-04	-8.64e-05
2	24	0.15	0.04	-0.02	-5.29e-06	2.27e-04	-1.16e-04
2	25	-0.12	5.26e-03	-9.56e-03	2.09e-05	-7.41e-05	7.94e-05
2	26	-0.10	-0.07	-6.78e-03	6.05e-05	-9.88e-05	4.96e-05
2	27	0.13	0.14	-0.02	-4.98e-05	2.46e-04	-9.14e-05
2	28	0.15	0.03	-0.02	0.0	2.31e-04	-1.11e-04
2	29	-0.12	0.02	-9.88e-03	1.59e-05	-7.90e-05	7.43e-05
2	30	-0.10	-0.09	-6.47e-03	6.55e-05	-9.39e-05	5.47e-05
2	31	0.03	0.16	-0.02	-6.25e-05	1.76e-04	1.44e-05
2	32	0.09	-0.10	-9.39e-03	6.94e-05	9.43e-05	-8.48e-05
2	33	-0.06	0.15	-0.02	-5.37e-05	5.82e-05	4.81e-05
2	34	-3.28e-03	-0.12	-6.84e-03	7.81e-05	-2.39e-05	-5.11e-05
2	35	0.02	0.18	-0.02	-6.80e-05	1.66e-04	6.36e-06
2	36	0.08	-0.09	-9.48e-03	6.39e-05	8.40e-05	-9.28e-05
2	37	-0.05	0.14	-0.02	-4.82e-05	6.84e-05	5.61e-05
2	38	6.13e-03	-0.13	-6.74e-03	8.36e-05	-1.36e-05	-4.31e-05
2	39	0.04	0.21	-0.02	-7.91e-05	1.60e-04	-2.54e-06
2	40	0.08	-0.15	-8.34e-03	8.60e-05	1.10e-04	-6.79e-05
2	41	-0.06	0.20	-0.02	-7.04e-05	4.20e-05	3.12e-05
2	42	-8.72e-03	-0.16	-5.79e-03	9.48e-05	-7.68e-06	-3.42e-05
2	43	0.03	0.22	-0.02	-8.46e-05	1.50e-04	-1.05e-05
2	44	0.08	-0.14	-8.43e-03	8.05e-05	1.00e-04	-7.59e-05
2	45	-0.05	0.19	-0.02	-6.49e-05	5.23e-05	3.92e-05
2	46	6.96e-04	-0.17	-5.69e-03	1.00e-04	2.57e-06	-2.62e-05
2	47	-0.20	-0.04	-5.81e-03	4.57e-05	-1.97e-04	8.11e-05
2	48	0.22	0.09	-0.02	-3.01e-05	3.49e-04	-1.18e-04
2	49	0.02	-0.22	-4.61e-03	1.24e-04	5.89e-05	-8.01e-05
2	50	5.23e-03	0.27	-0.02	-1.09e-04	9.35e-05	4.33e-05
3	1	0.0	0.0	0.0	0.0	0.0	0.0
3	2	0.0	0.0	0.0	0.0	0.0	0.0
3	3	0.0	0.0	0.0	0.0	0.0	0.0
3	4	0.0	0.0	0.0	0.0	0.0	0.0
3	5	0.0	0.0	0.0	0.0	0.0	0.0
3	6	0.0	0.0	0.0	0.0	0.0	0.0
3	7	0.0	0.0	0.0	0.0	0.0	0.0
3	8	0.0	0.0	0.0	0.0	0.0	0.0
3	9	0.0	0.0	0.0	0.0	0.0	0.0
3	10	0.0	0.0	0.0	0.0	0.0	0.0
3	11	0.0	0.0	0.0	0.0	0.0	0.0
3	12	0.0	0.0	0.0	0.0	0.0	0.0
3	13	0.0	0.0	0.0	0.0	0.0	0.0
3	14	0.0	0.0	0.0	0.0	0.0	0.0
3	15	0.0	0.0	0.0	0.0	0.0	0.0
3	16	0.0	0.0	0.0	0.0	0.0	0.0
3	17	0.0	0.0	0.0	0.0	0.0	0.0
3	18	0.0	0.0	0.0	0.0	0.0	0.0
3	19	0.0	0.0	0.0	0.0	0.0	0.0
3	20	0.0	0.0	0.0	0.0	0.0	0.0
3	21	0.0	0.0	0.0	0.0	0.0	0.0
3	22	0.0	0.0	0.0	0.0	0.0	0.0
3	23	0.0	0.0	0.0	0.0	0.0	0.0
3	24	0.0	0.0	0.0	0.0	0.0	0.0
3	25	0.0	0.0	0.0	0.0	0.0	0.0
3	26	0.0	0.0	0.0	0.0	0.0	0.0
3	27	0.0	0.0	0.0	0.0	0.0	0.0
3	28	0.0	0.0	0.0	0.0	0.0	0.0
3	29	0.0	0.0	0.0	0.0	0.0	0.0
3	30	0.0	0.0	0.0	0.0	0.0	0.0
3	31	0.0	0.0	0.0	0.0	0.0	0.0
3	32	0.0	0.0	0.0	0.0	0.0	0.0
3	33	0.0	0.0	0.0	0.0	0.0	0.0

3	34	0.0	0.0	0.0	0.0	0.0	0.0
3	35	0.0	0.0	0.0	0.0	0.0	0.0
3	36	0.0	0.0	0.0	0.0	0.0	0.0
3	37	0.0	0.0	0.0	0.0	0.0	0.0
3	38	0.0	0.0	0.0	0.0	0.0	0.0
3	39	0.0	0.0	0.0	0.0	0.0	0.0
3	40	0.0	0.0	0.0	0.0	0.0	0.0
3	41	0.0	0.0	0.0	0.0	0.0	0.0
3	42	0.0	0.0	0.0	0.0	0.0	0.0
3	43	0.0	0.0	0.0	0.0	0.0	0.0
3	44	0.0	0.0	0.0	0.0	0.0	0.0
3	45	0.0	0.0	0.0	0.0	0.0	0.0
3	46	0.0	0.0	0.0	0.0	0.0	0.0
3	47	0.0	0.0	0.0	0.0	0.0	0.0
3	48	0.0	0.0	0.0	0.0	0.0	0.0
3	49	0.0	0.0	0.0	0.0	0.0	0.0
3	50	0.0	0.0	0.0	0.0	0.0	0.0
4	1	0.02	0.02	-0.03	4.71e-05	-7.51e-05	-8.34e-05
4	2	0.02	0.02	-0.04	4.39e-05	-9.40e-05	-8.38e-05
4	3	0.02	0.02	-0.04	4.79e-05	-7.33e-05	-9.40e-05
4	4	0.02	0.02	-0.04	4.47e-05	-9.22e-05	-9.44e-05
4	5	0.01	0.01	-0.03	3.35e-05	-5.40e-05	-6.15e-05
4	6	0.01	0.01	-0.03	3.03e-05	-7.28e-05	-6.19e-05
4	7	0.02	0.02	-0.03	3.43e-05	-5.22e-05	-7.21e-05
4	8	0.02	0.02	-0.03	3.11e-05	-7.10e-05	-7.24e-05
4	9	0.02	0.02	-0.04	4.07e-05	-1.13e-04	-8.42e-05
4	10	0.02	0.02	-0.04	4.77e-05	-7.39e-05	-9.09e-05
4	11	0.02	0.02	-0.04	4.12e-05	-1.12e-04	-9.16e-05
4	12	0.01	0.01	-0.03	2.71e-05	-9.16e-05	-6.22e-05
4	13	0.02	0.02	-0.03	3.41e-05	-5.27e-05	-6.89e-05
4	14	0.02	0.02	-0.03	2.76e-05	-9.04e-05	-6.96e-05
4	15	0.19	0.06	-0.03	-1.90e-05	2.00e-05	-1.03e-04
4	16	0.17	-0.09	-0.03	1.55e-04	7.25e-06	-6.90e-05
4	17	-0.14	0.12	-0.03	-8.76e-05	-1.14e-04	-6.24e-05
4	18	-0.17	-0.03	-0.03	8.67e-05	-1.26e-04	-2.81e-05
4	19	0.17	0.04	-0.03	9.35e-06	1.70e-05	-1.12e-04
4	20	0.19	-0.07	-0.03	1.27e-04	1.02e-05	-6.06e-05
4	21	-0.16	0.10	-0.03	-5.92e-05	-1.17e-04	-7.09e-05
4	22	-0.14	-8.57e-03	-0.03	5.83e-05	-1.23e-04	-1.97e-05
4	23	0.15	0.01	-0.03	2.25e-05	0.0	-1.28e-04
4	24	0.13	-0.13	-0.03	1.97e-04	-1.24e-05	-9.35e-05
4	25	-0.10	0.17	-0.03	-1.29e-04	-9.41e-05	-3.79e-05
4	26	-0.12	0.02	-0.02	4.52e-05	-1.07e-04	-3.61e-06
4	27	0.13	-7.00e-03	-0.03	5.09e-05	-2.63e-06	-1.36e-04
4	28	0.15	-0.12	-0.03	1.68e-04	-9.39e-06	-8.51e-05
4	29	-0.12	0.15	-0.03	-1.01e-04	-9.71e-05	-4.64e-05
4	30	-0.10	0.04	-0.03	1.68e-05	-1.04e-04	4.83e-06
4	31	0.11	0.25	-0.03	-2.46e-04	-1.20e-05	-1.29e-04
4	32	0.02	-0.23	-0.02	3.35e-04	-5.44e-05	-1.47e-05
4	33	6.72e-03	0.27	-0.03	-2.67e-04	-5.21e-05	-1.17e-04
4	34	-0.08	-0.22	-0.02	3.14e-04	-9.45e-05	-2.42e-06
4	35	0.09	0.23	-0.03	-2.34e-04	-1.79e-05	-1.36e-04
4	36	8.53e-03	-0.25	-0.02	3.47e-04	-6.03e-05	-2.20e-05
4	37	0.02	0.28	-0.03	-2.79e-04	-4.62e-05	-1.09e-04
4	38	-0.07	-0.20	-0.02	3.02e-04	-8.86e-05	4.94e-06
4	39	0.03	0.19	-0.03	-1.52e-04	-2.19e-05	-1.57e-04
4	40	0.10	-0.18	-0.02	2.40e-04	-4.45e-05	1.34e-05
4	41	-0.07	0.21	-0.03	-1.72e-04	-6.20e-05	-1.45e-04
4	42	-4.38e-03	-0.16	-0.02	2.19e-04	-8.46e-05	2.57e-05
4	43	0.02	0.17	-0.03	-1.39e-04	-2.78e-05	-1.65e-04
4	44	0.08	-0.19	-0.02	2.52e-04	-5.03e-05	6.09e-06
4	45	-0.06	0.22	-0.03	-1.85e-04	-5.62e-05	-1.38e-04
4	46	8.65e-03	-0.14	-0.02	2.07e-04	-7.87e-05	3.31e-05
4	47	-0.20	0.10	-0.03	-5.04e-05	-1.34e-04	-1.18e-05
4	48	0.23	-0.07	-0.03	1.18e-04	2.75e-05	-1.20e-04
4	49	0.03	-0.32	-0.02	4.20e-04	-6.40e-05	4.48e-05
4	50	1.33e-03	0.35	-0.03	-3.52e-04	-4.25e-05	-1.76e-04
5	1	0.02	0.03	-0.03	6.91e-05	8.91e-05	7.87e-05
5	2	0.02	0.03	-0.03	6.88e-05	8.90e-05	7.74e-05
5	3	0.02	0.04	-0.04	7.00e-05	9.21e-05	9.11e-05
5	4	0.02	0.04	-0.04	6.98e-05	9.20e-05	8.97e-05
5	5	0.01	0.02	-0.02	5.07e-05	6.57e-05	5.77e-05
5	6	0.01	0.02	-0.02	5.05e-05	6.56e-05	5.63e-05
5	7	0.02	0.03	-0.03	5.17e-05	6.88e-05	7.00e-05
5	8	0.02	0.03	-0.03	5.14e-05	6.86e-05	6.86e-05
5	9	0.02	0.03	-0.03	6.86e-05	8.88e-05	7.60e-05
5	10	0.02	0.03	-0.03	6.98e-05	9.12e-05	8.74e-05

5	11	0.02	0.03	-0.04	6.93e-05	9.10e-05	8.46e-05
5	12	0.01	0.02	-0.02	5.02e-05	6.55e-05	5.49e-05
5	13	0.02	0.03	-0.03	5.14e-05	6.78e-05	6.63e-05
5	14	0.02	0.03	-0.03	5.09e-05	6.76e-05	6.36e-05
5	15	0.18	0.09	-0.03	4.13e-05	1.48e-04	6.18e-05
5	16	0.15	9.10e-03	-0.03	9.42e-05	1.35e-04	2.64e-05
5	17	-0.12	0.04	-0.02	7.96e-06	-1.11e-06	9.88e-05
5	18	-0.15	-0.04	-0.02	6.09e-05	-1.43e-05	6.34e-05
5	19	0.16	0.10	-0.03	2.94e-05	1.45e-04	5.24e-05
5	20	0.17	-4.62e-03	-0.03	1.06e-04	1.38e-04	3.58e-05
5	21	-0.14	0.05	-0.03	-3.91e-06	-4.49e-06	8.94e-05
5	22	-0.13	-0.05	-0.02	7.28e-05	-1.09e-05	7.28e-05
5	23	0.14	0.12	-0.03	-1.47e-05	1.30e-04	3.72e-05
5	24	0.11	0.04	-0.03	3.82e-05	1.17e-04	1.78e-06
5	25	-0.09	5.41e-03	-0.03	6.39e-05	1.70e-05	1.23e-04
5	26	-0.11	-0.07	-0.02	1.17e-04	3.90e-06	8.80e-05
5	27	0.12	0.14	-0.03	-2.66e-05	1.27e-04	2.78e-05
5	28	0.13	0.03	-0.03	5.01e-05	1.20e-04	1.12e-05
5	29	-0.11	0.02	-0.03	5.21e-05	1.37e-05	1.14e-04
5	30	-0.09	-0.09	-0.02	1.29e-04	7.28e-06	9.74e-05
5	31	0.10	0.17	-0.03	-3.22e-05	1.11e-04	1.16e-04
5	32	0.02	-0.10	-0.02	1.44e-04	6.74e-05	-1.96e-06
5	33	7.39e-03	0.15	-0.03	-4.21e-05	6.64e-05	1.27e-04
5	34	-0.07	-0.12	-0.02	1.34e-04	2.26e-05	9.14e-06
5	35	0.09	0.18	-0.03	-4.90e-05	1.06e-04	1.09e-04
5	36	0.01	-0.09	-0.02	1.28e-04	6.20e-05	-9.35e-06
5	37	0.02	0.14	-0.03	-2.54e-05	7.19e-05	1.35e-04
5	38	-0.06	-0.13	-0.02	1.51e-04	2.81e-05	1.65e-05
5	39	0.03	0.21	-0.03	-7.17e-05	9.99e-05	8.47e-05
5	40	0.09	-0.15	-0.02	1.84e-04	7.87e-05	2.94e-05
5	41	-0.06	0.20	-0.03	-8.17e-05	5.52e-05	9.58e-05
5	42	-1.12e-03	-0.16	-0.02	1.74e-04	3.39e-05	4.05e-05
5	43	0.02	0.22	-0.03	-8.85e-05	9.45e-05	7.73e-05
5	44	0.08	-0.14	-0.02	1.67e-04	7.32e-05	2.21e-05
5	45	-0.05	0.19	-0.03	-6.49e-05	6.06e-05	1.03e-04
5	46	0.01	-0.17	-0.02	1.91e-04	3.94e-05	4.79e-05
5	47	-0.18	-0.05	-0.02	9.56e-05	-3.10e-05	1.13e-04
5	48	0.21	0.09	-0.03	6.53e-06	1.65e-04	1.27e-05
5	49	0.03	-0.22	-0.02	2.20e-04	5.50e-05	-5.17e-06
5	50	3.96e-03	0.27	-0.03	-1.18e-04	7.88e-05	1.30e-04
6	1	0.02	0.03	-0.02	-1.29e-04	8.90e-05	-4.65e-05
6	2	0.02	0.03	-0.02	-1.29e-04	9.29e-05	-4.47e-05
6	3	0.03	0.04	-0.02	-1.47e-04	9.98e-05	-6.47e-05
6	4	0.03	0.04	-0.02	-1.47e-04	1.04e-04	-6.29e-05
6	5	0.02	0.02	-0.01	-9.42e-05	6.52e-05	-3.25e-05
6	6	0.02	0.02	-0.02	-9.48e-05	6.90e-05	-3.07e-05
6	7	0.02	0.03	-0.02	-1.12e-04	7.59e-05	-5.07e-05
6	8	0.02	0.03	-0.02	-1.13e-04	7.98e-05	-4.89e-05
6	9	0.02	0.03	-0.02	-1.30e-04	9.67e-05	-4.29e-05
6	10	0.02	0.04	-0.02	-1.41e-04	9.65e-05	-5.93e-05
6	11	0.03	0.04	-0.02	-1.43e-04	1.04e-04	-5.57e-05
6	12	0.02	0.02	-0.02	-9.54e-05	7.28e-05	-2.89e-05
6	13	0.02	0.03	-0.02	-1.07e-04	7.27e-05	-4.52e-05
6	14	0.02	0.03	-0.02	-1.08e-04	8.04e-05	-4.16e-05
6	15	0.17	0.09	-0.03	-2.14e-04	3.41e-04	-1.11e-04
6	16	0.14	0.01	-0.02	-7.52e-05	2.80e-04	-1.63e-04
6	17	-0.10	0.04	-7.44e-03	-1.28e-04	-1.41e-04	8.29e-05
6	18	-0.14	-0.04	7.22e-04	1.11e-05	-2.02e-04	3.18e-05
6	19	0.14	0.11	-0.03	-2.38e-04	2.87e-04	-9.47e-05
6	20	0.17	-2.36e-03	-0.02	-5.15e-05	3.34e-04	-1.79e-04
6	21	-0.13	0.06	-6.83e-03	-1.51e-04	-1.95e-04	9.96e-05
6	22	-0.11	-0.05	1.06e-04	3.48e-05	-1.48e-04	1.51e-05
6	23	0.13	0.13	-0.03	-2.77e-04	2.59e-04	-7.99e-05
6	24	0.09	0.05	-0.02	-1.38e-04	1.98e-04	-1.31e-04
6	25	-0.06	7.58e-03	-9.95e-03	-6.51e-05	-5.93e-05	5.16e-05
6	26	-0.09	-0.07	-1.78e-03	7.38e-05	-1.20e-04	0.0
6	27	0.10	0.14	-0.03	-3.01e-04	2.05e-04	-6.33e-05
6	28	0.12	0.03	-0.02	-1.14e-04	2.52e-04	-1.48e-04
6	29	-0.09	0.02	-9.33e-03	-8.88e-05	-1.13e-04	6.82e-05
6	30	-0.06	-0.09	-2.40e-03	9.75e-05	-6.60e-05	-1.63e-05
6	31	0.12	0.17	-0.03	-3.46e-04	2.43e-04	1.64e-05
6	32	-2.06e-04	-0.10	-5.86e-03	1.17e-04	4.07e-05	-1.54e-04
6	33	0.03	0.15	-0.03	-3.20e-04	9.82e-05	7.47e-05
6	34	-0.08	-0.12	1.58e-03	1.43e-04	-1.04e-04	-9.60e-05
6	35	0.10	0.18	-0.03	-3.65e-04	2.18e-04	2.58e-05
6	36	-0.01	-0.09	-5.11e-03	9.82e-05	1.60e-05	-1.45e-04
6	37	0.05	0.14	-0.03	-3.01e-04	1.23e-04	6.53e-05

6	38	-0.07	-0.13	8.23e-04	1.62e-04	-7.94e-05	-1.05e-04
6	39	0.02	0.22	-0.03	-4.25e-04	6.30e-05	7.19e-05
6	40	0.10	-0.15	-7.91e-03	1.96e-04	2.21e-04	-2.10e-04
6	41	-0.07	0.20	-0.02	-3.99e-04	-8.17e-05	1.30e-04
6	42	0.02	-0.16	-4.79e-04	2.22e-04	7.59e-05	-1.51e-04
6	43	1.81e-03	0.23	-0.03	-4.44e-04	3.84e-05	8.13e-05
6	44	0.09	-0.14	-7.16e-03	1.77e-04	1.96e-04	-2.00e-04
6	45	-0.05	0.19	-0.02	-3.80e-04	-5.71e-05	1.21e-04
6	46	0.03	-0.17	-1.23e-03	2.41e-04	1.01e-04	-1.61e-04
6	47	-0.14	-0.04	1.12e-03	2.22e-05	-2.13e-04	7.22e-05
6	48	0.18	0.10	-0.03	-2.25e-04	3.52e-04	-1.52e-04
6	49	-4.10e-04	-0.22	4.28e-03	3.24e-04	9.79e-05	-2.10e-04
6	50	0.03	0.28	-0.04	-5.27e-04	4.10e-05	1.30e-04
7	1	0.02	-2.80e-04	-0.03	5.10e-05	6.99e-05	-3.97e-06
7	2	0.02	-7.43e-05	-0.03	5.06e-05	7.01e-05	-3.95e-06
7	3	0.02	4.34e-03	-0.03	3.44e-05	7.18e-05	-1.80e-06
7	4	0.02	4.54e-03	-0.03	3.40e-05	7.20e-05	-1.79e-06
7	5	0.01	4.55e-04	-0.02	3.46e-05	4.93e-05	-3.16e-06
7	6	0.01	6.60e-04	-0.02	3.42e-05	4.96e-05	-3.14e-06
7	7	0.02	5.07e-03	-0.02	1.80e-05	5.12e-05	0.0
7	8	0.02	5.28e-03	-0.02	1.76e-05	5.15e-05	0.0
7	9	0.02	1.32e-04	-0.03	5.02e-05	7.03e-05	-3.94e-06
7	10	0.02	2.95e-03	-0.03	3.94e-05	7.12e-05	-2.45e-06
7	11	0.02	3.36e-03	-0.03	3.86e-05	7.17e-05	-2.42e-06
7	12	0.01	8.66e-04	-0.02	3.37e-05	4.98e-05	-3.13e-06
7	13	0.02	3.69e-03	-0.02	2.30e-05	5.07e-05	-1.64e-06
7	14	0.02	4.10e-03	-0.02	2.21e-05	5.12e-05	-1.61e-06
7	15	0.17	0.05	-0.04	-4.42e-05	4.88e-04	7.49e-05
7	16	0.18	-0.06	-0.04	1.49e-04	4.24e-04	4.22e-05
7	17	-0.16	0.06	-5.85e-03	-9.36e-05	-3.24e-04	-4.68e-05
7	18	-0.14	-0.05	-8.92e-03	1.00e-04	-3.88e-04	-7.95e-05
7	19	0.17	0.06	-0.03	-5.11e-05	4.34e-04	4.84e-05
7	20	0.18	-0.06	-0.04	1.56e-04	4.78e-04	6.87e-05
7	21	-0.16	0.06	-4.33e-03	-1.00e-04	-3.78e-04	-7.33e-05
7	22	-0.14	-0.05	-0.01	1.07e-04	-3.34e-04	-5.30e-05
7	23	0.13	0.05	-0.03	-3.96e-05	4.27e-04	5.69e-05
7	24	0.15	-0.06	-0.04	1.54e-04	3.62e-04	2.42e-05
7	25	-0.12	0.06	-8.01e-03	-9.82e-05	-2.62e-04	-2.87e-05
7	26	-0.11	-0.05	-0.01	9.54e-05	-3.27e-04	-6.15e-05
7	27	0.14	0.05	-0.03	-4.64e-05	3.73e-04	3.04e-05
7	28	0.15	-0.06	-0.04	1.61e-04	4.17e-04	5.07e-05
7	29	-0.12	0.06	-6.49e-03	-1.05e-04	-3.16e-04	-5.53e-05
7	30	-0.11	-0.05	-0.01	1.02e-04	-2.73e-04	-3.50e-05
7	31	0.03	0.18	-0.02	-2.87e-04	2.80e-04	7.06e-05
7	32	0.09	-0.18	-0.03	3.58e-04	6.42e-05	-3.86e-05
7	33	-0.07	0.19	-0.01	-3.02e-04	3.60e-05	3.41e-05
7	34	-2.90e-03	-0.18	-0.02	3.43e-04	-1.79e-04	-7.51e-05
7	35	0.02	0.18	-0.02	-2.86e-04	2.61e-04	6.52e-05
7	36	0.08	-0.18	-0.03	3.60e-04	4.58e-05	-4.40e-05
7	37	-0.06	0.19	-0.01	-3.04e-04	5.44e-05	3.95e-05
7	38	6.87e-03	-0.18	-0.02	3.42e-04	-1.61e-04	-6.97e-05
7	39	0.04	0.19	-0.02	-3.10e-04	9.89e-05	-1.78e-05
7	40	0.09	-0.18	-0.04	3.81e-04	2.45e-04	4.98e-05
7	41	-0.06	0.19	-7.85e-03	-3.25e-04	-1.45e-04	-5.43e-05
7	42	-9.46e-03	-0.18	-0.03	3.66e-04	1.32e-06	1.33e-05
7	43	0.03	0.19	-0.02	-3.09e-04	8.05e-05	-2.32e-05
7	44	0.08	-0.19	-0.04	3.82e-04	2.26e-04	4.44e-05
7	45	-0.05	0.19	-8.50e-03	-3.27e-04	-1.26e-04	-4.89e-05
7	46	3.17e-04	-0.18	-0.03	3.65e-04	1.97e-05	1.87e-05
7	47	-0.21	5.57e-03	-1.19e-03	-7.80e-06	-5.21e-04	-6.56e-05
7	48	0.23	-9.66e-04	-0.04	6.37e-05	6.21e-04	6.10e-05
7	49	0.02	-0.29	-0.03	5.61e-04	1.31e-05	-2.19e-05
7	50	5.23e-03	0.30	-0.01	-5.05e-04	8.71e-05	1.73e-05
8	1	0.02	0.03	-0.03	2.86e-05	4.99e-05	2.44e-05
8	2	0.02	0.03	-0.03	2.82e-05	5.01e-05	2.45e-05
8	3	0.02	0.04	-0.03	1.48e-05	5.08e-05	2.51e-05
8	4	0.02	0.04	-0.03	1.45e-05	5.11e-05	2.52e-05
8	5	0.01	0.02	-0.02	1.94e-05	3.50e-05	1.78e-05
8	6	0.01	0.02	-0.02	1.90e-05	3.52e-05	1.80e-05
8	7	0.02	0.03	-0.02	5.68e-06	3.60e-05	1.85e-05
8	8	0.02	0.03	-0.02	5.30e-06	3.62e-05	1.86e-05
8	9	0.02	0.03	-0.03	2.78e-05	5.04e-05	2.47e-05
8	10	0.02	0.04	-0.03	1.90e-05	5.05e-05	2.49e-05
8	11	0.02	0.04	-0.03	1.82e-05	5.10e-05	2.52e-05
8	12	0.01	0.03	-0.02	1.87e-05	3.55e-05	1.81e-05
8	13	0.02	0.03	-0.02	9.81e-06	3.57e-05	1.83e-05
8	14	0.02	0.03	-0.02	9.03e-06	3.62e-05	1.86e-05

8	15	0.16	0.07	-0.03	-8.21e-05	3.91e-04	-1.97e-05
8	16	0.18	-0.03	-0.03	1.30e-04	3.44e-04	-3.21e-05
8	17	-0.15	0.09	-0.01	-1.02e-04	-2.74e-04	6.83e-05
8	18	-0.13	-0.01	-0.02	1.10e-04	-3.20e-04	5.59e-05
8	19	0.18	0.06	-0.03	-7.55e-05	3.49e-04	-3.63e-05
8	20	0.16	-0.03	-0.03	1.23e-04	3.86e-04	-1.56e-05
8	21	-0.13	0.08	-0.01	-9.56e-05	-3.16e-04	5.18e-05
8	22	-0.15	-9.98e-03	-0.02	1.03e-04	-2.78e-04	7.25e-05
8	23	0.13	0.05	-0.03	-5.02e-05	3.39e-04	-4.75e-05
8	24	0.15	-0.05	-0.03	1.62e-04	2.92e-04	-5.99e-05
8	25	-0.12	0.10	-0.02	-1.34e-04	-2.21e-04	9.61e-05
8	26	-0.10	1.56e-03	-0.02	7.81e-05	-2.68e-04	8.37e-05
8	27	0.15	0.05	-0.03	-4.36e-05	2.97e-04	-6.40e-05
8	28	0.13	-0.04	-0.03	1.55e-04	3.34e-04	-4.33e-05
8	29	-0.10	0.10	-0.01	-1.27e-04	-2.63e-04	7.95e-05
8	30	-0.12	5.07e-03	-0.02	7.14e-05	-2.26e-04	1.00e-04
8	31	0.03	0.19	-0.02	-3.37e-04	2.13e-04	2.55e-05
8	32	0.09	-0.14	-0.03	3.71e-04	5.74e-05	-1.57e-05
8	33	-0.06	0.20	-0.02	-3.43e-04	1.33e-05	5.19e-05
8	34	-2.90e-03	-0.14	-0.02	3.65e-04	-1.42e-04	1.07e-05
8	35	0.02	0.19	-0.02	-3.27e-04	1.97e-04	1.72e-05
8	36	0.08	-0.15	-0.03	3.80e-04	4.17e-05	-2.41e-05
8	37	-0.05	0.20	-0.02	-3.52e-04	2.90e-05	6.03e-05
8	38	6.56e-03	-0.13	-0.02	3.55e-04	-1.26e-04	1.90e-05
8	39	0.08	0.18	-0.02	-3.15e-04	7.27e-05	-2.96e-05
8	40	0.04	-0.13	-0.03	3.49e-04	1.97e-04	3.94e-05
8	41	-8.74e-03	0.19	-0.02	-3.21e-04	-1.27e-04	-3.18e-06
8	42	-0.06	-0.13	-0.03	3.42e-04	-1.94e-06	6.58e-05
8	43	0.08	0.18	-0.02	-3.05e-04	5.70e-05	-3.79e-05
8	44	0.03	-0.14	-0.03	3.58e-04	1.82e-04	3.10e-05
8	45	7.20e-04	0.19	-0.02	-3.30e-04	-1.11e-04	5.15e-06
8	46	-0.05	-0.12	-0.03	3.33e-04	1.38e-05	7.41e-05
8	47	-0.20	0.05	-0.01	-2.65e-05	-4.33e-04	1.12e-04
8	48	0.22	-6.96e-05	-0.03	5.43e-05	5.03e-04	-7.53e-05
8	49	0.02	-0.23	-0.03	5.62e-04	5.57e-05	4.04e-05
8	50	5.51e-03	0.29	-0.02	-5.34e-04	1.51e-05	-4.22e-06
9	1	0.02	0.03	-0.02	-6.68e-05	7.96e-05	0.0
9	2	0.02	0.03	-0.02	-6.73e-05	7.99e-05	1.17e-06
9	3	0.02	0.04	-0.02	-7.87e-05	8.12e-05	2.28e-06
9	4	0.02	0.04	-0.02	-7.92e-05	8.15e-05	2.62e-06
9	5	0.01	0.02	-0.01	-4.91e-05	5.60e-05	1.08e-06
9	6	0.01	0.02	-0.01	-4.95e-05	5.64e-05	1.43e-06
9	7	0.02	0.03	-0.01	-6.10e-05	5.77e-05	2.54e-06
9	8	0.02	0.03	-0.01	-6.15e-05	5.80e-05	2.88e-06
9	9	0.02	0.03	-0.02	-6.78e-05	8.03e-05	1.51e-06
9	10	0.02	0.04	-0.02	-7.52e-05	8.07e-05	1.85e-06
9	11	0.02	0.04	-0.02	-7.61e-05	8.14e-05	2.53e-06
9	12	0.01	0.02	-0.01	-5.00e-05	5.67e-05	1.77e-06
9	13	0.02	0.03	-0.01	-5.74e-05	5.72e-05	2.10e-06
9	14	0.02	0.03	-0.01	-5.84e-05	5.79e-05	2.79e-06
9	15	0.16	0.06	-0.02	-1.83e-04	4.09e-04	-1.22e-04
9	16	0.18	-0.04	-0.02	3.37e-05	3.65e-04	-1.35e-04
9	17	-0.15	0.09	-1.58e-03	-1.41e-04	-2.51e-04	1.38e-04
9	18	-0.13	-0.01	-9.08e-03	7.51e-05	-2.95e-04	1.26e-04
9	19	0.18	0.05	-0.02	-1.68e-04	3.65e-04	-1.23e-04
9	20	0.16	-0.03	-0.03	1.94e-05	4.08e-04	-1.35e-04
9	21	-0.13	0.08	-1.25e-03	-1.27e-04	-2.95e-04	1.38e-04
9	22	-0.15	-3.31e-03	-9.41e-03	6.07e-05	-2.52e-04	1.26e-04
9	23	0.13	0.04	-0.02	-7.34e-05	3.59e-04	-1.36e-04
9	24	0.15	-0.07	-0.03	1.43e-04	3.15e-04	-1.48e-04
9	25	-0.12	0.12	5.65e-04	-2.51e-04	-2.02e-04	1.52e-04
9	26	-0.10	8.84e-03	-6.94e-03	-3.43e-05	-2.46e-04	1.39e-04
9	27	0.15	0.03	-0.02	-5.91e-05	3.16e-04	-1.36e-04
9	28	0.13	-0.06	-0.03	1.29e-04	3.59e-04	-1.48e-04
9	29	-0.10	0.11	8.91e-04	-2.36e-04	-2.45e-04	1.51e-04
9	30	-0.12	0.02	-7.26e-03	-4.86e-05	-2.03e-04	1.39e-04
9	31	0.03	0.20	-3.16e-03	-4.21e-04	2.29e-04	-1.60e-05
9	32	0.09	-0.16	-0.03	3.01e-04	8.23e-05	-5.88e-05
9	33	-0.06	0.21	1.61e-03	-4.08e-04	3.11e-05	6.22e-05
9	34	-2.58e-03	-0.15	-0.02	3.13e-04	-1.16e-04	1.94e-05
9	35	0.02	0.19	-3.80e-03	-3.88e-04	2.14e-04	-2.00e-05
9	36	0.08	-0.17	-0.03	3.34e-04	6.75e-05	-6.28e-05
9	37	-0.05	0.22	2.26e-03	-4.41e-04	4.59e-05	6.62e-05
9	38	6.77e-03	-0.14	-0.02	2.80e-04	-1.01e-04	2.34e-05
9	39	0.08	0.17	-2.07e-03	-3.73e-04	8.48e-05	-1.76e-05
9	40	0.04	-0.12	-0.03	2.53e-04	2.27e-04	-5.72e-05
9	41	-8.24e-03	0.17	2.70e-03	-3.61e-04	-1.13e-04	6.06e-05

9	42	-0.06	-0.12	-0.02	2.65e-04	2.86e-05	2.09e-05
9	43	0.08	0.16	-2.71e-03	-3.40e-04	7.00e-05	-2.16e-05
9	44	0.03	-0.13	-0.03	2.86e-04	2.12e-04	-6.13e-05
9	45	1.11e-03	0.18	3.34e-03	-3.93e-04	-9.84e-05	6.46e-05
9	46	-0.05	-0.11	-0.02	2.33e-04	4.34e-05	2.50e-05
9	47	-0.20	0.07	8.46e-04	-1.38e-04	-4.10e-04	2.05e-04
9	48	0.22	-0.02	-0.03	3.04e-05	5.24e-04	-2.02e-04
9	49	0.02	-0.24	-0.03	4.85e-04	7.57e-05	-1.16e-05
9	50	5.82e-03	0.29	7.48e-03	-5.93e-04	3.76e-05	1.50e-05
10	1	0.02	0.03	-0.01	7.80e-06	-3.36e-05	3.15e-05
10	2	0.02	0.03	-0.01	8.84e-06	-3.24e-05	3.09e-05
10	3	0.02	0.04	-0.02	7.03e-06	-1.58e-05	3.73e-05
10	4	0.02	0.04	-0.02	8.07e-06	-1.46e-05	3.67e-05
10	5	0.01	0.02	-0.01	7.21e-06	-2.31e-05	2.15e-05
10	6	0.01	0.02	-0.01	8.24e-06	-2.19e-05	2.09e-05
10	7	0.02	0.03	-0.01	6.44e-06	-5.27e-06	2.73e-05
10	8	0.02	0.03	-0.01	7.47e-06	-4.09e-06	2.67e-05
10	9	0.02	0.03	-0.01	9.87e-06	-3.12e-05	3.03e-05
10	10	0.02	0.04	-0.02	7.26e-06	-2.11e-05	3.55e-05
10	11	0.02	0.04	-0.02	9.33e-06	-1.88e-05	3.43e-05
10	12	0.01	0.02	-0.01	9.28e-06	-2.07e-05	2.03e-05
10	13	0.02	0.03	-0.01	6.67e-06	-1.06e-05	2.55e-05
10	14	0.02	0.03	-0.01	8.74e-06	-8.26e-06	2.43e-05
10	15	0.16	0.06	-9.26e-03	-6.68e-06	1.57e-04	-3.35e-05
10	16	0.18	-0.05	-5.77e-03	4.43e-05	1.74e-04	-1.68e-05
10	17	-0.15	0.10	-0.02	-3.05e-05	-2.06e-04	6.44e-05
10	18	-0.13	-5.30e-03	-0.01	2.05e-05	-1.89e-04	8.11e-05
10	19	0.18	0.05	-8.98e-03	-2.31e-06	1.55e-04	-3.70e-05
10	20	0.16	-0.04	-6.05e-03	3.99e-05	1.76e-04	-1.33e-05
10	21	-0.13	0.09	-0.02	-2.61e-05	-2.08e-04	6.09e-05
10	22	-0.15	6.56e-03	-0.01	1.61e-05	-1.87e-04	8.45e-05
10	23	0.13	0.02	-8.73e-03	1.29e-05	1.26e-04	-6.10e-05
10	24	0.15	-0.09	-5.24e-03	6.39e-05	1.44e-04	-4.44e-05
10	25	-0.12	0.14	-0.02	-5.01e-05	-1.76e-04	9.19e-05
10	26	-0.10	0.03	-0.01	0.0	-1.58e-04	1.09e-04
10	27	0.15	6.86e-03	-8.45e-03	1.73e-05	1.25e-04	-6.45e-05
10	28	0.13	-0.08	-5.52e-03	5.95e-05	1.45e-04	-4.09e-05
10	29	-0.10	0.13	-0.02	-4.57e-05	-1.77e-04	8.85e-05
10	30	-0.12	0.05	-0.01	-3.47e-06	-1.57e-04	1.12e-04
10	31	0.03	0.20	-0.02	-7.45e-05	9.10e-06	-1.87e-05
10	32	0.09	-0.16	-4.23e-03	9.54e-05	6.79e-05	3.69e-05
10	33	-0.06	0.22	-0.02	-8.16e-05	-9.98e-05	1.06e-05
10	34	-2.62e-03	-0.15	-6.39e-03	8.83e-05	-4.10e-05	6.63e-05
10	35	0.02	0.19	-0.02	-6.86e-05	0.0	-2.70e-05
10	36	0.08	-0.18	-4.07e-03	1.01e-04	5.87e-05	2.87e-05
10	37	-0.05	0.23	-0.02	-8.75e-05	-9.06e-05	1.89e-05
10	38	6.75e-03	-0.14	-6.55e-03	8.24e-05	-3.18e-05	7.46e-05
10	39	0.08	0.16	-0.01	-5.99e-05	4.12e-06	-3.03e-05
10	40	0.04	-0.12	-5.16e-03	8.08e-05	7.29e-05	4.85e-05
10	41	-8.26e-03	0.18	-0.02	-6.70e-05	-1.05e-04	0.0
10	42	-0.06	-0.11	-7.33e-03	7.37e-05	-3.60e-05	7.78e-05
10	43	0.08	0.15	-0.01	-5.40e-05	-5.08e-06	-3.85e-05
10	44	0.03	-0.14	-5.00e-03	8.67e-05	6.37e-05	4.02e-05
10	45	1.10e-03	0.19	-0.02	-7.29e-05	-9.56e-05	7.37e-06
10	46	-0.05	-0.10	-7.49e-03	6.78e-05	-2.68e-05	8.61e-05
10	47	-0.20	0.10	-0.02	-2.73e-05	-2.68e-04	1.14e-04
10	48	0.22	-0.05	-5.02e-03	4.11e-05	2.36e-04	-6.64e-05
10	49	0.02	-0.23	-2.62e-03	1.31e-04	2.35e-06	6.57e-05
10	50	5.84e-03	0.29	-0.02	-1.17e-04	-3.43e-05	-1.81e-05
11	1	0.04	0.03	-0.03	4.83e-04	1.82e-04	2.16e-04
11	2	0.04	0.03	-0.03	4.83e-04	1.82e-04	2.16e-04
11	3	0.04	0.04	-0.03	4.83e-04	1.81e-04	2.16e-04
11	4	0.04	0.04	-0.03	4.83e-04	1.81e-04	2.16e-04
11	5	0.03	0.02	-0.02	3.45e-04	1.26e-04	1.54e-04
11	6	0.03	0.03	-0.02	3.45e-04	1.26e-04	1.54e-04
11	7	0.03	0.03	-0.02	3.45e-04	1.25e-04	1.54e-04
11	8	0.03	0.03	-0.02	3.45e-04	1.25e-04	1.54e-04
11	9	0.04	0.03	-0.03	4.83e-04	1.82e-04	2.16e-04
11	10	0.04	0.04	-0.03	4.83e-04	1.82e-04	2.16e-04
11	11	0.04	0.04	-0.03	4.83e-04	1.82e-04	2.16e-04
11	12	0.03	0.03	-0.02	3.45e-04	1.26e-04	1.54e-04
11	13	0.03	0.03	-0.02	3.45e-04	1.25e-04	1.54e-04
11	14	0.03	0.03	-0.02	3.45e-04	1.25e-04	1.54e-04
11	15	0.32	0.11	-0.03	3.12e-04	3.78e-04	1.37e-04
11	16	0.34	-0.03	-0.03	3.54e-04	4.07e-04	1.00e-04
11	17	-0.29	0.08	-0.01	3.35e-04	-1.56e-04	2.08e-04
11	18	-0.26	-0.06	-0.01	3.77e-04	-1.27e-04	1.71e-04

11	19	0.34	0.12	-0.03	3.10e-04	4.01e-04	1.11e-04
11	20	0.32	-0.04	-0.03	3.57e-04	3.84e-04	1.26e-04
11	21	-0.27	0.09	-0.01	3.32e-04	-1.33e-04	1.81e-04
11	22	-0.28	-0.06	-0.01	3.80e-04	-1.50e-04	1.97e-04
11	23	0.33	0.13	-0.03	3.05e-04	3.41e-04	7.58e-05
11	24	0.36	-0.01	-0.03	3.47e-04	3.70e-04	3.89e-05
11	25	-0.30	0.07	-0.01	3.42e-04	-1.19e-04	2.69e-04
11	26	-0.28	-0.07	-0.01	3.84e-04	-8.98e-05	2.32e-04
11	27	0.35	0.14	-0.03	3.02e-04	3.64e-04	4.95e-05
11	28	0.33	-0.02	-0.03	3.50e-04	3.46e-04	6.52e-05
11	29	-0.28	0.08	-0.01	3.40e-04	-9.55e-05	2.43e-04
11	30	-0.30	-0.08	-0.01	3.87e-04	-1.13e-04	2.58e-04
11	31	0.08	0.26	-0.02	2.71e-04	1.57e-04	2.05e-04
11	32	0.16	-0.20	-0.02	4.11e-04	2.54e-04	8.17e-05
11	33	-0.10	0.26	-0.02	2.78e-04	-3.18e-06	2.26e-04
11	34	-0.02	-0.21	-0.02	4.18e-04	9.39e-05	1.03e-04
11	35	0.08	0.27	-0.02	2.69e-04	1.46e-04	1.87e-04
11	36	0.16	-0.20	-0.02	4.09e-04	2.43e-04	6.33e-05
11	37	-0.10	0.25	-0.02	2.80e-04	7.96e-06	2.44e-04
11	38	-0.03	-0.21	-0.02	4.20e-04	1.05e-04	1.21e-04
11	39	0.15	0.29	-0.02	2.62e-04	2.35e-04	1.17e-04
11	40	0.09	-0.23	-0.02	4.21e-04	1.76e-04	1.69e-04
11	41	-0.03	0.29	-0.02	2.69e-04	7.50e-05	1.38e-04
11	42	-0.09	-0.24	-0.02	4.27e-04	1.57e-05	1.91e-04
11	43	0.15	0.30	-0.02	2.60e-04	2.24e-04	9.88e-05
11	44	0.09	-0.23	-0.02	4.18e-04	1.65e-04	1.51e-04
11	45	-0.03	0.28	-0.02	2.71e-04	8.61e-05	1.57e-04
11	46	-0.10	-0.24	-0.02	4.30e-04	2.69e-05	2.09e-04
11	47	-0.46	-7.34e-03	-0.01	3.68e-04	-2.44e-04	2.63e-04
11	48	0.51	0.06	-0.03	3.22e-04	4.95e-04	4.49e-05
11	49	0.04	-0.37	-0.02	4.64e-04	1.45e-04	1.21e-04
11	50	0.02	0.42	-0.02	2.26e-04	1.06e-04	1.87e-04
12	1	7.85e-05	1.07e-04	-3.55e-03	-4.22e-06	1.56e-05	-1.74e-06
12	2	7.85e-05	1.01e-04	-3.55e-03	-4.18e-06	1.56e-05	-1.77e-06
12	3	1.07e-04	3.46e-04	-4.05e-03	-8.39e-06	1.84e-05	-1.58e-06
12	4	1.07e-04	3.40e-04	-4.05e-03	-8.35e-06	1.84e-05	-1.60e-06
12	5	5.53e-05	6.07e-05	-2.62e-03	-2.67e-06	1.14e-05	-1.28e-06
12	6	5.53e-05	5.49e-05	-2.62e-03	-2.63e-06	1.14e-05	-1.31e-06
12	7	8.34e-05	3.00e-04	-3.13e-03	-6.84e-06	1.42e-05	-1.12e-06
12	8	8.34e-05	2.94e-04	-3.13e-03	-6.80e-06	1.42e-05	-1.14e-06
12	9	7.85e-05	9.51e-05	-3.55e-03	-4.14e-06	1.56e-05	-1.79e-06
12	10	9.82e-05	2.74e-04	-3.90e-03	-7.14e-06	1.76e-05	-1.63e-06
12	11	9.82e-05	2.63e-04	-3.90e-03	-7.05e-06	1.76e-05	-1.68e-06
12	12	5.53e-05	4.91e-05	-2.62e-03	-2.59e-06	1.14e-05	-1.33e-06
12	13	7.50e-05	2.28e-04	-2.97e-03	-5.59e-06	1.34e-05	-1.17e-06
12	14	7.49e-05	2.17e-04	-2.98e-03	-5.50e-06	1.34e-05	-1.22e-06
12	15	1.96e-04	8.98e-04	-2.89e-03	-1.22e-05	1.70e-05	0.0
12	16	1.85e-04	-5.08e-03	-4.03e-03	5.56e-05	2.30e-05	-2.87e-05
12	17	-5.24e-05	5.39e-03	-1.61e-03	-6.42e-05	2.10e-06	2.63e-05
12	18	-6.29e-05	-5.85e-04	-2.75e-03	3.51e-06	8.04e-06	-2.91e-06
12	19	1.96e-04	2.03e-04	-3.01e-03	-4.49e-06	1.75e-05	-2.92e-06
12	20	1.86e-04	-4.38e-03	-3.91e-03	4.79e-05	2.25e-05	-2.53e-05
12	21	-5.25e-05	4.69e-03	-1.74e-03	-5.65e-05	2.59e-06	2.29e-05
12	22	-6.29e-05	1.10e-04	-2.63e-03	-4.18e-06	7.55e-06	0.0
12	23	2.03e-04	-1.50e-03	-3.31e-03	1.33e-05	1.92e-05	-1.30e-05
12	24	1.93e-04	-7.47e-03	-4.45e-03	8.10e-05	2.52e-05	-4.22e-05
12	25	-6.00e-05	7.78e-03	-1.19e-03	-8.97e-05	0.0	3.98e-05
12	26	-7.04e-05	1.81e-03	-2.33e-03	-2.20e-05	5.84e-06	1.06e-05
12	27	2.03e-04	-2.19e-03	-3.44e-03	2.10e-05	1.97e-05	-1.64e-05
12	28	1.93e-04	-6.77e-03	-4.33e-03	7.33e-05	2.47e-05	-3.88e-05
12	29	-6.00e-05	7.09e-03	-1.31e-03	-8.20e-05	0.0	3.64e-05
12	30	-7.04e-05	2.50e-03	-2.21e-03	-2.96e-05	5.35e-06	1.40e-05
12	31	1.21e-04	9.44e-03	-1.11e-03	-1.09e-04	4.87e-06	4.35e-05
12	32	8.63e-05	-0.01	-4.91e-03	1.16e-04	2.47e-05	-5.37e-05
12	33	4.67e-05	0.01	-7.29e-04	-1.25e-04	0.0	5.13e-05
12	34	1.18e-05	-9.12e-03	-4.53e-03	1.01e-04	2.02e-05	-4.60e-05
12	35	1.23e-04	8.72e-03	-1.24e-03	-1.02e-04	5.54e-06	3.95e-05
12	36	8.86e-05	-0.01	-5.04e-03	1.24e-04	2.54e-05	-5.77e-05
12	37	4.45e-05	0.01	-6.02e-04	-1.33e-04	0.0	5.53e-05
12	38	9.54e-06	-8.41e-03	-4.40e-03	9.31e-05	1.95e-05	-4.19e-05
12	39	1.21e-04	7.12e-03	-1.52e-03	-8.38e-05	6.52e-06	3.22e-05
12	40	8.65e-05	-8.16e-03	-4.50e-03	9.07e-05	2.30e-05	-4.24e-05
12	41	4.66e-05	8.47e-03	-1.14e-03	-9.94e-05	2.04e-06	3.99e-05
12	42	1.19e-05	-6.81e-03	-4.12e-03	7.51e-05	1.86e-05	-3.46e-05
12	43	1.23e-04	6.40e-03	-1.65e-03	-7.62e-05	7.18e-06	2.81e-05
12	44	8.87e-05	-8.87e-03	-4.63e-03	9.84e-05	2.37e-05	-4.64e-05
12	45	4.43e-05	9.19e-03	-1.01e-03	-1.07e-04	1.37e-06	4.40e-05

12	46	9.69e-06	-6.09e-03	-3.99e-03	6.75e-05	1.79e-05	-3.06e-05
12	47	-1.22e-04	5.80e-03	-1.44e-03	-6.80e-05	0.0	3.07e-05
12	48	2.56e-04	-5.49e-03	-4.20e-03	5.93e-05	2.60e-05	-3.32e-05
12	49	5.66e-05	-0.01	-5.52e-03	1.55e-04	2.69e-05	-6.95e-05
12	50	7.64e-05	0.01	-1.23e-04	-1.64e-04	-1.84e-06	6.70e-05
13	1	0.05	0.03	-0.01	1.14e-05	1.80e-04	-5.39e-05
13	2	0.05	0.03	-0.01	1.08e-05	1.80e-04	-5.41e-05
13	3	0.06	0.03	-0.01	-1.37e-05	2.11e-04	-7.49e-05
13	4	0.06	0.03	-0.01	-1.43e-05	2.11e-04	-7.51e-05
13	5	0.03	0.02	-8.95e-03	5.86e-06	1.22e-04	-3.70e-05
13	6	0.03	0.02	-8.93e-03	5.32e-06	1.22e-04	-3.71e-05
13	7	0.05	0.03	-0.01	-1.93e-05	1.53e-04	-5.80e-05
13	8	0.05	0.03	-0.01	-1.98e-05	1.53e-04	-5.81e-05
13	9	0.05	0.03	-0.01	1.03e-05	1.80e-04	-5.43e-05
13	10	0.06	0.03	-0.01	-6.21e-06	2.01e-04	-6.86e-05
13	11	0.06	0.03	-0.01	-7.29e-06	2.01e-04	-6.90e-05
13	12	0.03	0.02	-8.92e-03	4.78e-06	1.22e-04	-3.73e-05
13	13	0.04	0.02	-0.01	-1.17e-05	1.44e-04	-5.17e-05
13	14	0.04	0.02	-0.01	-1.28e-05	1.44e-04	-5.20e-05
13	15	0.28	0.08	-0.02	-2.92e-05	6.53e-04	-2.64e-04
13	16	0.29	4.46e-03	-0.02	7.76e-05	6.95e-04	-2.43e-04
13	17	-0.22	0.04	4.06e-03	-8.60e-05	-4.26e-04	1.52e-04
13	18	-0.20	-0.04	1.42e-03	2.09e-05	-3.84e-04	1.73e-04
13	19	0.27	0.10	-0.02	-4.78e-05	6.47e-04	-2.41e-04
13	20	0.30	-9.87e-03	-0.02	9.61e-05	7.01e-04	-2.66e-04
13	21	-0.22	0.05	5.01e-03	-1.04e-04	-4.32e-04	1.75e-04
13	22	-0.19	-0.05	4.72e-04	3.94e-05	-3.79e-04	1.50e-04
13	23	0.26	0.12	-0.02	-1.34e-04	6.28e-04	-3.15e-04
13	24	0.28	0.04	-0.02	-2.68e-05	6.70e-04	-2.93e-04
13	25	-0.20	4.60e-03	2.89e-03	1.84e-05	-4.01e-04	2.03e-04
13	26	-0.18	-0.08	2.39e-04	1.25e-04	-3.59e-04	2.24e-04
13	27	0.26	0.13	-0.02	-1.52e-04	6.22e-04	-2.92e-04
13	28	0.28	0.03	-0.02	-8.24e-06	6.76e-04	-3.17e-04
13	29	-0.21	0.02	3.83e-03	0.0	-4.07e-04	2.26e-04
13	30	-0.18	-0.09	-7.04e-04	1.44e-04	-3.53e-04	2.01e-04
13	31	0.08	0.16	-8.91e-03	-1.74e-04	2.26e-04	-1.43e-04
13	32	0.15	-0.10	-0.02	1.82e-04	3.67e-04	-7.23e-05
13	33	-0.07	0.15	-1.50e-03	-1.91e-04	-9.79e-05	-1.84e-05
13	34	-2.74e-03	-0.12	-0.01	1.65e-04	4.30e-05	5.26e-05
13	35	0.08	0.17	-8.56e-03	-2.05e-04	2.18e-04	-1.58e-04
13	36	0.14	-0.09	-0.02	1.51e-04	3.59e-04	-8.75e-05
13	37	-0.06	0.14	-1.85e-03	-1.59e-04	-9.03e-05	-3.21e-06
13	38	1.81e-03	-0.13	-0.01	1.97e-04	5.05e-05	6.77e-05
13	39	0.07	0.21	-5.77e-03	-2.35e-04	2.08e-04	-6.58e-05
13	40	0.16	-0.15	-0.02	2.44e-04	3.85e-04	-1.50e-04
13	41	-0.08	0.20	1.65e-03	-2.52e-04	-1.16e-04	5.91e-05
13	42	7.56e-03	-0.17	-0.01	2.27e-04	6.13e-05	-2.49e-05
13	43	0.07	0.22	-5.41e-03	-2.67e-04	2.00e-04	-8.10e-05
13	44	0.15	-0.14	-0.02	2.13e-04	3.78e-04	-1.65e-04
13	45	-0.07	0.19	1.29e-03	-2.21e-04	-1.09e-04	7.42e-05
13	46	0.01	-0.18	-0.01	2.58e-04	6.88e-05	-9.71e-06
13	47	-0.31	-0.04	7.10e-03	7.90e-05	-6.37e-04	2.60e-04
13	48	0.39	0.09	-0.03	-8.73e-05	9.06e-04	-3.51e-04
13	49	0.06	-0.23	-0.02	3.24e-04	1.85e-04	-8.23e-05
13	50	0.01	0.27	-6.73e-04	-3.32e-04	8.43e-05	-8.44e-06
14	1	0.0	0.0	0.0	0.0	0.0	0.0
14	2	0.0	0.0	0.0	0.0	0.0	0.0
14	3	0.0	0.0	0.0	0.0	0.0	0.0
14	4	0.0	0.0	0.0	0.0	0.0	0.0
14	5	0.0	0.0	0.0	0.0	0.0	0.0
14	6	0.0	0.0	0.0	0.0	0.0	0.0
14	7	0.0	0.0	0.0	0.0	0.0	0.0
14	8	0.0	0.0	0.0	0.0	0.0	0.0
14	9	0.0	0.0	0.0	0.0	0.0	0.0
14	10	0.0	0.0	0.0	0.0	0.0	0.0
14	11	0.0	0.0	0.0	0.0	0.0	0.0
14	12	0.0	0.0	0.0	0.0	0.0	0.0
14	13	0.0	0.0	0.0	0.0	0.0	0.0
14	14	0.0	0.0	0.0	0.0	0.0	0.0
14	15	0.0	0.0	0.0	0.0	0.0	0.0
14	16	0.0	0.0	0.0	0.0	0.0	0.0
14	17	0.0	0.0	0.0	0.0	0.0	0.0
14	18	0.0	0.0	0.0	0.0	0.0	0.0
14	19	0.0	0.0	0.0	0.0	0.0	0.0
14	20	0.0	0.0	0.0	0.0	0.0	0.0
14	21	0.0	0.0	0.0	0.0	0.0	0.0
14	22	0.0	0.0	0.0	0.0	0.0	0.0

14	23	0.0	0.0	0.0	0.0	0.0	0.0
14	24	0.0	0.0	0.0	0.0	0.0	0.0
14	25	0.0	0.0	0.0	0.0	0.0	0.0
14	26	0.0	0.0	0.0	0.0	0.0	0.0
14	27	0.0	0.0	0.0	0.0	0.0	0.0
14	28	0.0	0.0	0.0	0.0	0.0	0.0
14	29	0.0	0.0	0.0	0.0	0.0	0.0
14	30	0.0	0.0	0.0	0.0	0.0	0.0
14	31	0.0	0.0	0.0	0.0	0.0	0.0
14	32	0.0	0.0	0.0	0.0	0.0	0.0
14	33	0.0	0.0	0.0	0.0	0.0	0.0
14	34	0.0	0.0	0.0	0.0	0.0	0.0
14	35	0.0	0.0	0.0	0.0	0.0	0.0
14	36	0.0	0.0	0.0	0.0	0.0	0.0
14	37	0.0	0.0	0.0	0.0	0.0	0.0
14	38	0.0	0.0	0.0	0.0	0.0	0.0
14	39	0.0	0.0	0.0	0.0	0.0	0.0
14	40	0.0	0.0	0.0	0.0	0.0	0.0
14	41	0.0	0.0	0.0	0.0	0.0	0.0
14	42	0.0	0.0	0.0	0.0	0.0	0.0
14	43	0.0	0.0	0.0	0.0	0.0	0.0
14	44	0.0	0.0	0.0	0.0	0.0	0.0
14	45	0.0	0.0	0.0	0.0	0.0	0.0
14	46	0.0	0.0	0.0	0.0	0.0	0.0
14	47	0.0	0.0	0.0	0.0	0.0	0.0
14	48	0.0	0.0	0.0	0.0	0.0	0.0
14	49	0.0	0.0	0.0	0.0	0.0	0.0
14	50	0.0	0.0	0.0	0.0	0.0	0.0
15	1	0.02	0.03	-0.05	-2.92e-04	9.22e-05	-9.66e-05
15	2	0.02	0.03	-0.05	-2.95e-04	9.61e-05	-9.62e-05
15	3	0.02	0.04	-0.05	-3.06e-04	9.96e-05	-1.20e-04
15	4	0.02	0.04	-0.05	-3.08e-04	1.03e-04	-1.19e-04
15	5	0.01	0.03	-0.03	-2.04e-04	6.65e-05	-6.61e-05
15	6	0.01	0.03	-0.04	-2.07e-04	7.04e-05	-6.57e-05
15	7	0.02	0.03	-0.04	-2.17e-04	7.39e-05	-8.93e-05
15	8	0.02	0.03	-0.04	-2.20e-04	7.78e-05	-8.88e-05
15	9	0.02	0.04	-0.05	-2.98e-04	1.00e-04	-9.58e-05
15	10	0.02	0.04	-0.05	-3.02e-04	9.74e-05	-1.13e-04
15	11	0.02	0.04	-0.05	-3.07e-04	1.05e-04	-1.12e-04
15	12	0.01	0.03	-0.04	-2.09e-04	7.43e-05	-6.53e-05
15	13	0.02	0.03	-0.04	-2.13e-04	7.17e-05	-8.23e-05
15	14	0.02	0.03	-0.04	-2.19e-04	7.94e-05	-8.15e-05
15	15	0.17	0.08	-0.04	-2.74e-04	1.57e-04	-1.51e-04
15	16	0.14	-7.85e-03	-0.04	-1.74e-04	1.81e-04	-1.69e-04
15	17	-0.10	0.06	-0.03	-2.45e-04	-4.25e-05	1.80e-05
15	18	-0.14	-0.03	-0.03	-1.44e-04	-1.83e-05	0.0
15	19	0.14	0.09	-0.04	-2.79e-04	1.58e-04	-1.50e-04
15	20	0.17	-0.01	-0.04	-1.69e-04	1.81e-04	-1.69e-04
15	21	-0.13	0.07	-0.03	-2.50e-04	-4.19e-05	1.84e-05
15	22	-0.11	-0.03	-0.03	-1.40e-04	-1.88e-05	0.0
15	23	0.12	0.09	-0.04	-2.83e-04	1.23e-04	-1.45e-04
15	24	0.09	1.37e-03	-0.04	-1.82e-04	1.47e-04	-1.64e-04
15	25	-0.06	0.06	-0.04	-2.37e-04	-8.23e-06	1.29e-05
15	26	-0.09	-0.03	-0.03	-1.36e-04	1.60e-05	-5.31e-06
15	27	0.09	0.10	-0.04	-2.87e-04	1.23e-04	-1.45e-04
15	28	0.12	-4.03e-03	-0.04	-1.77e-04	1.47e-04	-1.64e-04
15	29	-0.09	0.06	-0.04	-2.42e-04	-7.66e-06	1.33e-05
15	30	-0.06	-0.04	-0.03	-1.31e-04	1.54e-05	-5.69e-06
15	31	0.12	0.18	-0.04	-3.82e-04	5.90e-05	-7.03e-05
15	32	-1.05e-03	-0.12	-0.03	-4.60e-05	1.40e-04	-1.31e-04
15	33	0.03	0.18	-0.04	-3.73e-04	0.0	-1.98e-05
15	34	-0.08	-0.12	-0.03	-3.71e-05	7.99e-05	-8.04e-05
15	35	0.10	0.18	-0.04	-3.84e-04	4.87e-05	-6.88e-05
15	36	-0.01	-0.12	-0.03	-4.85e-05	1.30e-04	-1.29e-04
15	37	0.05	0.17	-0.04	-3.70e-04	9.39e-06	-2.13e-05
15	38	-0.07	-0.13	-0.03	-3.47e-05	9.02e-05	-8.19e-05
15	39	0.01	0.20	-0.04	-3.97e-04	6.09e-05	-6.91e-05
15	40	0.10	-0.14	-0.03	-3.04e-05	1.38e-04	-1.32e-04
15	41	-0.07	0.19	-0.04	-3.88e-04	1.01e-06	-1.85e-05
15	42	0.02	-0.14	-0.03	-2.15e-05	7.80e-05	-8.17e-05
15	43	8.76e-04	0.20	-0.04	-4.00e-04	5.06e-05	-6.75e-05
15	44	0.09	-0.13	-0.03	-3.28e-05	1.28e-04	-1.31e-04
15	45	-0.05	0.19	-0.04	-3.86e-04	1.13e-05	-2.00e-05
15	46	0.03	-0.14	-0.03	-1.91e-05	8.83e-05	-8.32e-05
15	47	-0.14	6.86e-03	-0.03	-1.79e-04	-4.71e-05	5.11e-05
15	48	0.18	0.05	-0.04	-2.40e-04	1.86e-04	-2.02e-04
15	49	-1.35e-03	-0.22	-0.03	7.02e-05	8.24e-05	-1.22e-04

15	50	0.03	0.28	-0.04	-4.89e-04	5.65e-05	-2.86e-05
16	1	0.02	0.04	-0.04	-2.74e-04	4.15e-05	-1.00e-04
16	2	0.02	0.04	-0.05	-2.77e-04	4.40e-05	-9.99e-05
16	3	0.02	0.04	-0.05	-2.85e-04	4.17e-05	-1.25e-04
16	4	0.02	0.04	-0.05	-2.88e-04	4.42e-05	-1.25e-04
16	5	0.01	0.03	-0.03	-1.92e-04	2.96e-05	-6.95e-05
16	6	0.01	0.03	-0.03	-1.95e-04	3.21e-05	-6.90e-05
16	7	0.02	0.03	-0.04	-2.03e-04	2.99e-05	-9.42e-05
16	8	0.02	0.03	-0.04	-2.06e-04	3.24e-05	-9.37e-05
16	9	0.02	0.04	-0.05	-2.79e-04	4.65e-05	-9.94e-05
16	10	0.02	0.04	-0.05	-2.82e-04	4.16e-05	-1.18e-04
16	11	0.02	0.04	-0.05	-2.87e-04	4.67e-05	-1.17e-04
16	12	0.01	0.03	-0.03	-1.98e-04	3.46e-05	-6.86e-05
16	13	0.02	0.03	-0.04	-2.00e-04	2.98e-05	-8.68e-05
16	14	0.02	0.03	-0.04	-2.05e-04	3.48e-05	-8.59e-05
16	15	0.17	0.07	-0.04	-2.44e-04	1.34e-04	-1.60e-04
16	16	0.13	-0.03	-0.03	-1.34e-04	1.03e-04	-1.87e-04
16	17	-0.11	0.09	-0.03	-2.59e-04	-4.35e-05	2.87e-05
16	18	-0.14	-0.01	-0.03	-1.49e-04	-7.48e-05	1.37e-06
16	19	0.14	0.07	-0.04	-2.40e-04	1.25e-04	-1.61e-04
16	20	0.16	-0.03	-0.03	-1.38e-04	1.12e-04	-1.87e-04
16	21	-0.14	0.09	-0.03	-2.55e-04	-5.29e-05	2.80e-05
16	22	-0.11	-8.15e-03	-0.03	-1.53e-04	-6.55e-05	2.09e-06
16	23	0.12	0.05	-0.04	-2.27e-04	1.03e-04	-1.56e-04
16	24	0.09	-0.05	-0.03	-1.17e-04	7.21e-05	-1.83e-04
16	25	-0.06	0.10	-0.03	-2.76e-04	-1.27e-05	2.44e-05
16	26	-0.09	3.36e-03	-0.03	-1.66e-04	-4.39e-05	-2.93e-06
16	27	0.09	0.05	-0.04	-2.23e-04	9.41e-05	-1.57e-04
16	28	0.12	-0.04	-0.03	-1.21e-04	8.14e-05	-1.82e-04
16	29	-0.09	0.10	-0.03	-2.72e-04	-2.20e-05	2.37e-05
16	30	-0.06	6.78e-03	-0.03	-1.70e-04	-3.46e-05	-2.21e-06
16	31	0.11	0.19	-0.04	-3.77e-04	1.08e-04	-6.21e-05
16	32	-2.94e-03	-0.14	-0.03	-1.14e-05	4.32e-06	-1.53e-04
16	33	0.03	0.20	-0.04	-3.82e-04	5.51e-05	-5.48e-06
16	34	-0.09	-0.13	-0.03	-1.58e-05	-4.90e-05	-9.66e-05
16	35	0.10	0.19	-0.04	-3.72e-04	9.92e-05	-6.08e-05
16	36	-0.02	-0.14	-0.03	-6.19e-06	-4.94e-06	-1.52e-04
16	37	0.04	0.20	-0.04	-3.87e-04	6.44e-05	-6.77e-06
16	38	-0.07	-0.13	-0.03	-2.10e-05	-3.98e-05	-9.79e-05
16	39	0.01	0.18	-0.04	-3.64e-04	7.74e-05	-6.45e-05
16	40	0.10	-0.13	-0.03	-2.48e-05	3.54e-05	-1.51e-04
16	41	-0.07	0.19	-0.04	-3.68e-04	2.41e-05	-7.86e-06
16	42	0.02	-0.12	-0.03	-2.91e-05	-1.80e-05	-9.42e-05
16	43	-1.53e-03	0.18	-0.04	-3.59e-04	6.82e-05	-6.32e-05
16	44	0.08	-0.13	-0.03	-1.95e-05	2.61e-05	-1.50e-04
16	45	-0.06	0.19	-0.04	-3.74e-04	3.33e-05	-9.15e-06
16	46	0.03	-0.12	-0.03	-3.43e-05	-8.70e-06	-9.55e-05
16	47	-0.15	0.06	-0.03	-2.22e-04	-7.31e-05	6.37e-05
16	48	0.17	1.61e-03	-0.04	-1.71e-04	1.33e-04	-2.22e-04
16	49	0.03	-0.23	-0.03	8.51e-05	0.0	-1.48e-04
16	50	-3.19e-03	0.29	-0.04	-4.78e-04	6.00e-05	-1.07e-05
17	1	0.0	0.0	0.0	0.0	0.0	0.0
17	2	0.0	0.0	0.0	0.0	0.0	0.0
17	3	0.0	0.0	0.0	0.0	0.0	0.0
17	4	0.0	0.0	0.0	0.0	0.0	0.0
17	5	0.0	0.0	0.0	0.0	0.0	0.0
17	6	0.0	0.0	0.0	0.0	0.0	0.0
17	7	0.0	0.0	0.0	0.0	0.0	0.0
17	8	0.0	0.0	0.0	0.0	0.0	0.0
17	9	0.0	0.0	0.0	0.0	0.0	0.0
17	10	0.0	0.0	0.0	0.0	0.0	0.0
17	11	0.0	0.0	0.0	0.0	0.0	0.0
17	12	0.0	0.0	0.0	0.0	0.0	0.0
17	13	0.0	0.0	0.0	0.0	0.0	0.0
17	14	0.0	0.0	0.0	0.0	0.0	0.0
17	15	0.0	0.0	0.0	0.0	0.0	0.0
17	16	0.0	0.0	0.0	0.0	0.0	0.0
17	17	0.0	0.0	0.0	0.0	0.0	0.0
17	18	0.0	0.0	0.0	0.0	0.0	0.0
17	19	0.0	0.0	0.0	0.0	0.0	0.0
17	20	0.0	0.0	0.0	0.0	0.0	0.0
17	21	0.0	0.0	0.0	0.0	0.0	0.0
17	22	0.0	0.0	0.0	0.0	0.0	0.0
17	23	0.0	0.0	0.0	0.0	0.0	0.0
17	24	0.0	0.0	0.0	0.0	0.0	0.0
17	25	0.0	0.0	0.0	0.0	0.0	0.0
17	26	0.0	0.0	0.0	0.0	0.0	0.0

17	27	0.0	0.0	0.0	0.0	0.0	0.0
17	28	0.0	0.0	0.0	0.0	0.0	0.0
17	29	0.0	0.0	0.0	0.0	0.0	0.0
17	30	0.0	0.0	0.0	0.0	0.0	0.0
17	31	0.0	0.0	0.0	0.0	0.0	0.0
17	32	0.0	0.0	0.0	0.0	0.0	0.0
17	33	0.0	0.0	0.0	0.0	0.0	0.0
17	34	0.0	0.0	0.0	0.0	0.0	0.0
17	35	0.0	0.0	0.0	0.0	0.0	0.0
17	36	0.0	0.0	0.0	0.0	0.0	0.0
17	37	0.0	0.0	0.0	0.0	0.0	0.0
17	38	0.0	0.0	0.0	0.0	0.0	0.0
17	39	0.0	0.0	0.0	0.0	0.0	0.0
17	40	0.0	0.0	0.0	0.0	0.0	0.0
17	41	0.0	0.0	0.0	0.0	0.0	0.0
17	42	0.0	0.0	0.0	0.0	0.0	0.0
17	43	0.0	0.0	0.0	0.0	0.0	0.0
17	44	0.0	0.0	0.0	0.0	0.0	0.0
17	45	0.0	0.0	0.0	0.0	0.0	0.0
17	46	0.0	0.0	0.0	0.0	0.0	0.0
17	47	0.0	0.0	0.0	0.0	0.0	0.0
17	48	0.0	0.0	0.0	0.0	0.0	0.0
17	49	0.0	0.0	0.0	0.0	0.0	0.0
17	50	0.0	0.0	0.0	0.0	0.0	0.0
18	1	0.0	0.0	0.0	0.0	0.0	0.0
18	2	0.0	0.0	0.0	0.0	0.0	0.0
18	3	0.0	0.0	0.0	0.0	0.0	0.0
18	4	0.0	0.0	0.0	0.0	0.0	0.0
18	5	0.0	0.0	0.0	0.0	0.0	0.0
18	6	0.0	0.0	0.0	0.0	0.0	0.0
18	7	0.0	0.0	0.0	0.0	0.0	0.0
18	8	0.0	0.0	0.0	0.0	0.0	0.0
18	9	0.0	0.0	0.0	0.0	0.0	0.0
18	10	0.0	0.0	0.0	0.0	0.0	0.0
18	11	0.0	0.0	0.0	0.0	0.0	0.0
18	12	0.0	0.0	0.0	0.0	0.0	0.0
18	13	0.0	0.0	0.0	0.0	0.0	0.0
18	14	0.0	0.0	0.0	0.0	0.0	0.0
18	15	0.0	0.0	0.0	0.0	0.0	0.0
18	16	0.0	0.0	0.0	0.0	0.0	0.0
18	17	0.0	0.0	0.0	0.0	0.0	0.0
18	18	0.0	0.0	0.0	0.0	0.0	0.0
18	19	0.0	0.0	0.0	0.0	0.0	0.0
18	20	0.0	0.0	0.0	0.0	0.0	0.0
18	21	0.0	0.0	0.0	0.0	0.0	0.0
18	22	0.0	0.0	0.0	0.0	0.0	0.0
18	23	0.0	0.0	0.0	0.0	0.0	0.0
18	24	0.0	0.0	0.0	0.0	0.0	0.0
18	25	0.0	0.0	0.0	0.0	0.0	0.0
18	26	0.0	0.0	0.0	0.0	0.0	0.0
18	27	0.0	0.0	0.0	0.0	0.0	0.0
18	28	0.0	0.0	0.0	0.0	0.0	0.0
18	29	0.0	0.0	0.0	0.0	0.0	0.0
18	30	0.0	0.0	0.0	0.0	0.0	0.0
18	31	0.0	0.0	0.0	0.0	0.0	0.0
18	32	0.0	0.0	0.0	0.0	0.0	0.0
18	33	0.0	0.0	0.0	0.0	0.0	0.0
18	34	0.0	0.0	0.0	0.0	0.0	0.0
18	35	0.0	0.0	0.0	0.0	0.0	0.0
18	36	0.0	0.0	0.0	0.0	0.0	0.0
18	37	0.0	0.0	0.0	0.0	0.0	0.0
18	38	0.0	0.0	0.0	0.0	0.0	0.0
18	39	0.0	0.0	0.0	0.0	0.0	0.0
18	40	0.0	0.0	0.0	0.0	0.0	0.0
18	41	0.0	0.0	0.0	0.0	0.0	0.0
18	42	0.0	0.0	0.0	0.0	0.0	0.0
18	43	0.0	0.0	0.0	0.0	0.0	0.0
18	44	0.0	0.0	0.0	0.0	0.0	0.0
18	45	0.0	0.0	0.0	0.0	0.0	0.0
18	46	0.0	0.0	0.0	0.0	0.0	0.0
18	47	0.0	0.0	0.0	0.0	0.0	0.0
18	48	0.0	0.0	0.0	0.0	0.0	0.0
18	49	0.0	0.0	0.0	0.0	0.0	0.0
18	50	0.0	0.0	0.0	0.0	0.0	0.0
19	1	6.37e-03	9.60e-03	-0.03	4.57e-05	1.58e-04	4.70e-06
19	2	6.41e-03	9.62e-03	-0.03	4.57e-05	1.58e-04	4.33e-06
19	3	8.63e-03	0.01	-0.03	6.80e-05	2.06e-04	1.55e-05

19	4	8.66e-03	0.01	-0.03	6.80e-05	2.07e-04	1.52e-05
19	5	4.60e-03	7.08e-03	-0.02	3.33e-05	1.16e-04	2.98e-06
19	6	4.64e-03	7.11e-03	-0.02	3.33e-05	1.17e-04	2.61e-06
19	7	6.86e-03	9.34e-03	-0.02	5.56e-05	1.64e-04	1.38e-05
19	8	6.89e-03	9.36e-03	-0.02	5.56e-05	1.65e-04	1.35e-05
19	9	6.44e-03	9.65e-03	-0.03	4.57e-05	1.59e-04	3.96e-06
19	10	7.95e-03	0.01	-0.03	6.13e-05	1.92e-04	1.23e-05
19	11	8.02e-03	0.01	-0.03	6.13e-05	1.92e-04	1.16e-05
19	12	4.67e-03	7.13e-03	-0.02	3.33e-05	1.17e-04	2.24e-06
19	13	6.18e-03	8.66e-03	-0.02	4.89e-05	1.50e-04	1.06e-05
19	14	6.25e-03	8.71e-03	-0.02	4.89e-05	1.50e-04	9.83e-06
19	15	0.08	0.04	-0.03	2.59e-05	4.16e-04	4.04e-05
19	16	0.09	6.38e-05	-0.03	9.04e-05	3.76e-04	1.98e-05
19	17	-0.08	0.02	-0.02	-5.86e-06	-1.04e-04	-5.16e-06
19	18	-0.07	-0.03	-0.01	5.86e-05	-1.44e-04	-2.57e-05
19	19	0.08	0.05	-0.03	1.33e-05	3.80e-04	3.30e-05
19	20	0.09	-7.76e-03	-0.03	1.03e-04	4.11e-04	2.72e-05
19	21	-0.08	0.02	-0.02	-1.85e-05	-1.40e-04	-1.25e-05
19	22	-0.07	-0.04	-0.01	7.12e-05	-1.09e-04	-1.84e-05
19	23	0.06	0.06	-0.03	-3.58e-05	3.49e-04	3.99e-05
19	24	0.07	0.02	-0.03	2.87e-05	3.09e-04	1.93e-05
19	25	-0.06	-3.04e-03	-0.02	5.58e-05	-3.78e-05	-4.70e-06
19	26	-0.05	-0.05	-0.02	1.20e-04	-7.79e-05	-2.53e-05
19	27	0.06	0.07	-0.03	-4.84e-05	3.14e-04	3.25e-05
19	28	0.07	0.01	-0.03	4.13e-05	3.45e-04	2.67e-05
19	29	-0.06	4.79e-03	-0.02	4.32e-05	-7.33e-05	-1.21e-05
19	30	-0.05	-0.06	-0.02	1.33e-04	-4.24e-05	-1.79e-05
19	31	0.01	0.09	-0.03	-6.04e-05	2.80e-04	4.84e-05
19	32	0.05	-0.06	-0.02	1.54e-04	1.47e-04	-2.01e-05
19	33	-0.04	0.08	-0.02	-7.00e-05	1.24e-04	3.48e-05
19	34	9.48e-04	-0.07	-0.02	1.45e-04	-9.12e-06	-3.38e-05
19	35	3.57e-03	0.09	-0.03	-7.90e-05	2.60e-04	4.83e-05
19	36	0.04	-0.06	-0.02	1.36e-04	1.27e-04	-2.03e-05
19	37	-0.03	0.07	-0.02	-5.15e-05	1.44e-04	3.49e-05
19	38	7.44e-03	-0.08	-0.02	1.63e-04	1.08e-05	-3.36e-05
19	39	0.01	0.11	-0.03	-1.03e-04	1.62e-04	2.39e-05
19	40	0.05	-0.09	-0.02	1.97e-04	2.65e-04	4.41e-06
19	41	-0.04	0.10	-0.02	-1.12e-04	6.18e-06	1.02e-05
19	42	-2.61e-03	-0.10	-0.02	1.87e-04	1.09e-04	-9.25e-06
19	43	7.12e-03	0.12	-0.02	-1.21e-04	1.42e-04	2.37e-05
19	44	0.04	-0.08	-0.02	1.78e-04	2.45e-04	4.27e-06
19	45	-0.03	0.10	-0.02	-9.35e-05	2.61e-05	1.04e-05
19	46	3.89e-03	-0.10	-0.02	2.06e-04	1.29e-04	-9.11e-06
19	47	-0.10	-0.03	-0.01	9.20e-05	-2.01e-04	-1.88e-05
19	48	0.11	0.05	-0.03	-7.52e-06	4.73e-04	3.35e-05
19	49	0.01	-0.13	-0.02	2.43e-04	1.55e-04	-1.92e-05
19	50	-6.18e-04	0.14	-0.02	-1.59e-04	1.17e-04	3.38e-05
20	1	5.31e-03	9.67e-03	-0.01	-9.20e-05	5.40e-05	-2.95e-05
20	2	5.27e-03	9.70e-03	-0.01	-9.21e-05	5.42e-05	-2.96e-05
20	3	7.58e-03	0.01	-0.02	-1.16e-04	6.55e-05	-4.12e-05
20	4	7.53e-03	0.01	-0.02	-1.16e-04	6.57e-05	-4.13e-05
20	5	3.81e-03	7.14e-03	-0.01	-6.77e-05	4.00e-05	-2.11e-05
20	6	3.77e-03	7.16e-03	-0.01	-6.78e-05	4.02e-05	-2.11e-05
20	7	6.07e-03	9.62e-03	-0.01	-9.15e-05	5.15e-05	-3.28e-05
20	8	6.03e-03	9.64e-03	-0.01	-9.17e-05	5.17e-05	-3.28e-05
20	9	5.23e-03	9.72e-03	-0.01	-9.22e-05	5.45e-05	-2.97e-05
20	10	6.90e-03	0.01	-0.02	-1.09e-04	6.20e-05	-3.77e-05
20	11	6.81e-03	0.01	-0.02	-1.09e-04	6.25e-05	-3.79e-05
20	12	3.73e-03	7.18e-03	-0.01	-6.79e-05	4.05e-05	-2.12e-05
20	13	5.40e-03	8.87e-03	-0.01	-8.44e-05	4.80e-05	-2.93e-05
20	14	5.31e-03	8.92e-03	-0.01	-8.46e-05	4.85e-05	-2.94e-05
20	15	0.09	0.04	-0.03	-2.08e-04	3.42e-04	-9.25e-05
20	16	0.07	-1.73e-04	-0.02	-5.46e-05	2.72e-04	-1.45e-04
20	17	-0.06	0.02	-2.39e-03	-9.99e-05	-1.82e-04	9.32e-05
20	18	-0.08	-0.03	7.10e-03	5.39e-05	-2.53e-04	4.10e-05
20	19	0.07	0.05	-0.03	-2.34e-04	2.85e-04	-7.28e-05
20	20	0.09	-8.02e-03	-0.02	-2.89e-05	3.29e-04	-1.64e-04
20	21	-0.08	0.02	-1.77e-03	-1.26e-04	-2.40e-04	1.13e-04
20	22	-0.06	-0.04	6.48e-03	7.96e-05	-1.96e-04	2.13e-05
20	23	0.06	0.06	-0.03	-2.72e-04	2.53e-04	-6.77e-05
20	24	0.04	0.02	-0.02	-1.18e-04	1.83e-04	-1.20e-04
20	25	-0.03	-2.64e-03	-5.38e-03	-3.60e-05	-9.38e-05	6.84e-05
20	26	-0.05	-0.05	4.12e-03	1.18e-04	-1.64e-04	1.62e-05
20	27	0.05	0.07	-0.03	-2.98e-04	1.96e-04	-4.80e-05
20	28	0.06	0.01	-0.02	-9.28e-05	2.40e-04	-1.40e-04
20	29	-0.05	5.20e-03	-4.75e-03	-6.17e-05	-1.51e-04	8.82e-05
20	30	-0.04	-0.05	3.49e-03	1.43e-04	-1.07e-04	-3.51e-06

20	31	0.06	0.09	-0.03	-3.50e-04	2.41e-04	3.35e-05
20	32	-4.88e-03	-0.06	-3.19e-04	1.63e-04	5.94e-06	-1.41e-04
20	33	0.01	0.08	-0.02	-3.17e-04	8.32e-05	8.92e-05
20	34	-0.05	-0.07	8.22e-03	1.95e-04	-1.51e-04	-8.49e-05
20	35	0.05	0.09	-0.03	-3.69e-04	2.14e-04	4.09e-05
20	36	-0.01	-0.05	5.76e-04	1.44e-04	-2.07e-05	-1.33e-04
20	37	0.02	0.07	-0.02	-2.98e-04	1.10e-04	8.17e-05
20	38	-0.04	-0.07	7.32e-03	2.14e-04	-1.25e-04	-9.24e-05
20	39	3.37e-03	0.11	-0.03	-4.35e-04	4.97e-05	9.92e-05
20	40	0.05	-0.09	-2.40e-03	2.48e-04	1.97e-04	-2.06e-04
20	41	-0.04	0.10	-0.02	-4.03e-04	-1.08e-04	1.55e-04
20	42	6.06e-03	-0.09	6.13e-03	2.81e-04	3.95e-05	-1.51e-04
20	43	-4.09e-03	0.12	-0.03	-4.54e-04	2.31e-05	1.07e-04
20	44	0.04	-0.08	-1.51e-03	2.29e-04	1.70e-04	-1.99e-04
20	45	-0.03	0.10	-0.02	-3.84e-04	-8.11e-05	1.47e-04
20	46	0.01	-0.10	5.24e-03	3.00e-04	6.61e-05	-1.58e-04
20	47	-0.08	-0.03	7.29e-03	6.54e-05	-2.62e-04	7.69e-05
20	48	0.09	0.05	-0.03	-2.20e-04	3.51e-04	-1.28e-04
20	49	0.01	-0.13	0.01	3.93e-04	2.52e-06	-2.02e-04
20	50	-4.70e-03	0.14	-0.04	-5.47e-04	8.67e-05	1.50e-04
21	1	0.04	0.04	-0.03	-5.29e-04	1.51e-04	-2.09e-04
21	2	0.04	0.04	-0.03	-5.29e-04	1.51e-04	-2.09e-04
21	3	0.04	0.05	-0.03	-5.31e-04	1.51e-04	-2.09e-04
21	4	0.04	0.05	-0.03	-5.31e-04	1.51e-04	-2.09e-04
21	5	0.03	0.03	-0.02	-3.77e-04	1.03e-04	-1.49e-04
21	6	0.03	0.03	-0.02	-3.77e-04	1.03e-04	-1.49e-04
21	7	0.03	0.04	-0.02	-3.79e-04	1.04e-04	-1.49e-04
21	8	0.03	0.04	-0.02	-3.79e-04	1.04e-04	-1.49e-04
21	9	0.04	0.04	-0.03	-5.29e-04	1.51e-04	-2.09e-04
21	10	0.04	0.05	-0.03	-5.30e-04	1.51e-04	-2.09e-04
21	11	0.04	0.05	-0.03	-5.30e-04	1.51e-04	-2.09e-04
21	12	0.03	0.03	-0.02	-3.77e-04	1.03e-04	-1.49e-04
21	13	0.03	0.04	-0.02	-3.79e-04	1.04e-04	-1.49e-04
21	14	0.03	0.04	-0.02	-3.79e-04	1.04e-04	-1.49e-04
21	15	0.34	0.11	-0.03	-3.95e-04	4.05e-04	-1.06e-04
21	16	0.30	-0.03	-0.03	-3.69e-04	3.60e-04	-1.42e-04
21	17	-0.24	0.10	-9.73e-03	-3.88e-04	-1.52e-04	-1.56e-04
21	18	-0.28	-0.04	-8.31e-03	-3.61e-04	-1.98e-04	-1.92e-04
21	19	0.30	0.12	-0.03	-3.96e-04	3.67e-04	-1.36e-04
21	20	0.33	-0.04	-0.03	-3.68e-04	3.98e-04	-1.13e-04
21	21	-0.27	0.11	-8.04e-03	-3.88e-04	-1.91e-04	-1.86e-04
21	22	-0.24	-0.05	-0.01	-3.60e-04	-1.59e-04	-1.62e-04
21	23	0.29	0.10	-0.03	-3.96e-04	3.68e-04	-2.10e-04
21	24	0.25	-0.04	-0.03	-3.70e-04	3.23e-04	-2.46e-04
21	25	-0.19	0.11	-0.01	-3.86e-04	-1.16e-04	-5.28e-05
21	26	-0.23	-0.03	-9.94e-03	-3.60e-04	-1.61e-04	-8.89e-05
21	27	0.25	0.11	-0.03	-3.97e-04	3.30e-04	-2.39e-04
21	28	0.28	-0.05	-0.03	-3.69e-04	3.61e-04	-2.16e-04
21	29	-0.22	0.12	-9.67e-03	-3.87e-04	-1.54e-04	-8.25e-05
21	30	-0.19	-0.04	-0.01	-3.59e-04	-1.23e-04	-5.93e-05
21	31	0.18	0.28	-0.03	-4.24e-04	2.63e-04	-8.17e-05
21	32	0.05	-0.21	-0.02	-3.35e-04	1.11e-04	-2.02e-04
21	33	9.89e-03	0.28	-0.02	-4.22e-04	9.57e-05	-9.66e-05
21	34	-0.12	-0.21	-0.01	-3.32e-04	-5.57e-05	-2.17e-04
21	35	0.17	0.28	-0.03	-4.24e-04	2.52e-04	-1.13e-04
21	36	0.03	-0.21	-0.02	-3.35e-04	1.01e-04	-2.33e-04
21	37	0.03	0.28	-0.02	-4.21e-04	1.07e-04	-6.57e-05
21	38	-0.11	-0.21	-0.02	-3.32e-04	-4.48e-05	-1.86e-04
21	39	0.07	0.29	-0.02	-4.26e-04	1.35e-04	-1.80e-04
21	40	0.17	-0.22	-0.03	-3.32e-04	2.39e-04	-1.03e-04
21	41	-0.11	0.29	-0.01	-4.24e-04	-3.20e-05	-1.95e-04
21	42	-6.68e-03	-0.22	-0.02	-3.30e-04	7.21e-05	-1.18e-04
21	43	0.05	0.29	-0.02	-4.26e-04	1.24e-04	-2.11e-04
21	44	0.15	-0.22	-0.03	-3.33e-04	2.28e-04	-1.34e-04
21	45	-0.09	0.29	-0.01	-4.23e-04	-2.11e-05	-1.64e-04
21	46	8.61e-03	-0.22	-0.02	-3.30e-04	8.30e-05	-8.70e-05
21	47	-0.37	0.03	-4.39e-03	-3.73e-04	-2.85e-04	-7.06e-05
21	48	0.43	0.04	-0.04	-3.83e-04	4.92e-04	-2.28e-04
21	49	0.05	-0.36	-0.02	-3.05e-04	7.49e-05	-1.69e-04
21	50	0.01	0.43	-0.02	-4.51e-04	1.32e-04	-1.29e-04
22	1	0.04	0.04	-0.03	-4.78e-04	1.72e-04	-2.08e-04
22	2	0.04	0.04	-0.03	-4.78e-04	1.72e-04	-2.08e-04
22	3	0.04	0.05	-0.03	-4.77e-04	1.73e-04	-2.08e-04
22	4	0.04	0.05	-0.03	-4.77e-04	1.73e-04	-2.08e-04
22	5	0.03	0.03	-0.02	-3.41e-04	1.19e-04	-1.48e-04
22	6	0.03	0.03	-0.02	-3.41e-04	1.19e-04	-1.48e-04
22	7	0.03	0.04	-0.02	-3.40e-04	1.20e-04	-1.49e-04

22	8	0.03	0.04	-0.02	-3.40e-04	1.19e-04	-1.49e-04
22	9	0.04	0.04	-0.03	-4.78e-04	1.72e-04	-2.08e-04
22	10	0.04	0.05	-0.03	-4.77e-04	1.73e-04	-2.08e-04
22	11	0.04	0.05	-0.03	-4.77e-04	1.73e-04	-2.08e-04
22	12	0.03	0.03	-0.02	-3.41e-04	1.19e-04	-1.48e-04
22	13	0.03	0.04	-0.02	-3.40e-04	1.19e-04	-1.49e-04
22	14	0.03	0.04	-0.02	-3.40e-04	1.19e-04	-1.49e-04
22	15	0.34	0.11	-0.03	-3.59e-04	4.11e-04	-1.03e-04
22	16	0.30	-0.05	-0.03	-3.15e-04	3.69e-04	-1.40e-04
22	17	-0.24	0.12	-0.02	-3.66e-04	-1.31e-04	-1.57e-04
22	18	-0.28	-0.04	-0.02	-3.22e-04	-1.73e-04	-1.94e-04
22	19	0.30	0.10	-0.03	-3.58e-04	3.72e-04	-1.33e-04
22	20	0.33	-0.04	-0.03	-3.16e-04	4.09e-04	-1.10e-04
22	21	-0.27	0.11	-0.02	-3.65e-04	-1.70e-04	-1.87e-04
22	22	-0.24	-0.03	-0.02	-3.23e-04	-1.34e-04	-1.64e-04
22	23	0.29	0.08	-0.03	-3.48e-04	3.81e-04	-2.03e-04
22	24	0.25	-0.08	-0.03	-3.04e-04	3.39e-04	-2.40e-04
22	25	-0.19	0.15	-0.02	-3.77e-04	-1.01e-04	-5.65e-05
22	26	-0.23	-0.01	-0.02	-3.33e-04	-1.43e-04	-9.37e-05
22	27	0.25	0.08	-0.03	-3.47e-04	3.42e-04	-2.33e-04
22	28	0.28	-0.07	-0.03	-3.05e-04	3.78e-04	-2.11e-04
22	29	-0.22	0.14	-0.02	-3.76e-04	-1.40e-04	-8.63e-05
22	30	-0.19	-5.69e-03	-0.02	-3.34e-04	-1.04e-04	-6.39e-05
22	31	0.18	0.29	-0.03	-4.13e-04	2.71e-04	-7.83e-05
22	32	0.05	-0.23	-0.02	-2.66e-04	1.30e-04	-2.02e-04
22	33	9.86e-03	0.30	-0.02	-4.15e-04	1.08e-04	-9.45e-05
22	34	-0.12	-0.22	-0.02	-2.68e-04	-3.26e-05	-2.19e-04
22	35	0.17	0.29	-0.03	-4.09e-04	2.62e-04	-1.08e-04
22	36	0.03	-0.24	-0.02	-2.63e-04	1.21e-04	-2.32e-04
22	37	0.03	0.31	-0.02	-4.18e-04	1.17e-04	-6.44e-05
22	38	-0.11	-0.22	-0.02	-2.72e-04	-2.35e-05	-1.88e-04
22	39	0.07	0.27	-0.03	-4.09e-04	1.40e-04	-1.78e-04
22	40	0.17	-0.21	-0.02	-2.70e-04	2.61e-04	-1.03e-04
22	41	-0.11	0.28	-0.02	-4.11e-04	-2.27e-05	-1.94e-04
22	42	-6.11e-03	-0.21	-0.02	-2.72e-04	9.82e-05	-1.19e-04
22	43	0.05	0.27	-0.03	-4.05e-04	1.31e-04	-2.08e-04
22	44	0.15	-0.22	-0.02	-2.67e-04	2.52e-04	-1.33e-04
22	45	-0.09	0.29	-0.02	-4.14e-04	-1.36e-05	-1.64e-04
22	46	9.18e-03	-0.20	-0.02	-2.76e-04	1.07e-04	-8.90e-05
22	47	-0.37	0.07	-0.01	-3.53e-04	-2.61e-04	-7.64e-05
22	48	0.43	3.42e-03	-0.03	-3.28e-04	4.99e-04	-2.20e-04
22	49	0.05	-0.37	-0.02	-2.26e-04	1.39e-04	-1.71e-04
22	50	0.01	0.44	-0.03	-4.55e-04	9.93e-05	-1.26e-04
23	1	0.04	0.04	-0.02	-3.18e-05	3.39e-05	1.74e-06
23	2	0.04	0.04	-0.02	-3.18e-05	3.37e-05	1.80e-06
23	3	0.05	0.05	-0.02	-3.15e-05	3.35e-05	0.0
23	4	0.05	0.05	-0.02	-3.15e-05	3.32e-05	0.0
23	5	0.03	0.03	-0.01	-2.30e-05	2.02e-05	1.89e-06
23	6	0.03	0.03	-0.01	-2.31e-05	2.00e-05	1.96e-06
23	7	0.03	0.04	-0.02	-2.27e-05	1.98e-05	0.0
23	8	0.03	0.04	-0.02	-2.28e-05	1.95e-05	0.0
23	9	0.04	0.04	-0.02	-3.19e-05	3.34e-05	1.87e-06
23	10	0.04	0.05	-0.02	-3.16e-05	3.36e-05	0.0
23	11	0.04	0.05	-0.02	-3.16e-05	3.31e-05	0.0
23	12	0.03	0.03	-0.01	-2.31e-05	1.97e-05	2.02e-06
23	13	0.03	0.03	-0.02	-2.28e-05	1.99e-05	0.0
23	14	0.03	0.04	-0.02	-2.29e-05	1.94e-05	0.0
23	15	0.34	0.10	-0.02	-1.03e-04	5.49e-04	-3.41e-04
23	16	0.30	-0.07	-0.03	-4.74e-05	4.80e-04	-3.70e-04
23	17	-0.24	0.13	-2.38e-03	1.60e-06	-4.40e-04	3.72e-04
23	18	-0.28	-0.03	-6.25e-03	5.73e-05	-5.09e-04	3.43e-04
23	19	0.30	0.09	-0.02	-1.01e-04	4.86e-04	-3.41e-04
23	20	0.33	-0.05	-0.03	-4.97e-05	5.44e-04	-3.70e-04
23	21	-0.27	0.12	-1.43e-03	3.82e-06	-5.04e-04	3.72e-04
23	22	-0.24	-0.02	-7.21e-03	5.50e-05	-4.46e-04	3.43e-04
23	23	0.29	0.05	-0.03	-9.02e-05	4.85e-04	-3.53e-04
23	24	0.25	-0.11	-0.03	-3.46e-05	4.16e-04	-3.82e-04
23	25	-0.19	0.18	-1.08e-03	-1.13e-05	-3.76e-04	3.84e-04
23	26	-0.23	0.01	-4.95e-03	4.44e-05	-4.45e-04	3.55e-04
23	27	0.25	0.04	-0.02	-8.80e-05	4.21e-04	-3.53e-04
23	28	0.28	-0.10	-0.03	-3.68e-05	4.79e-04	-3.83e-04
23	29	-0.22	0.17	-1.21e-04	-9.03e-06	-4.39e-04	3.85e-04
23	30	-0.19	0.03	-5.90e-03	4.22e-05	-3.81e-04	3.55e-04
23	31	0.18	0.30	-0.01	-1.31e-04	2.84e-04	-5.79e-05
23	32	0.05	-0.25	-0.02	5.41e-05	5.33e-05	-1.54e-04
23	33	0.01	0.31	-5.44e-03	-1.00e-04	-1.32e-05	1.56e-04
23	34	-0.12	-0.24	-0.02	8.55e-05	-2.43e-04	5.98e-05

23	35	0.17	0.29	-0.01	-1.28e-04	2.64e-04	-6.17e-05
23	36	0.03	-0.26	-0.03	5.80e-05	3.40e-05	-1.58e-04
23	37	0.03	0.33	-5.05e-03	-1.04e-04	6.09e-06	1.60e-04
23	38	-0.11	-0.22	-0.02	8.17e-05	-2.24e-04	6.36e-05
23	39	0.07	0.26	-8.73e-03	-1.24e-04	7.17e-05	-5.68e-05
23	40	0.17	-0.20	-0.03	4.67e-05	2.65e-04	-1.55e-04
23	41	-0.11	0.27	-2.24e-03	-9.26e-05	-2.25e-04	1.57e-04
23	42	-5.73e-03	-0.19	-0.02	7.81e-05	-3.16e-05	5.87e-05
23	43	0.05	0.24	-9.12e-03	-1.20e-04	5.24e-05	-6.05e-05
23	44	0.15	-0.22	-0.03	5.06e-05	2.46e-04	-1.59e-04
23	45	-0.09	0.28	-1.85e-03	-9.64e-05	-2.06e-04	1.61e-04
23	46	9.56e-03	-0.18	-0.02	7.43e-05	-1.23e-05	6.24e-05
23	47	-0.37	0.10	2.03e-03	2.80e-05	-6.67e-04	5.21e-04
23	48	0.43	-0.03	-0.03	-7.38e-05	7.07e-04	-5.19e-04
23	49	0.05	-0.37	-0.03	1.19e-04	5.85e-05	-3.90e-05
23	50	0.01	0.44	-2.55e-03	-1.65e-04	-1.83e-05	4.09e-05
24	1	0.05	0.04	-0.02	-4.93e-06	1.35e-04	-3.22e-05
24	2	0.05	0.04	-0.02	-4.94e-06	1.35e-04	-3.23e-05
24	3	0.06	0.04	-0.03	-4.50e-06	1.30e-04	-3.98e-05
24	4	0.06	0.04	-0.03	-4.51e-06	1.30e-04	-3.99e-05
24	5	0.04	0.03	-0.02	-3.60e-06	9.27e-05	-2.25e-05
24	6	0.04	0.03	-0.02	-3.61e-06	9.29e-05	-2.26e-05
24	7	0.05	0.03	-0.02	-3.17e-06	8.80e-05	-3.01e-05
24	8	0.05	0.03	-0.02	-3.18e-06	8.82e-05	-3.02e-05
24	9	0.05	0.04	-0.02	-4.96e-06	1.35e-04	-3.23e-05
24	10	0.06	0.04	-0.03	-4.63e-06	1.31e-04	-3.75e-05
24	11	0.06	0.04	-0.03	-4.65e-06	1.32e-04	-3.77e-05
24	12	0.04	0.03	-0.02	-3.63e-06	9.31e-05	-2.27e-05
24	13	0.04	0.03	-0.02	-3.30e-06	8.94e-05	-2.78e-05
24	14	0.04	0.03	-0.02	-3.33e-06	8.99e-05	-2.80e-05
24	15	0.55	0.11	-0.03	-1.43e-05	7.10e-04	-4.51e-04
24	16	0.49	-0.01	-0.03	-1.22e-05	7.85e-04	-3.82e-04
24	17	-0.41	0.07	-2.85e-03	5.31e-06	-6.03e-04	3.31e-04
24	18	-0.47	-0.05	-4.30e-03	7.42e-06	-5.28e-04	4.00e-04
24	19	0.54	0.13	-0.03	-1.45e-05	7.16e-04	-4.57e-04
24	20	0.51	-0.03	-0.03	-1.19e-05	7.78e-04	-3.76e-04
24	21	-0.42	0.09	-2.53e-03	5.08e-06	-5.97e-04	3.25e-04
24	22	-0.46	-0.07	-4.62e-03	7.65e-06	-5.35e-04	4.06e-04
24	23	0.49	0.15	-0.03	-1.17e-05	6.30e-04	-4.89e-04
24	24	0.43	0.02	-0.03	-9.56e-06	7.05e-04	-4.20e-04
24	25	-0.35	0.04	-4.52e-03	2.71e-06	-5.23e-04	3.69e-04
24	26	-0.41	-0.09	-5.97e-03	4.82e-06	-4.48e-04	4.38e-04
24	27	0.48	0.16	-0.03	-1.19e-05	6.36e-04	-4.95e-04
24	28	0.45	4.24e-03	-0.03	-9.33e-06	6.99e-04	-4.14e-04
24	29	-0.37	0.06	-4.20e-03	2.48e-06	-5.17e-04	3.63e-04
24	30	-0.40	-0.10	-6.28e-03	5.05e-06	-4.55e-04	4.44e-04
24	31	0.29	0.25	-0.02	-9.88e-06	1.63e-04	-2.58e-04
24	32	0.08	-0.17	-0.02	-2.85e-06	4.12e-04	-2.81e-05
24	33	-3.00e-03	0.23	-0.01	-4.01e-06	-2.30e-04	-2.30e-05
24	34	-0.20	-0.19	-0.02	3.02e-06	1.83e-05	2.06e-04
24	35	0.27	0.26	-0.02	-9.10e-06	1.39e-04	-2.69e-04
24	36	0.07	-0.16	-0.02	-2.07e-06	3.88e-04	-3.94e-05
24	37	0.01	0.22	-0.01	-4.79e-06	-2.07e-04	-1.17e-05
24	38	-0.19	-0.20	-0.02	2.24e-06	4.22e-05	2.18e-04
24	39	0.24	0.30	-0.02	-1.07e-05	1.84e-04	-2.78e-04
24	40	0.13	-0.23	-0.03	-2.08e-06	3.91e-04	-7.90e-06
24	41	-0.05	0.29	-0.01	-4.78e-06	-2.10e-04	-4.32e-05
24	42	-0.16	-0.24	-0.02	3.80e-06	-2.57e-06	2.27e-04
24	43	0.22	0.31	-0.02	-9.87e-06	1.60e-04	-2.89e-04
24	44	0.11	-0.22	-0.03	-1.30e-06	3.67e-04	-1.92e-05
24	45	-0.03	0.28	-0.01	-5.56e-06	-1.86e-04	-3.19e-05
24	46	-0.14	-0.25	-0.02	3.02e-06	2.14e-05	2.38e-04
24	47	-0.65	-0.03	1.57e-03	9.07e-06	-8.05e-04	5.73e-04
24	48	0.73	0.09	-0.04	-1.59e-05	9.87e-04	-6.24e-04
24	49	-0.02	-0.35	-0.02	2.37e-06	1.46e-04	1.60e-04
24	50	0.10	0.41	-0.02	-9.23e-06	3.52e-05	-2.11e-04
25	1	0.05	0.04	-0.02	-3.63e-06	1.03e-04	-2.40e-05
25	2	0.05	0.04	-0.02	-3.65e-06	1.03e-04	-2.40e-05
25	3	0.06	0.05	-0.02	-3.03e-06	9.97e-05	-3.09e-05
25	4	0.06	0.05	-0.02	-3.05e-06	9.96e-05	-3.10e-05
25	5	0.03	0.03	-0.02	-2.79e-06	6.83e-05	-1.65e-05
25	6	0.03	0.03	-0.02	-2.80e-06	6.82e-05	-1.65e-05
25	7	0.04	0.04	-0.02	-2.19e-06	6.50e-05	-2.34e-05
25	8	0.04	0.04	-0.02	-2.21e-06	6.50e-05	-2.35e-05
25	9	0.05	0.04	-0.02	-3.66e-06	1.03e-04	-2.41e-05
25	10	0.06	0.04	-0.02	-3.21e-06	1.01e-04	-2.88e-05
25	11	0.06	0.04	-0.02	-3.24e-06	1.01e-04	-2.89e-05

25	12	0.03	0.03	-0.02	-2.82e-06	6.81e-05	-1.66e-05
25	13	0.04	0.03	-0.02	-2.37e-06	6.60e-05	-2.13e-05
25	14	0.04	0.03	-0.02	-2.40e-06	6.59e-05	-2.14e-05
25	15	0.56	0.09	-0.03	2.23e-06	7.14e-04	-4.60e-04
25	16	0.49	-0.07	-0.03	5.30e-06	7.91e-04	-3.82e-04
25	17	-0.42	0.13	-2.23e-04	-1.04e-05	-6.57e-04	3.44e-04
25	18	-0.48	-0.03	-1.75e-03	-7.32e-06	-5.80e-04	4.21e-04
25	19	0.54	0.08	-0.03	2.88e-06	7.21e-04	-4.58e-04
25	20	0.51	-0.06	-0.03	4.65e-06	7.84e-04	-3.85e-04
25	21	-0.43	0.12	1.77e-06	-9.75e-06	-6.51e-04	3.46e-04
25	22	-0.47	-0.02	-1.98e-03	-7.98e-06	-5.87e-04	4.19e-04
25	23	0.49	0.05	-0.03	1.20e-06	6.26e-04	-4.53e-04
25	24	0.42	-0.11	-0.03	4.28e-06	7.03e-04	-3.75e-04
25	25	-0.35	0.18	-2.29e-03	-9.38e-06	-5.69e-04	3.37e-04
25	26	-0.42	0.02	-3.82e-03	-6.30e-06	-4.92e-04	4.14e-04
25	27	0.48	0.03	-0.03	1.86e-06	6.33e-04	-4.50e-04
25	28	0.44	-0.10	-0.03	3.62e-06	6.96e-04	-3.77e-04
25	29	-0.37	0.16	-2.07e-03	-8.72e-06	-5.62e-04	3.39e-04
25	30	-0.40	0.03	-4.05e-03	-6.95e-06	-4.99e-04	4.12e-04
25	31	0.29	0.29	-0.02	-5.79e-06	1.45e-04	-2.69e-04
25	32	0.07	-0.24	-0.02	4.48e-06	4.01e-04	-1.07e-05
25	33	1.99e-03	0.30	-9.67e-03	-9.57e-06	-2.67e-04	-2.78e-05
25	34	-0.22	-0.23	-0.01	0.0	-1.06e-05	2.30e-04
25	35	0.27	0.28	-0.02	-6.09e-06	1.18e-04	-2.67e-04
25	36	0.05	-0.26	-0.02	4.17e-06	3.74e-04	-8.51e-06
25	37	0.02	0.32	-0.01	-9.27e-06	-2.40e-04	-3.00e-05
25	38	-0.20	-0.22	-0.02	0.0	1.58e-05	2.28e-04
25	39	0.24	0.25	-0.02	-3.60e-06	1.67e-04	-2.61e-04
25	40	0.13	-0.20	-0.03	2.29e-06	3.79e-04	-1.84e-05
25	41	-0.05	0.26	-8.92e-03	-7.39e-06	-2.45e-04	-2.01e-05
25	42	-0.17	-0.19	-0.02	-1.49e-06	-3.26e-05	2.23e-04
25	43	0.22	0.24	-0.02	-3.91e-06	1.40e-04	-2.59e-04
25	44	0.11	-0.21	-0.02	1.99e-06	3.52e-04	-1.62e-05
25	45	-0.03	0.27	-9.55e-03	-7.08e-06	-2.18e-04	-2.23e-05
25	46	-0.15	-0.17	-0.02	-1.19e-06	-6.14e-06	2.20e-04
25	47	-0.65	0.10	4.92e-03	-1.06e-05	-8.76e-04	5.43e-04
25	48	0.73	-0.04	-0.04	5.48e-06	1.01e-03	-5.82e-04
25	49	-0.03	-0.36	-0.02	3.65e-06	1.23e-04	1.70e-04
25	50	0.10	0.42	-0.01	-8.75e-06	1.12e-05	-2.09e-04
26	1	0.0	0.0	0.0	0.0	0.0	0.0
26	2	0.0	0.0	0.0	0.0	0.0	0.0
26	3	0.0	0.0	0.0	0.0	0.0	0.0
26	4	0.0	0.0	0.0	0.0	0.0	0.0
26	5	0.0	0.0	0.0	0.0	0.0	0.0
26	6	0.0	0.0	0.0	0.0	0.0	0.0
26	7	0.0	0.0	0.0	0.0	0.0	0.0
26	8	0.0	0.0	0.0	0.0	0.0	0.0
26	9	0.0	0.0	0.0	0.0	0.0	0.0
26	10	0.0	0.0	0.0	0.0	0.0	0.0
26	11	0.0	0.0	0.0	0.0	0.0	0.0
26	12	0.0	0.0	0.0	0.0	0.0	0.0
26	13	0.0	0.0	0.0	0.0	0.0	0.0
26	14	0.0	0.0	0.0	0.0	0.0	0.0
26	15	0.0	0.0	0.0	0.0	0.0	0.0
26	16	0.0	0.0	0.0	0.0	0.0	0.0
26	17	0.0	0.0	0.0	0.0	0.0	0.0
26	18	0.0	0.0	0.0	0.0	0.0	0.0
26	19	0.0	0.0	0.0	0.0	0.0	0.0
26	20	0.0	0.0	0.0	0.0	0.0	0.0
26	21	0.0	0.0	0.0	0.0	0.0	0.0
26	22	0.0	0.0	0.0	0.0	0.0	0.0
26	23	0.0	0.0	0.0	0.0	0.0	0.0
26	24	0.0	0.0	0.0	0.0	0.0	0.0
26	25	0.0	0.0	0.0	0.0	0.0	0.0
26	26	0.0	0.0	0.0	0.0	0.0	0.0
26	27	0.0	0.0	0.0	0.0	0.0	0.0
26	28	0.0	0.0	0.0	0.0	0.0	0.0
26	29	0.0	0.0	0.0	0.0	0.0	0.0
26	30	0.0	0.0	0.0	0.0	0.0	0.0
26	31	0.0	0.0	0.0	0.0	0.0	0.0
26	32	0.0	0.0	0.0	0.0	0.0	0.0
26	33	0.0	0.0	0.0	0.0	0.0	0.0
26	34	0.0	0.0	0.0	0.0	0.0	0.0
26	35	0.0	0.0	0.0	0.0	0.0	0.0
26	36	0.0	0.0	0.0	0.0	0.0	0.0
26	37	0.0	0.0	0.0	0.0	0.0	0.0
26	38	0.0	0.0	0.0	0.0	0.0	0.0

26	39	0.0	0.0	0.0	0.0	0.0	0.0
26	40	0.0	0.0	0.0	0.0	0.0	0.0
26	41	0.0	0.0	0.0	0.0	0.0	0.0
26	42	0.0	0.0	0.0	0.0	0.0	0.0
26	43	0.0	0.0	0.0	0.0	0.0	0.0
26	44	0.0	0.0	0.0	0.0	0.0	0.0
26	45	0.0	0.0	0.0	0.0	0.0	0.0
26	46	0.0	0.0	0.0	0.0	0.0	0.0
26	47	0.0	0.0	0.0	0.0	0.0	0.0
26	48	0.0	0.0	0.0	0.0	0.0	0.0
26	49	0.0	0.0	0.0	0.0	0.0	0.0
26	50	0.0	0.0	0.0	0.0	0.0	0.0
27	1	0.0	0.0	0.0	0.0	0.0	0.0
27	2	0.0	0.0	0.0	0.0	0.0	0.0
27	3	0.0	0.0	0.0	0.0	0.0	0.0
27	4	0.0	0.0	0.0	0.0	0.0	0.0
27	5	0.0	0.0	0.0	0.0	0.0	0.0
27	6	0.0	0.0	0.0	0.0	0.0	0.0
27	7	0.0	0.0	0.0	0.0	0.0	0.0
27	8	0.0	0.0	0.0	0.0	0.0	0.0
27	9	0.0	0.0	0.0	0.0	0.0	0.0
27	10	0.0	0.0	0.0	0.0	0.0	0.0
27	11	0.0	0.0	0.0	0.0	0.0	0.0
27	12	0.0	0.0	0.0	0.0	0.0	0.0
27	13	0.0	0.0	0.0	0.0	0.0	0.0
27	14	0.0	0.0	0.0	0.0	0.0	0.0
27	15	0.0	0.0	0.0	0.0	0.0	0.0
27	16	0.0	0.0	0.0	0.0	0.0	0.0
27	17	0.0	0.0	0.0	0.0	0.0	0.0
27	18	0.0	0.0	0.0	0.0	0.0	0.0
27	19	0.0	0.0	0.0	0.0	0.0	0.0
27	20	0.0	0.0	0.0	0.0	0.0	0.0
27	21	0.0	0.0	0.0	0.0	0.0	0.0
27	22	0.0	0.0	0.0	0.0	0.0	0.0
27	23	0.0	0.0	0.0	0.0	0.0	0.0
27	24	0.0	0.0	0.0	0.0	0.0	0.0
27	25	0.0	0.0	0.0	0.0	0.0	0.0
27	26	0.0	0.0	0.0	0.0	0.0	0.0
27	27	0.0	0.0	0.0	0.0	0.0	0.0
27	28	0.0	0.0	0.0	0.0	0.0	0.0
27	29	0.0	0.0	0.0	0.0	0.0	0.0
27	30	0.0	0.0	0.0	0.0	0.0	0.0
27	31	0.0	0.0	0.0	0.0	0.0	0.0
27	32	0.0	0.0	0.0	0.0	0.0	0.0
27	33	0.0	0.0	0.0	0.0	0.0	0.0
27	34	0.0	0.0	0.0	0.0	0.0	0.0
27	35	0.0	0.0	0.0	0.0	0.0	0.0
27	36	0.0	0.0	0.0	0.0	0.0	0.0
27	37	0.0	0.0	0.0	0.0	0.0	0.0
27	38	0.0	0.0	0.0	0.0	0.0	0.0
27	39	0.0	0.0	0.0	0.0	0.0	0.0
27	40	0.0	0.0	0.0	0.0	0.0	0.0
27	41	0.0	0.0	0.0	0.0	0.0	0.0
27	42	0.0	0.0	0.0	0.0	0.0	0.0
27	43	0.0	0.0	0.0	0.0	0.0	0.0
27	44	0.0	0.0	0.0	0.0	0.0	0.0
27	45	0.0	0.0	0.0	0.0	0.0	0.0
27	46	0.0	0.0	0.0	0.0	0.0	0.0
27	47	0.0	0.0	0.0	0.0	0.0	0.0
27	48	0.0	0.0	0.0	0.0	0.0	0.0
27	49	0.0	0.0	0.0	0.0	0.0	0.0
27	50	0.0	0.0	0.0	0.0	0.0	0.0
28	1	0.0	0.0	0.0	0.0	0.0	0.0
28	2	0.0	0.0	0.0	0.0	0.0	0.0
28	3	0.0	0.0	0.0	0.0	0.0	0.0
28	4	0.0	0.0	0.0	0.0	0.0	0.0
28	5	0.0	0.0	0.0	0.0	0.0	0.0
28	6	0.0	0.0	0.0	0.0	0.0	0.0
28	7	0.0	0.0	0.0	0.0	0.0	0.0
28	8	0.0	0.0	0.0	0.0	0.0	0.0
28	9	0.0	0.0	0.0	0.0	0.0	0.0
28	10	0.0	0.0	0.0	0.0	0.0	0.0
28	11	0.0	0.0	0.0	0.0	0.0	0.0
28	12	0.0	0.0	0.0	0.0	0.0	0.0
28	13	0.0	0.0	0.0	0.0	0.0	0.0
28	14	0.0	0.0	0.0	0.0	0.0	0.0
28	15	0.0	0.0	0.0	0.0	0.0	0.0

28	16	0.0	0.0	0.0	0.0	0.0	0.0
28	17	0.0	0.0	0.0	0.0	0.0	0.0
28	18	0.0	0.0	0.0	0.0	0.0	0.0
28	19	0.0	0.0	0.0	0.0	0.0	0.0
28	20	0.0	0.0	0.0	0.0	0.0	0.0
28	21	0.0	0.0	0.0	0.0	0.0	0.0
28	22	0.0	0.0	0.0	0.0	0.0	0.0
28	23	0.0	0.0	0.0	0.0	0.0	0.0
28	24	0.0	0.0	0.0	0.0	0.0	0.0
28	25	0.0	0.0	0.0	0.0	0.0	0.0
28	26	0.0	0.0	0.0	0.0	0.0	0.0
28	27	0.0	0.0	0.0	0.0	0.0	0.0
28	28	0.0	0.0	0.0	0.0	0.0	0.0
28	29	0.0	0.0	0.0	0.0	0.0	0.0
28	30	0.0	0.0	0.0	0.0	0.0	0.0
28	31	0.0	0.0	0.0	0.0	0.0	0.0
28	32	0.0	0.0	0.0	0.0	0.0	0.0
28	33	0.0	0.0	0.0	0.0	0.0	0.0
28	34	0.0	0.0	0.0	0.0	0.0	0.0
28	35	0.0	0.0	0.0	0.0	0.0	0.0
28	36	0.0	0.0	0.0	0.0	0.0	0.0
28	37	0.0	0.0	0.0	0.0	0.0	0.0
28	38	0.0	0.0	0.0	0.0	0.0	0.0
28	39	0.0	0.0	0.0	0.0	0.0	0.0
28	40	0.0	0.0	0.0	0.0	0.0	0.0
28	41	0.0	0.0	0.0	0.0	0.0	0.0
28	42	0.0	0.0	0.0	0.0	0.0	0.0
28	43	0.0	0.0	0.0	0.0	0.0	0.0
28	44	0.0	0.0	0.0	0.0	0.0	0.0
28	45	0.0	0.0	0.0	0.0	0.0	0.0
28	46	0.0	0.0	0.0	0.0	0.0	0.0
28	47	0.0	0.0	0.0	0.0	0.0	0.0
28	48	0.0	0.0	0.0	0.0	0.0	0.0
28	49	0.0	0.0	0.0	0.0	0.0	0.0
28	50	0.0	0.0	0.0	0.0	0.0	0.0
29	1	0.0	0.0	0.0	0.0	0.0	0.0
29	2	0.0	0.0	0.0	0.0	0.0	0.0
29	3	0.0	0.0	0.0	0.0	0.0	0.0
29	4	0.0	0.0	0.0	0.0	0.0	0.0
29	5	0.0	0.0	0.0	0.0	0.0	0.0
29	6	0.0	0.0	0.0	0.0	0.0	0.0
29	7	0.0	0.0	0.0	0.0	0.0	0.0
29	8	0.0	0.0	0.0	0.0	0.0	0.0
29	9	0.0	0.0	0.0	0.0	0.0	0.0
29	10	0.0	0.0	0.0	0.0	0.0	0.0
29	11	0.0	0.0	0.0	0.0	0.0	0.0
29	12	0.0	0.0	0.0	0.0	0.0	0.0
29	13	0.0	0.0	0.0	0.0	0.0	0.0
29	14	0.0	0.0	0.0	0.0	0.0	0.0
29	15	0.0	0.0	0.0	0.0	0.0	0.0
29	16	0.0	0.0	0.0	0.0	0.0	0.0
29	17	0.0	0.0	0.0	0.0	0.0	0.0
29	18	0.0	0.0	0.0	0.0	0.0	0.0
29	19	0.0	0.0	0.0	0.0	0.0	0.0
29	20	0.0	0.0	0.0	0.0	0.0	0.0
29	21	0.0	0.0	0.0	0.0	0.0	0.0
29	22	0.0	0.0	0.0	0.0	0.0	0.0
29	23	0.0	0.0	0.0	0.0	0.0	0.0
29	24	0.0	0.0	0.0	0.0	0.0	0.0
29	25	0.0	0.0	0.0	0.0	0.0	0.0
29	26	0.0	0.0	0.0	0.0	0.0	0.0
29	27	0.0	0.0	0.0	0.0	0.0	0.0
29	28	0.0	0.0	0.0	0.0	0.0	0.0
29	29	0.0	0.0	0.0	0.0	0.0	0.0
29	30	0.0	0.0	0.0	0.0	0.0	0.0
29	31	0.0	0.0	0.0	0.0	0.0	0.0
29	32	0.0	0.0	0.0	0.0	0.0	0.0
29	33	0.0	0.0	0.0	0.0	0.0	0.0
29	34	0.0	0.0	0.0	0.0	0.0	0.0
29	35	0.0	0.0	0.0	0.0	0.0	0.0
29	36	0.0	0.0	0.0	0.0	0.0	0.0
29	37	0.0	0.0	0.0	0.0	0.0	0.0
29	38	0.0	0.0	0.0	0.0	0.0	0.0
29	39	0.0	0.0	0.0	0.0	0.0	0.0
29	40	0.0	0.0	0.0	0.0	0.0	0.0
29	41	0.0	0.0	0.0	0.0	0.0	0.0
29	42	0.0	0.0	0.0	0.0	0.0	0.0

29	43	0.0	0.0	0.0	0.0	0.0	0.0
29	44	0.0	0.0	0.0	0.0	0.0	0.0
29	45	0.0	0.0	0.0	0.0	0.0	0.0
29	46	0.0	0.0	0.0	0.0	0.0	0.0
29	47	0.0	0.0	0.0	0.0	0.0	0.0
29	48	0.0	0.0	0.0	0.0	0.0	0.0
29	49	0.0	0.0	0.0	0.0	0.0	0.0
29	50	0.0	0.0	0.0	0.0	0.0	0.0
30	1	0.0	0.0	0.0	0.0	0.0	0.0
30	2	0.0	0.0	0.0	0.0	0.0	0.0
30	3	0.0	0.0	0.0	0.0	0.0	0.0
30	4	0.0	0.0	0.0	0.0	0.0	0.0
30	5	0.0	0.0	0.0	0.0	0.0	0.0
30	6	0.0	0.0	0.0	0.0	0.0	0.0
30	7	0.0	0.0	0.0	0.0	0.0	0.0
30	8	0.0	0.0	0.0	0.0	0.0	0.0
30	9	0.0	0.0	0.0	0.0	0.0	0.0
30	10	0.0	0.0	0.0	0.0	0.0	0.0
30	11	0.0	0.0	0.0	0.0	0.0	0.0
30	12	0.0	0.0	0.0	0.0	0.0	0.0
30	13	0.0	0.0	0.0	0.0	0.0	0.0
30	14	0.0	0.0	0.0	0.0	0.0	0.0
30	15	0.0	0.0	0.0	0.0	0.0	0.0
30	16	0.0	0.0	0.0	0.0	0.0	0.0
30	17	0.0	0.0	0.0	0.0	0.0	0.0
30	18	0.0	0.0	0.0	0.0	0.0	0.0
30	19	0.0	0.0	0.0	0.0	0.0	0.0
30	20	0.0	0.0	0.0	0.0	0.0	0.0
30	21	0.0	0.0	0.0	0.0	0.0	0.0
30	22	0.0	0.0	0.0	0.0	0.0	0.0
30	23	0.0	0.0	0.0	0.0	0.0	0.0
30	24	0.0	0.0	0.0	0.0	0.0	0.0
30	25	0.0	0.0	0.0	0.0	0.0	0.0
30	26	0.0	0.0	0.0	0.0	0.0	0.0
30	27	0.0	0.0	0.0	0.0	0.0	0.0
30	28	0.0	0.0	0.0	0.0	0.0	0.0
30	29	0.0	0.0	0.0	0.0	0.0	0.0
30	30	0.0	0.0	0.0	0.0	0.0	0.0
30	31	0.0	0.0	0.0	0.0	0.0	0.0
30	32	0.0	0.0	0.0	0.0	0.0	0.0
30	33	0.0	0.0	0.0	0.0	0.0	0.0
30	34	0.0	0.0	0.0	0.0	0.0	0.0
30	35	0.0	0.0	0.0	0.0	0.0	0.0
30	36	0.0	0.0	0.0	0.0	0.0	0.0
30	37	0.0	0.0	0.0	0.0	0.0	0.0
30	38	0.0	0.0	0.0	0.0	0.0	0.0
30	39	0.0	0.0	0.0	0.0	0.0	0.0
30	40	0.0	0.0	0.0	0.0	0.0	0.0
30	41	0.0	0.0	0.0	0.0	0.0	0.0
30	42	0.0	0.0	0.0	0.0	0.0	0.0
30	43	0.0	0.0	0.0	0.0	0.0	0.0
30	44	0.0	0.0	0.0	0.0	0.0	0.0
30	45	0.0	0.0	0.0	0.0	0.0	0.0
30	46	0.0	0.0	0.0	0.0	0.0	0.0
30	47	0.0	0.0	0.0	0.0	0.0	0.0
30	48	0.0	0.0	0.0	0.0	0.0	0.0
30	49	0.0	0.0	0.0	0.0	0.0	0.0
30	50	0.0	0.0	0.0	0.0	0.0	0.0
31	1	0.0	0.0	0.0	0.0	0.0	0.0
31	2	0.0	0.0	0.0	0.0	0.0	0.0
31	3	0.0	0.0	0.0	0.0	0.0	0.0
31	4	0.0	0.0	0.0	0.0	0.0	0.0
31	5	0.0	0.0	0.0	0.0	0.0	0.0
31	6	0.0	0.0	0.0	0.0	0.0	0.0
31	7	0.0	0.0	0.0	0.0	0.0	0.0
31	8	0.0	0.0	0.0	0.0	0.0	0.0
31	9	0.0	0.0	0.0	0.0	0.0	0.0
31	10	0.0	0.0	0.0	0.0	0.0	0.0
31	11	0.0	0.0	0.0	0.0	0.0	0.0
31	12	0.0	0.0	0.0	0.0	0.0	0.0
31	13	0.0	0.0	0.0	0.0	0.0	0.0
31	14	0.0	0.0	0.0	0.0	0.0	0.0
31	15	0.0	0.0	0.0	0.0	0.0	0.0
31	16	0.0	0.0	0.0	0.0	0.0	0.0
31	17	0.0	0.0	0.0	0.0	0.0	0.0
31	18	0.0	0.0	0.0	0.0	0.0	0.0
31	19	0.0	0.0	0.0	0.0	0.0	0.0

31	20	0.0	0.0	0.0	0.0	0.0	0.0
31	21	0.0	0.0	0.0	0.0	0.0	0.0
31	22	0.0	0.0	0.0	0.0	0.0	0.0
31	23	0.0	0.0	0.0	0.0	0.0	0.0
31	24	0.0	0.0	0.0	0.0	0.0	0.0
31	25	0.0	0.0	0.0	0.0	0.0	0.0
31	26	0.0	0.0	0.0	0.0	0.0	0.0
31	27	0.0	0.0	0.0	0.0	0.0	0.0
31	28	0.0	0.0	0.0	0.0	0.0	0.0
31	29	0.0	0.0	0.0	0.0	0.0	0.0
31	30	0.0	0.0	0.0	0.0	0.0	0.0
31	31	0.0	0.0	0.0	0.0	0.0	0.0
31	32	0.0	0.0	0.0	0.0	0.0	0.0
31	33	0.0	0.0	0.0	0.0	0.0	0.0
31	34	0.0	0.0	0.0	0.0	0.0	0.0
31	35	0.0	0.0	0.0	0.0	0.0	0.0
31	36	0.0	0.0	0.0	0.0	0.0	0.0
31	37	0.0	0.0	0.0	0.0	0.0	0.0
31	38	0.0	0.0	0.0	0.0	0.0	0.0
31	39	0.0	0.0	0.0	0.0	0.0	0.0
31	40	0.0	0.0	0.0	0.0	0.0	0.0
31	41	0.0	0.0	0.0	0.0	0.0	0.0
31	42	0.0	0.0	0.0	0.0	0.0	0.0
31	43	0.0	0.0	0.0	0.0	0.0	0.0
31	44	0.0	0.0	0.0	0.0	0.0	0.0
31	45	0.0	0.0	0.0	0.0	0.0	0.0
31	46	0.0	0.0	0.0	0.0	0.0	0.0
31	47	0.0	0.0	0.0	0.0	0.0	0.0
31	48	0.0	0.0	0.0	0.0	0.0	0.0
31	49	0.0	0.0	0.0	0.0	0.0	0.0
31	50	0.0	0.0	0.0	0.0	0.0	0.0
32	1	0.0	0.0	0.0	0.0	0.0	0.0
32	2	0.0	0.0	0.0	0.0	0.0	0.0
32	3	0.0	0.0	0.0	0.0	0.0	0.0
32	4	0.0	0.0	0.0	0.0	0.0	0.0
32	5	0.0	0.0	0.0	0.0	0.0	0.0
32	6	0.0	0.0	0.0	0.0	0.0	0.0
32	7	0.0	0.0	0.0	0.0	0.0	0.0
32	8	0.0	0.0	0.0	0.0	0.0	0.0
32	9	0.0	0.0	0.0	0.0	0.0	0.0
32	10	0.0	0.0	0.0	0.0	0.0	0.0
32	11	0.0	0.0	0.0	0.0	0.0	0.0
32	12	0.0	0.0	0.0	0.0	0.0	0.0
32	13	0.0	0.0	0.0	0.0	0.0	0.0
32	14	0.0	0.0	0.0	0.0	0.0	0.0
32	15	0.0	0.0	0.0	0.0	0.0	0.0
32	16	0.0	0.0	0.0	0.0	0.0	0.0
32	17	0.0	0.0	0.0	0.0	0.0	0.0
32	18	0.0	0.0	0.0	0.0	0.0	0.0
32	19	0.0	0.0	0.0	0.0	0.0	0.0
32	20	0.0	0.0	0.0	0.0	0.0	0.0
32	21	0.0	0.0	0.0	0.0	0.0	0.0
32	22	0.0	0.0	0.0	0.0	0.0	0.0
32	23	0.0	0.0	0.0	0.0	0.0	0.0
32	24	0.0	0.0	0.0	0.0	0.0	0.0
32	25	0.0	0.0	0.0	0.0	0.0	0.0
32	26	0.0	0.0	0.0	0.0	0.0	0.0
32	27	0.0	0.0	0.0	0.0	0.0	0.0
32	28	0.0	0.0	0.0	0.0	0.0	0.0
32	29	0.0	0.0	0.0	0.0	0.0	0.0
32	30	0.0	0.0	0.0	0.0	0.0	0.0
32	31	0.0	0.0	0.0	0.0	0.0	0.0
32	32	0.0	0.0	0.0	0.0	0.0	0.0
32	33	0.0	0.0	0.0	0.0	0.0	0.0
32	34	0.0	0.0	0.0	0.0	0.0	0.0
32	35	0.0	0.0	0.0	0.0	0.0	0.0
32	36	0.0	0.0	0.0	0.0	0.0	0.0
32	37	0.0	0.0	0.0	0.0	0.0	0.0
32	38	0.0	0.0	0.0	0.0	0.0	0.0
32	39	0.0	0.0	0.0	0.0	0.0	0.0
32	40	0.0	0.0	0.0	0.0	0.0	0.0
32	41	0.0	0.0	0.0	0.0	0.0	0.0
32	42	0.0	0.0	0.0	0.0	0.0	0.0
32	43	0.0	0.0	0.0	0.0	0.0	0.0
32	44	0.0	0.0	0.0	0.0	0.0	0.0
32	45	0.0	0.0	0.0	0.0	0.0	0.0
32	46	0.0	0.0	0.0	0.0	0.0	0.0

32	47	0.0	0.0	0.0	0.0	0.0	0.0
32	48	0.0	0.0	0.0	0.0	0.0	0.0
32	49	0.0	0.0	0.0	0.0	0.0	0.0
32	50	0.0	0.0	0.0	0.0	0.0	0.0
33	1	0.0	0.0	0.0	0.0	0.0	0.0
33	2	0.0	0.0	0.0	0.0	0.0	0.0
33	3	0.0	0.0	0.0	0.0	0.0	0.0
33	4	0.0	0.0	0.0	0.0	0.0	0.0
33	5	0.0	0.0	0.0	0.0	0.0	0.0
33	6	0.0	0.0	0.0	0.0	0.0	0.0
33	7	0.0	0.0	0.0	0.0	0.0	0.0
33	8	0.0	0.0	0.0	0.0	0.0	0.0
33	9	0.0	0.0	0.0	0.0	0.0	0.0
33	10	0.0	0.0	0.0	0.0	0.0	0.0
33	11	0.0	0.0	0.0	0.0	0.0	0.0
33	12	0.0	0.0	0.0	0.0	0.0	0.0
33	13	0.0	0.0	0.0	0.0	0.0	0.0
33	14	0.0	0.0	0.0	0.0	0.0	0.0
33	15	0.0	0.0	0.0	0.0	0.0	0.0
33	16	0.0	0.0	0.0	0.0	0.0	0.0
33	17	0.0	0.0	0.0	0.0	0.0	0.0
33	18	0.0	0.0	0.0	0.0	0.0	0.0
33	19	0.0	0.0	0.0	0.0	0.0	0.0
33	20	0.0	0.0	0.0	0.0	0.0	0.0
33	21	0.0	0.0	0.0	0.0	0.0	0.0
33	22	0.0	0.0	0.0	0.0	0.0	0.0
33	23	0.0	0.0	0.0	0.0	0.0	0.0
33	24	0.0	0.0	0.0	0.0	0.0	0.0
33	25	0.0	0.0	0.0	0.0	0.0	0.0
33	26	0.0	0.0	0.0	0.0	0.0	0.0
33	27	0.0	0.0	0.0	0.0	0.0	0.0
33	28	0.0	0.0	0.0	0.0	0.0	0.0
33	29	0.0	0.0	0.0	0.0	0.0	0.0
33	30	0.0	0.0	0.0	0.0	0.0	0.0
33	31	0.0	0.0	0.0	0.0	0.0	0.0
33	32	0.0	0.0	0.0	0.0	0.0	0.0
33	33	0.0	0.0	0.0	0.0	0.0	0.0
33	34	0.0	0.0	0.0	0.0	0.0	0.0
33	35	0.0	0.0	0.0	0.0	0.0	0.0
33	36	0.0	0.0	0.0	0.0	0.0	0.0
33	37	0.0	0.0	0.0	0.0	0.0	0.0
33	38	0.0	0.0	0.0	0.0	0.0	0.0
33	39	0.0	0.0	0.0	0.0	0.0	0.0
33	40	0.0	0.0	0.0	0.0	0.0	0.0
33	41	0.0	0.0	0.0	0.0	0.0	0.0
33	42	0.0	0.0	0.0	0.0	0.0	0.0
33	43	0.0	0.0	0.0	0.0	0.0	0.0
33	44	0.0	0.0	0.0	0.0	0.0	0.0
33	45	0.0	0.0	0.0	0.0	0.0	0.0
33	46	0.0	0.0	0.0	0.0	0.0	0.0
33	47	0.0	0.0	0.0	0.0	0.0	0.0
33	48	0.0	0.0	0.0	0.0	0.0	0.0
33	49	0.0	0.0	0.0	0.0	0.0	0.0
33	50	0.0	0.0	0.0	0.0	0.0	0.0
34	1	0.04	0.04	-0.03	-4.79e-04	1.87e-04	-2.15e-04
34	2	0.04	0.04	-0.03	-4.78e-04	1.87e-04	-2.15e-04
34	3	0.04	0.05	-0.03	-4.77e-04	1.87e-04	-2.15e-04
34	4	0.04	0.05	-0.03	-4.77e-04	1.87e-04	-2.15e-04
34	5	0.03	0.03	-0.02	-3.41e-04	1.29e-04	-1.53e-04
34	6	0.03	0.03	-0.02	-3.41e-04	1.29e-04	-1.53e-04
34	7	0.03	0.04	-0.02	-3.40e-04	1.29e-04	-1.53e-04
34	8	0.03	0.04	-0.02	-3.40e-04	1.30e-04	-1.53e-04
34	9	0.04	0.04	-0.03	-4.78e-04	1.87e-04	-2.15e-04
34	10	0.04	0.05	-0.03	-4.78e-04	1.87e-04	-2.15e-04
34	11	0.04	0.05	-0.03	-4.78e-04	1.87e-04	-2.15e-04
34	12	0.03	0.03	-0.02	-3.41e-04	1.29e-04	-1.53e-04
34	13	0.03	0.04	-0.02	-3.41e-04	1.29e-04	-1.53e-04
34	14	0.03	0.04	-0.02	-3.40e-04	1.30e-04	-1.53e-04
34	15	0.34	0.12	-0.03	-3.54e-04	4.32e-04	-1.09e-04
34	16	0.30	-0.02	-0.03	-3.13e-04	3.85e-04	-1.48e-04
34	17	-0.24	0.09	-0.01	-3.69e-04	-1.26e-04	-1.58e-04
34	18	-0.28	-0.05	-0.01	-3.28e-04	-1.74e-04	-1.96e-04
34	19	0.30	0.13	-0.03	-3.57e-04	3.92e-04	-1.37e-04
34	20	0.33	-0.03	-0.03	-3.09e-04	4.26e-04	-1.20e-04
34	21	-0.27	0.10	-0.01	-3.73e-04	-1.67e-04	-1.86e-04
34	22	-0.24	-0.06	-0.01	-3.24e-04	-1.33e-04	-1.68e-04
34	23	0.29	0.13	-0.03	-3.71e-04	4.01e-04	-2.10e-04

34	24	0.25	-5.47e-03	-0.03	-3.30e-04	3.53e-04	-2.49e-04
34	25	-0.19	0.07	-0.02	-3.52e-04	-9.46e-05	-5.67e-05
34	26	-0.23	-0.07	-0.01	-3.11e-04	-1.42e-04	-9.55e-05
34	27	0.25	0.14	-0.03	-3.74e-04	3.60e-04	-2.38e-04
34	28	0.28	-0.01	-0.03	-3.26e-04	3.94e-04	-2.21e-04
34	29	-0.22	0.08	-0.02	-3.56e-04	-1.35e-04	-8.46e-05
34	30	-0.19	-0.07	-0.01	-3.07e-04	-1.01e-04	-6.75e-05
34	31	0.18	0.27	-0.03	-4.07e-04	2.92e-04	-8.10e-05
34	32	0.05	-0.19	-0.02	-2.70e-04	1.34e-04	-2.10e-04
34	33	9.91e-03	0.26	-0.02	-4.12e-04	1.25e-04	-9.55e-05
34	34	-0.12	-0.20	-0.02	-2.75e-04	-3.38e-05	-2.25e-04
34	35	0.17	0.28	-0.03	-4.12e-04	2.83e-04	-1.11e-04
34	36	0.03	-0.19	-0.02	-2.75e-04	1.24e-04	-2.41e-04
34	37	0.03	0.26	-0.02	-4.07e-04	1.34e-04	-6.52e-05
34	38	-0.11	-0.21	-0.02	-2.70e-04	-2.43e-05	-1.95e-04
34	39	0.07	0.30	-0.02	-4.19e-04	1.56e-04	-1.74e-04
34	40	0.17	-0.22	-0.02	-2.58e-04	2.70e-04	-1.17e-04
34	41	-0.11	0.29	-0.02	-4.23e-04	-1.16e-05	-1.89e-04
34	42	-7.30e-03	-0.23	-0.02	-2.63e-04	1.03e-04	-1.32e-04
34	43	0.05	0.31	-0.02	-4.24e-04	1.47e-04	-2.04e-04
34	44	0.15	-0.22	-0.02	-2.64e-04	2.61e-04	-1.47e-04
34	45	-0.09	0.29	-0.02	-4.18e-04	-2.08e-06	-1.58e-04
34	46	7.97e-03	-0.24	-0.02	-2.58e-04	1.12e-04	-1.01e-04
34	47	-0.37	-4.65e-04	-0.01	-3.50e-04	-2.63e-04	-7.47e-05
34	48	0.43	0.07	-0.03	-3.32e-04	5.21e-04	-2.31e-04
34	49	0.05	-0.36	-0.02	-2.22e-04	1.02e-04	-1.86e-04
34	50	0.01	0.43	-0.02	-4.59e-04	1.56e-04	-1.19e-04
35	1	0.06	0.04	-0.03	-3.93e-06	1.29e-04	2.26e-05
35	2	0.06	0.04	-0.03	-3.95e-06	1.29e-04	2.27e-05
35	3	0.06	0.05	-0.03	-5.75e-06	1.23e-04	2.83e-05
35	4	0.06	0.05	-0.03	-5.77e-06	1.23e-04	2.83e-05
35	5	0.04	0.03	-0.02	-2.79e-06	8.88e-05	1.55e-05
35	6	0.04	0.03	-0.02	-2.81e-06	8.90e-05	1.56e-05
35	7	0.05	0.04	-0.02	-4.61e-06	8.27e-05	2.11e-05
35	8	0.05	0.04	-0.02	-4.63e-06	8.29e-05	2.12e-05
35	9	0.06	0.04	-0.03	-3.96e-06	1.30e-04	2.27e-05
35	10	0.06	0.04	-0.03	-5.20e-06	1.25e-04	2.66e-05
35	11	0.06	0.04	-0.03	-5.24e-06	1.25e-04	2.66e-05
35	12	0.04	0.03	-0.02	-2.83e-06	8.92e-05	1.56e-05
35	13	0.04	0.03	-0.02	-4.07e-06	8.46e-05	1.95e-05
35	14	0.04	0.03	-0.02	-4.10e-06	8.49e-05	1.95e-05
35	15	0.55	0.12	-0.04	-5.05e-06	6.97e-04	4.39e-04
35	16	0.50	-7.01e-03	-0.03	6.07e-06	7.64e-04	3.50e-04
35	17	-0.41	0.07	-5.08e-03	-1.31e-05	-5.91e-04	-3.15e-04
35	18	-0.47	-0.06	-3.02e-03	-1.99e-06	-5.25e-04	-4.03e-04
35	19	0.54	0.14	-0.04	-6.53e-06	7.03e-04	4.14e-04
35	20	0.51	-0.02	-0.03	7.55e-06	7.58e-04	3.75e-04
35	21	-0.43	0.09	-4.66e-03	-1.46e-05	-5.86e-04	-3.39e-04
35	22	-0.46	-0.08	-3.44e-03	0.0	-5.30e-04	-3.79e-04
35	23	0.52	0.16	-0.03	-4.52e-06	6.35e-04	3.44e-04
35	24	0.46	0.03	-0.03	6.61e-06	7.02e-04	2.56e-04
35	25	-0.38	0.03	-6.44e-03	-1.36e-05	-5.29e-04	-2.20e-04
35	26	-0.44	-0.10	-4.38e-03	-2.52e-06	-4.62e-04	-3.09e-04
35	27	0.51	0.18	-0.03	-5.99e-06	6.41e-04	3.20e-04
35	28	0.48	0.01	-0.03	8.08e-06	6.96e-04	2.80e-04
35	29	-0.39	0.05	-6.02e-03	-1.51e-05	-5.23e-04	-2.45e-04
35	30	-0.42	-0.11	-4.80e-03	-1.05e-06	-4.68e-04	-2.85e-04
35	31	0.28	0.26	-0.03	-2.09e-05	1.68e-04	2.78e-04
35	32	0.09	-0.18	-0.02	1.62e-05	3.91e-04	-1.67e-05
35	33	-8.63e-03	0.24	-0.02	-2.33e-05	-2.18e-04	5.22e-05
35	34	-0.20	-0.19	-0.01	1.38e-05	4.31e-06	-2.43e-04
35	35	0.27	0.27	-0.03	-2.07e-05	1.50e-04	2.50e-04
35	36	0.08	-0.17	-0.02	1.64e-05	3.72e-04	-4.50e-05
35	37	1.36e-03	0.23	-0.02	-2.34e-05	-1.99e-04	8.05e-05
35	38	-0.19	-0.20	-0.01	1.36e-05	2.30e-05	-2.14e-04
35	39	0.24	0.31	-0.03	-2.58e-05	1.87e-04	1.97e-04
35	40	0.13	-0.23	-0.02	2.11e-05	3.72e-04	6.45e-05
35	41	-0.05	0.29	-0.02	-2.82e-05	-1.99e-04	-2.89e-05
35	42	-0.16	-0.25	-0.01	1.87e-05	-1.46e-05	-1.62e-04
35	43	0.23	0.32	-0.03	-2.56e-05	1.69e-04	1.69e-04
35	44	0.12	-0.22	-0.02	2.13e-05	3.53e-04	3.62e-05
35	45	-0.04	0.28	-0.02	-2.83e-05	-1.81e-04	0.0
35	46	-0.15	-0.26	-0.01	1.86e-05	4.09e-06	-1.33e-04
35	47	-0.67	-0.04	1.85e-03	-8.47e-06	-8.05e-04	-4.24e-04
35	48	0.76	0.11	-0.04	1.43e-06	9.78e-04	4.60e-04
35	49	-0.03	-0.35	-0.02	2.97e-05	1.41e-04	-1.12e-04
35	50	0.11	0.42	-0.02	-3.67e-05	3.14e-05	1.48e-04

36	1	0.0	0.0	0.0	0.0	0.0	0.0
36	2	0.0	0.0	0.0	0.0	0.0	0.0
36	3	0.0	0.0	0.0	0.0	0.0	0.0
36	4	0.0	0.0	0.0	0.0	0.0	0.0
36	5	0.0	0.0	0.0	0.0	0.0	0.0
36	6	0.0	0.0	0.0	0.0	0.0	0.0
36	7	0.0	0.0	0.0	0.0	0.0	0.0
36	8	0.0	0.0	0.0	0.0	0.0	0.0
36	9	0.0	0.0	0.0	0.0	0.0	0.0
36	10	0.0	0.0	0.0	0.0	0.0	0.0
36	11	0.0	0.0	0.0	0.0	0.0	0.0
36	12	0.0	0.0	0.0	0.0	0.0	0.0
36	13	0.0	0.0	0.0	0.0	0.0	0.0
36	14	0.0	0.0	0.0	0.0	0.0	0.0
36	15	0.0	0.0	0.0	0.0	0.0	0.0
36	16	0.0	0.0	0.0	0.0	0.0	0.0
36	17	0.0	0.0	0.0	0.0	0.0	0.0
36	18	0.0	0.0	0.0	0.0	0.0	0.0
36	19	0.0	0.0	0.0	0.0	0.0	0.0
36	20	0.0	0.0	0.0	0.0	0.0	0.0
36	21	0.0	0.0	0.0	0.0	0.0	0.0
36	22	0.0	0.0	0.0	0.0	0.0	0.0
36	23	0.0	0.0	0.0	0.0	0.0	0.0
36	24	0.0	0.0	0.0	0.0	0.0	0.0
36	25	0.0	0.0	0.0	0.0	0.0	0.0
36	26	0.0	0.0	0.0	0.0	0.0	0.0
36	27	0.0	0.0	0.0	0.0	0.0	0.0
36	28	0.0	0.0	0.0	0.0	0.0	0.0
36	29	0.0	0.0	0.0	0.0	0.0	0.0
36	30	0.0	0.0	0.0	0.0	0.0	0.0
36	31	0.0	0.0	0.0	0.0	0.0	0.0
36	32	0.0	0.0	0.0	0.0	0.0	0.0
36	33	0.0	0.0	0.0	0.0	0.0	0.0
36	34	0.0	0.0	0.0	0.0	0.0	0.0
36	35	0.0	0.0	0.0	0.0	0.0	0.0
36	36	0.0	0.0	0.0	0.0	0.0	0.0
36	37	0.0	0.0	0.0	0.0	0.0	0.0
36	38	0.0	0.0	0.0	0.0	0.0	0.0
36	39	0.0	0.0	0.0	0.0	0.0	0.0
36	40	0.0	0.0	0.0	0.0	0.0	0.0
36	41	0.0	0.0	0.0	0.0	0.0	0.0
36	42	0.0	0.0	0.0	0.0	0.0	0.0
36	43	0.0	0.0	0.0	0.0	0.0	0.0
36	44	0.0	0.0	0.0	0.0	0.0	0.0
36	45	0.0	0.0	0.0	0.0	0.0	0.0
36	46	0.0	0.0	0.0	0.0	0.0	0.0
36	47	0.0	0.0	0.0	0.0	0.0	0.0
36	48	0.0	0.0	0.0	0.0	0.0	0.0
36	49	0.0	0.0	0.0	0.0	0.0	0.0
36	50	0.0	0.0	0.0	0.0	0.0	0.0
37	1	0.0	0.0	0.0	0.0	0.0	0.0
37	2	0.0	0.0	0.0	0.0	0.0	0.0
37	3	0.0	0.0	0.0	0.0	0.0	0.0
37	4	0.0	0.0	0.0	0.0	0.0	0.0
37	5	0.0	0.0	0.0	0.0	0.0	0.0
37	6	0.0	0.0	0.0	0.0	0.0	0.0
37	7	0.0	0.0	0.0	0.0	0.0	0.0
37	8	0.0	0.0	0.0	0.0	0.0	0.0
37	9	0.0	0.0	0.0	0.0	0.0	0.0
37	10	0.0	0.0	0.0	0.0	0.0	0.0
37	11	0.0	0.0	0.0	0.0	0.0	0.0
37	12	0.0	0.0	0.0	0.0	0.0	0.0
37	13	0.0	0.0	0.0	0.0	0.0	0.0
37	14	0.0	0.0	0.0	0.0	0.0	0.0
37	15	0.0	0.0	0.0	0.0	0.0	0.0
37	16	0.0	0.0	0.0	0.0	0.0	0.0
37	17	0.0	0.0	0.0	0.0	0.0	0.0
37	18	0.0	0.0	0.0	0.0	0.0	0.0
37	19	0.0	0.0	0.0	0.0	0.0	0.0
37	20	0.0	0.0	0.0	0.0	0.0	0.0
37	21	0.0	0.0	0.0	0.0	0.0	0.0
37	22	0.0	0.0	0.0	0.0	0.0	0.0
37	23	0.0	0.0	0.0	0.0	0.0	0.0
37	24	0.0	0.0	0.0	0.0	0.0	0.0
37	25	0.0	0.0	0.0	0.0	0.0	0.0
37	26	0.0	0.0	0.0	0.0	0.0	0.0
37	27	0.0	0.0	0.0	0.0	0.0	0.0

37	28	0.0	0.0	0.0	0.0	0.0	0.0
37	29	0.0	0.0	0.0	0.0	0.0	0.0
37	30	0.0	0.0	0.0	0.0	0.0	0.0
37	31	0.0	0.0	0.0	0.0	0.0	0.0
37	32	0.0	0.0	0.0	0.0	0.0	0.0
37	33	0.0	0.0	0.0	0.0	0.0	0.0
37	34	0.0	0.0	0.0	0.0	0.0	0.0
37	35	0.0	0.0	0.0	0.0	0.0	0.0
37	36	0.0	0.0	0.0	0.0	0.0	0.0
37	37	0.0	0.0	0.0	0.0	0.0	0.0
37	38	0.0	0.0	0.0	0.0	0.0	0.0
37	39	0.0	0.0	0.0	0.0	0.0	0.0
37	40	0.0	0.0	0.0	0.0	0.0	0.0
37	41	0.0	0.0	0.0	0.0	0.0	0.0
37	42	0.0	0.0	0.0	0.0	0.0	0.0
37	43	0.0	0.0	0.0	0.0	0.0	0.0
37	44	0.0	0.0	0.0	0.0	0.0	0.0
37	45	0.0	0.0	0.0	0.0	0.0	0.0
37	46	0.0	0.0	0.0	0.0	0.0	0.0
37	47	0.0	0.0	0.0	0.0	0.0	0.0
37	48	0.0	0.0	0.0	0.0	0.0	0.0
37	49	0.0	0.0	0.0	0.0	0.0	0.0
37	50	0.0	0.0	0.0	0.0	0.0	0.0
38	1	0.0	0.0	0.0	0.0	0.0	0.0
38	2	0.0	0.0	0.0	0.0	0.0	0.0
38	3	0.0	0.0	0.0	0.0	0.0	0.0
38	4	0.0	0.0	0.0	0.0	0.0	0.0
38	5	0.0	0.0	0.0	0.0	0.0	0.0
38	6	0.0	0.0	0.0	0.0	0.0	0.0
38	7	0.0	0.0	0.0	0.0	0.0	0.0
38	8	0.0	0.0	0.0	0.0	0.0	0.0
38	9	0.0	0.0	0.0	0.0	0.0	0.0
38	10	0.0	0.0	0.0	0.0	0.0	0.0
38	11	0.0	0.0	0.0	0.0	0.0	0.0
38	12	0.0	0.0	0.0	0.0	0.0	0.0
38	13	0.0	0.0	0.0	0.0	0.0	0.0
38	14	0.0	0.0	0.0	0.0	0.0	0.0
38	15	0.0	0.0	0.0	0.0	0.0	0.0
38	16	0.0	0.0	0.0	0.0	0.0	0.0
38	17	0.0	0.0	0.0	0.0	0.0	0.0
38	18	0.0	0.0	0.0	0.0	0.0	0.0
38	19	0.0	0.0	0.0	0.0	0.0	0.0
38	20	0.0	0.0	0.0	0.0	0.0	0.0
38	21	0.0	0.0	0.0	0.0	0.0	0.0
38	22	0.0	0.0	0.0	0.0	0.0	0.0
38	23	0.0	0.0	0.0	0.0	0.0	0.0
38	24	0.0	0.0	0.0	0.0	0.0	0.0
38	25	0.0	0.0	0.0	0.0	0.0	0.0
38	26	0.0	0.0	0.0	0.0	0.0	0.0
38	27	0.0	0.0	0.0	0.0	0.0	0.0
38	28	0.0	0.0	0.0	0.0	0.0	0.0
38	29	0.0	0.0	0.0	0.0	0.0	0.0
38	30	0.0	0.0	0.0	0.0	0.0	0.0
38	31	0.0	0.0	0.0	0.0	0.0	0.0
38	32	0.0	0.0	0.0	0.0	0.0	0.0
38	33	0.0	0.0	0.0	0.0	0.0	0.0
38	34	0.0	0.0	0.0	0.0	0.0	0.0
38	35	0.0	0.0	0.0	0.0	0.0	0.0
38	36	0.0	0.0	0.0	0.0	0.0	0.0
38	37	0.0	0.0	0.0	0.0	0.0	0.0
38	38	0.0	0.0	0.0	0.0	0.0	0.0
38	39	0.0	0.0	0.0	0.0	0.0	0.0
38	40	0.0	0.0	0.0	0.0	0.0	0.0
38	41	0.0	0.0	0.0	0.0	0.0	0.0
38	42	0.0	0.0	0.0	0.0	0.0	0.0
38	43	0.0	0.0	0.0	0.0	0.0	0.0
38	44	0.0	0.0	0.0	0.0	0.0	0.0
38	45	0.0	0.0	0.0	0.0	0.0	0.0
38	46	0.0	0.0	0.0	0.0	0.0	0.0
38	47	0.0	0.0	0.0	0.0	0.0	0.0
38	48	0.0	0.0	0.0	0.0	0.0	0.0
38	49	0.0	0.0	0.0	0.0	0.0	0.0
38	50	0.0	0.0	0.0	0.0	0.0	0.0
39	1	0.0	0.0	0.0	0.0	0.0	0.0
39	2	0.0	0.0	0.0	0.0	0.0	0.0
39	3	0.0	0.0	0.0	0.0	0.0	0.0
39	4	0.0	0.0	0.0	0.0	0.0	0.0

39	5	0.0	0.0	0.0	0.0	0.0	0.0
39	6	0.0	0.0	0.0	0.0	0.0	0.0
39	7	0.0	0.0	0.0	0.0	0.0	0.0
39	8	0.0	0.0	0.0	0.0	0.0	0.0
39	9	0.0	0.0	0.0	0.0	0.0	0.0
39	10	0.0	0.0	0.0	0.0	0.0	0.0
39	11	0.0	0.0	0.0	0.0	0.0	0.0
39	12	0.0	0.0	0.0	0.0	0.0	0.0
39	13	0.0	0.0	0.0	0.0	0.0	0.0
39	14	0.0	0.0	0.0	0.0	0.0	0.0
39	15	0.0	0.0	0.0	0.0	0.0	0.0
39	16	0.0	0.0	0.0	0.0	0.0	0.0
39	17	0.0	0.0	0.0	0.0	0.0	0.0
39	18	0.0	0.0	0.0	0.0	0.0	0.0
39	19	0.0	0.0	0.0	0.0	0.0	0.0
39	20	0.0	0.0	0.0	0.0	0.0	0.0
39	21	0.0	0.0	0.0	0.0	0.0	0.0
39	22	0.0	0.0	0.0	0.0	0.0	0.0
39	23	0.0	0.0	0.0	0.0	0.0	0.0
39	24	0.0	0.0	0.0	0.0	0.0	0.0
39	25	0.0	0.0	0.0	0.0	0.0	0.0
39	26	0.0	0.0	0.0	0.0	0.0	0.0
39	27	0.0	0.0	0.0	0.0	0.0	0.0
39	28	0.0	0.0	0.0	0.0	0.0	0.0
39	29	0.0	0.0	0.0	0.0	0.0	0.0
39	30	0.0	0.0	0.0	0.0	0.0	0.0
39	31	0.0	0.0	0.0	0.0	0.0	0.0
39	32	0.0	0.0	0.0	0.0	0.0	0.0
39	33	0.0	0.0	0.0	0.0	0.0	0.0
39	34	0.0	0.0	0.0	0.0	0.0	0.0
39	35	0.0	0.0	0.0	0.0	0.0	0.0
39	36	0.0	0.0	0.0	0.0	0.0	0.0
39	37	0.0	0.0	0.0	0.0	0.0	0.0
39	38	0.0	0.0	0.0	0.0	0.0	0.0
39	39	0.0	0.0	0.0	0.0	0.0	0.0
39	40	0.0	0.0	0.0	0.0	0.0	0.0
39	41	0.0	0.0	0.0	0.0	0.0	0.0
39	42	0.0	0.0	0.0	0.0	0.0	0.0
39	43	0.0	0.0	0.0	0.0	0.0	0.0
39	44	0.0	0.0	0.0	0.0	0.0	0.0
39	45	0.0	0.0	0.0	0.0	0.0	0.0
39	46	0.0	0.0	0.0	0.0	0.0	0.0
39	47	0.0	0.0	0.0	0.0	0.0	0.0
39	48	0.0	0.0	0.0	0.0	0.0	0.0
39	49	0.0	0.0	0.0	0.0	0.0	0.0
39	50	0.0	0.0	0.0	0.0	0.0	0.0
40	1	0.02	0.03	-0.02	-6.44e-05	1.06e-04	-4.80e-05
40	2	0.02	0.03	-0.02	-6.48e-05	1.06e-04	-4.82e-05
40	3	0.03	0.03	-0.02	-7.50e-05	1.09e-04	-6.30e-05
40	4	0.03	0.03	-0.02	-7.54e-05	1.09e-04	-6.32e-05
40	5	0.01	0.02	-0.01	-4.70e-05	7.34e-05	-3.46e-05
40	6	0.02	0.02	-0.01	-4.74e-05	7.36e-05	-3.49e-05
40	7	0.02	0.02	-0.02	-5.76e-05	7.62e-05	-4.96e-05
40	8	0.02	0.02	-0.02	-5.79e-05	7.64e-05	-4.99e-05
40	9	0.02	0.03	-0.02	-6.52e-05	1.06e-04	-4.84e-05
40	10	0.03	0.03	-0.02	-7.18e-05	1.08e-04	-5.85e-05
40	11	0.03	0.03	-0.02	-7.26e-05	1.08e-04	-5.89e-05
40	12	0.02	0.02	-0.01	-4.78e-05	7.38e-05	-3.51e-05
40	13	0.02	0.02	-0.02	-5.44e-05	7.54e-05	-4.51e-05
40	14	0.02	0.02	-0.02	-5.52e-05	7.58e-05	-4.56e-05
40	15	0.34	0.07	-0.03	-1.79e-04	7.53e-04	-4.40e-04
40	16	0.29	-4.01e-03	-0.03	-3.24e-06	6.79e-04	-3.11e-04
40	17	-0.26	0.05	-3.45e-03	-9.92e-05	-5.30e-04	2.29e-04
40	18	-0.30	-0.03	7.51e-04	7.64e-05	-6.04e-04	3.59e-04
40	19	0.33	0.09	-0.03	-1.97e-04	6.90e-04	-4.46e-04
40	20	0.30	-0.02	-0.03	1.47e-05	7.42e-04	-3.04e-04
40	21	-0.27	0.06	-2.94e-03	-1.17e-04	-5.93e-04	2.23e-04
40	22	-0.29	-0.04	2.43e-04	9.43e-05	-5.41e-04	3.65e-04
40	23	0.30	0.09	-0.03	-2.42e-04	6.77e-04	-4.71e-04
40	24	0.26	8.56e-03	-0.03	-6.68e-05	6.03e-04	-3.42e-04
40	25	-0.22	0.03	-3.61e-03	-3.56e-05	-4.54e-04	2.61e-04
40	26	-0.27	-0.04	5.91e-04	1.40e-04	-5.28e-04	3.90e-04
40	27	0.29	0.10	-0.03	-2.60e-04	6.14e-04	-4.78e-04
40	28	0.27	-3.97e-03	-0.03	-4.88e-05	6.66e-04	-3.36e-04
40	29	-0.23	0.05	-3.10e-03	-5.36e-05	-5.17e-04	2.55e-04
40	30	-0.26	-0.06	8.26e-05	1.58e-04	-4.65e-04	3.96e-04
40	31	0.18	0.16	-0.03	-3.56e-04	3.90e-04	-3.57e-04

40	32	0.04	-0.10	-0.01	2.29e-04	1.44e-04	7.45e-05
40	33	-1.42e-03	0.15	-0.02	-3.32e-04	5.28e-06	-1.56e-04
40	34	-0.14	-0.11	-4.26e-03	2.53e-04	-2.41e-04	2.75e-04
40	35	0.17	0.16	-0.03	-3.75e-04	3.67e-04	-3.66e-04
40	36	0.03	-0.10	-0.01	2.10e-04	1.21e-04	6.51e-05
40	37	8.55e-03	0.14	-0.02	-3.13e-04	2.80e-05	-1.46e-04
40	38	-0.13	-0.12	-4.31e-03	2.72e-04	-2.18e-04	2.85e-04
40	39	0.14	0.20	-0.03	-4.16e-04	1.80e-04	-3.77e-04
40	40	0.07	-0.15	-0.01	2.89e-04	3.54e-04	9.54e-05
40	41	-0.03	0.19	-0.02	-3.92e-04	-2.05e-04	-1.77e-04
40	42	-0.11	-0.15	-5.96e-03	3.13e-04	-3.06e-05	2.96e-04
40	43	0.13	0.20	-0.03	-4.35e-04	1.57e-04	-3.87e-04
40	44	0.06	-0.14	-0.01	2.70e-04	3.32e-04	8.59e-05
40	45	-0.02	0.18	-0.02	-3.73e-04	-1.83e-04	-1.67e-04
40	46	-0.10	-0.16	-6.00e-03	3.32e-04	-7.88e-06	3.06e-04
40	47	-0.41	-8.02e-03	5.80e-03	6.55e-05	-8.32e-04	4.66e-04
40	48	0.44	0.05	-0.04	-1.68e-04	9.81e-04	-5.48e-04
40	49	-0.04	-0.22	-5.91e-03	4.59e-04	1.29e-04	3.14e-04
40	50	0.08	0.26	-0.03	-5.62e-04	2.03e-05	-3.95e-04
41	1	0.02	0.03	-0.02	-6.36e-05	9.63e-05	-4.84e-05
41	2	0.02	0.03	-0.02	-6.40e-05	9.65e-05	-4.86e-05
41	3	0.03	0.03	-0.02	-7.38e-05	9.95e-05	-6.25e-05
41	4	0.03	0.03	-0.02	-7.42e-05	9.97e-05	-6.27e-05
41	5	0.02	0.02	-0.01	-4.64e-05	6.66e-05	-3.50e-05
41	6	0.02	0.02	-0.01	-4.68e-05	6.68e-05	-3.52e-05
41	7	0.02	0.03	-0.02	-5.66e-05	6.97e-05	-4.91e-05
41	8	0.02	0.03	-0.02	-5.70e-05	6.99e-05	-4.93e-05
41	9	0.02	0.03	-0.02	-6.45e-05	9.67e-05	-4.88e-05
41	10	0.03	0.03	-0.02	-7.07e-05	9.85e-05	-5.82e-05
41	11	0.03	0.03	-0.02	-7.16e-05	9.89e-05	-5.86e-05
41	12	0.02	0.02	-0.01	-4.72e-05	6.70e-05	-3.54e-05
41	13	0.02	0.02	-0.02	-5.35e-05	6.88e-05	-4.49e-05
41	14	0.02	0.02	-0.02	-5.43e-05	6.92e-05	-4.53e-05
41	15	0.34	0.06	-0.03	-1.80e-04	7.59e-04	-4.39e-04
41	16	0.29	-0.05	-0.03	3.29e-05	6.81e-04	-2.82e-04
41	17	-0.25	0.09	-2.32e-03	-1.34e-04	-5.45e-04	2.01e-04
41	18	-0.30	-0.01	2.61e-03	7.93e-05	-6.23e-04	3.57e-04
41	19	0.32	0.05	-0.03	-1.66e-04	6.93e-04	-4.18e-04
41	20	0.30	-0.04	-0.03	1.83e-05	7.46e-04	-3.03e-04
41	21	-0.26	0.08	-1.27e-03	-1.19e-04	-6.11e-04	2.21e-04
41	22	-0.28	-1.73e-03	1.56e-03	6.47e-05	-5.57e-04	3.37e-04
41	23	0.29	0.03	-0.03	-7.53e-05	6.75e-04	-4.06e-04
41	24	0.25	-0.07	-0.02	1.38e-04	5.97e-04	-2.49e-04
41	25	-0.21	0.11	-5.78e-03	-2.39e-04	-4.61e-04	1.68e-04
41	26	-0.25	0.01	-8.48e-04	-2.57e-05	-5.39e-04	3.24e-04
41	27	0.28	0.02	-0.03	-6.07e-05	6.09e-04	-3.85e-04
41	28	0.26	-0.06	-0.03	1.23e-04	6.63e-04	-2.70e-04
41	29	-0.22	0.10	-4.73e-03	-2.24e-04	-5.27e-04	1.88e-04
41	30	-0.24	0.02	-1.90e-03	-4.03e-05	-4.74e-04	3.04e-04
41	31	0.18	0.19	-0.03	-4.13e-04	3.93e-04	-3.97e-04
41	32	0.03	-0.16	-0.01	2.98e-04	1.34e-04	1.24e-04
41	33	8.80e-03	0.20	-0.02	-3.99e-04	2.15e-06	-2.06e-04
41	34	-0.15	-0.14	-2.16e-03	3.12e-04	-2.58e-04	3.16e-04
41	35	0.17	0.18	-0.03	-3.81e-04	3.68e-04	-3.88e-04
41	36	0.02	-0.16	-0.01	3.29e-04	1.08e-04	1.34e-04
41	37	0.02	0.21	-0.02	-4.30e-04	2.73e-05	-2.15e-04
41	38	-0.13	-0.14	-3.20e-03	2.80e-04	-2.32e-04	3.06e-04
41	39	0.14	0.16	-0.02	-3.64e-04	1.74e-04	-3.29e-04
41	40	0.07	-0.12	-0.01	2.49e-04	3.52e-04	5.63e-05
41	41	-0.03	0.17	-0.02	-3.50e-04	-2.17e-04	-1.38e-04
41	42	-0.10	-0.11	-5.68e-03	2.63e-04	-3.87e-05	2.48e-04
41	43	0.13	0.15	-0.02	-3.33e-04	1.49e-04	-3.20e-04
41	44	0.06	-0.13	-0.01	2.81e-04	3.27e-04	6.61e-05
41	45	-0.02	0.17	-0.02	-3.82e-04	-1.92e-04	-1.47e-04
41	46	-0.09	-0.10	-6.72e-03	2.32e-04	-1.36e-05	2.38e-04
41	47	-0.39	0.07	4.83e-03	-1.24e-04	-8.51e-04	3.76e-04
41	48	0.43	-0.02	-0.03	2.34e-05	9.86e-04	-4.58e-04
41	49	-0.04	-0.23	-4.95e-03	4.79e-04	1.23e-04	3.20e-04
41	50	0.08	0.27	-0.02	-5.80e-04	1.26e-05	-4.01e-04
42	1	-8.58e-03	0.03	-0.01	-6.82e-06	-8.96e-05	3.98e-05
42	2	-8.37e-03	0.03	-0.01	-7.46e-06	-8.91e-05	4.00e-05
42	3	-0.01	0.04	-0.02	-3.28e-05	-9.80e-05	6.09e-05
42	4	-0.01	0.04	-0.02	-3.35e-05	-9.74e-05	6.11e-05
42	5	-4.73e-03	0.02	-9.67e-03	-6.76e-06	-5.76e-05	2.62e-05
42	6	-4.52e-03	0.02	-9.64e-03	-7.40e-06	-5.70e-05	2.64e-05
42	7	-0.01	0.03	-0.01	-3.28e-05	-6.59e-05	4.73e-05
42	8	-0.01	0.03	-0.01	-3.34e-05	-6.53e-05	4.75e-05

42	9	-8.16e-03	0.03	-0.01	-8.11e-06	-8.85e-05	4.03e-05
42	10	-0.01	0.03	-0.01	-2.50e-05	-9.55e-05	5.46e-05
42	11	-0.01	0.03	-0.01	-2.63e-05	-9.43e-05	5.50e-05
42	12	-4.30e-03	0.02	-9.61e-03	-8.04e-06	-5.64e-05	2.66e-05
42	13	-8.93e-03	0.03	-0.01	-2.50e-05	-6.34e-05	4.09e-05
42	14	-8.50e-03	0.03	-0.01	-2.62e-05	-6.22e-05	4.14e-05
42	15	0.22	0.06	3.13e-03	-6.66e-05	4.74e-04	-1.86e-04
42	16	0.24	-0.05	-1.07e-03	7.93e-05	4.29e-04	-1.62e-04
42	17	-0.26	0.10	-0.02	-1.14e-04	-5.51e-04	2.32e-04
42	18	-0.24	-9.11e-03	-0.02	3.23e-05	-5.96e-04	2.56e-04
42	19	0.24	0.05	2.29e-03	-5.10e-05	4.73e-04	-1.62e-04
42	20	0.22	-0.04	-2.23e-04	6.37e-05	4.31e-04	-1.86e-04
42	21	-0.24	0.09	-0.02	-9.80e-05	-5.53e-04	2.56e-04
42	22	-0.26	3.33e-03	-0.02	1.67e-05	-5.95e-04	2.32e-04
42	23	0.21	0.02	1.88e-03	-1.53e-05	4.50e-04	-2.37e-04
42	24	0.23	-0.09	-2.33e-03	1.31e-04	4.04e-04	-2.13e-04
42	25	-0.24	0.14	-0.02	-1.65e-04	-5.26e-04	2.82e-04
42	26	-0.22	0.03	-0.02	-1.90e-05	-5.71e-04	3.06e-04
42	27	0.23	6.92e-03	1.03e-03	0.0	4.48e-04	-2.13e-04
42	28	0.21	-0.08	-1.48e-03	1.15e-04	4.06e-04	-2.37e-04
42	29	-0.22	0.13	-0.02	-1.49e-04	-5.28e-04	3.06e-04
42	30	-0.24	0.04	-0.02	-3.46e-05	-5.70e-04	2.82e-04
42	31	0.03	0.20	9.65e-05	-2.53e-04	1.68e-04	-6.82e-05
42	32	0.10	-0.17	-0.01	2.33e-04	1.77e-05	1.20e-05
42	33	-0.11	0.22	-6.71e-03	-2.67e-04	-1.39e-04	5.72e-05
42	34	-0.05	-0.15	-0.02	2.19e-04	-2.90e-04	1.37e-04
42	35	0.03	0.19	-2.81e-04	-2.38e-04	1.61e-04	-8.34e-05
42	36	0.09	-0.18	-0.01	2.48e-04	1.02e-05	-3.13e-06
42	37	-0.11	0.23	-6.33e-03	-2.83e-04	-1.32e-04	7.23e-05
42	38	-0.04	-0.14	-0.02	2.04e-04	-2.82e-04	1.53e-04
42	39	0.10	0.16	-2.72e-03	-2.01e-04	1.63e-04	1.17e-05
42	40	0.03	-0.13	-0.01	1.81e-04	2.32e-05	-6.79e-05
42	41	-0.05	0.17	-9.53e-03	-2.15e-04	-1.45e-04	1.37e-04
42	42	-0.11	-0.11	-0.02	1.67e-04	-2.84e-04	5.74e-05
42	43	0.09	0.15	-3.10e-03	-1.86e-04	1.55e-04	-3.43e-06
42	44	0.03	-0.14	-0.01	1.96e-04	1.57e-05	-8.31e-05
42	45	-0.04	0.19	-9.15e-03	-2.31e-04	-1.38e-04	1.52e-04
42	46	-0.11	-0.10	-0.02	1.52e-04	-2.77e-04	7.26e-05
42	47	-0.35	0.09	-0.03	-9.87e-05	-7.95e-04	3.40e-04
42	48	0.33	-0.04	4.98e-03	6.43e-05	6.73e-04	-2.71e-04
42	49	0.01	-0.24	-0.02	3.29e-04	-9.94e-05	0.0
42	50	-0.03	0.29	-1.63e-03	-3.64e-04	-2.24e-05	6.82e-05
43	1	0.04	0.03	-0.03	4.85e-04	1.73e-04	2.08e-04
43	2	0.04	0.03	-0.03	4.85e-04	1.73e-04	2.08e-04
43	3	0.04	0.04	-0.03	4.85e-04	1.74e-04	2.08e-04
43	4	0.04	0.04	-0.03	4.85e-04	1.74e-04	2.08e-04
43	5	0.03	0.03	-0.02	3.46e-04	1.19e-04	1.48e-04
43	6	0.03	0.03	-0.02	3.46e-04	1.19e-04	1.48e-04
43	7	0.03	0.03	-0.02	3.46e-04	1.21e-04	1.48e-04
43	8	0.03	0.03	-0.02	3.46e-04	1.21e-04	1.48e-04
43	9	0.04	0.03	-0.03	4.85e-04	1.73e-04	2.08e-04
43	10	0.04	0.04	-0.03	4.85e-04	1.74e-04	2.08e-04
43	11	0.04	0.04	-0.03	4.85e-04	1.74e-04	2.08e-04
43	12	0.03	0.03	-0.02	3.46e-04	1.19e-04	1.48e-04
43	13	0.03	0.03	-0.02	3.46e-04	1.20e-04	1.48e-04
43	14	0.03	0.03	-0.02	3.46e-04	1.20e-04	1.48e-04
43	15	0.32	0.10	-0.03	3.05e-04	3.65e-04	1.24e-04
43	16	0.34	-0.06	-0.03	3.51e-04	3.92e-04	8.94e-05
43	17	-0.29	0.11	-0.01	3.41e-04	-1.52e-04	2.07e-04
43	18	-0.26	-0.04	-0.02	3.87e-04	-1.25e-04	1.72e-04
43	19	0.34	0.09	-0.03	3.08e-04	3.87e-04	9.65e-05
43	20	0.32	-0.05	-0.03	3.49e-04	3.69e-04	1.17e-04
43	21	-0.27	0.11	-0.02	3.43e-04	-1.29e-04	1.79e-04
43	22	-0.28	-0.04	-0.02	3.84e-04	-1.47e-04	2.00e-04
43	23	0.33	0.07	-0.03	3.14e-04	3.33e-04	6.10e-05
43	24	0.36	-0.08	-0.03	3.60e-04	3.60e-04	2.65e-05
43	25	-0.30	0.14	-0.02	3.32e-04	-1.20e-04	2.70e-04
43	26	-0.28	-0.02	-0.02	3.78e-04	-9.27e-05	2.35e-04
43	27	0.35	0.07	-0.03	3.16e-04	3.55e-04	3.36e-05
43	28	0.34	-0.08	-0.03	3.58e-04	3.37e-04	5.39e-05
43	29	-0.28	0.13	-0.02	3.34e-04	-9.75e-05	2.42e-04
43	30	-0.30	-0.01	-0.02	3.76e-04	-1.15e-04	2.62e-04
43	31	0.08	0.29	-0.02	2.64e-04	1.52e-04	1.93e-04
43	32	0.16	-0.24	-0.03	4.17e-04	2.43e-04	7.81e-05
43	33	-0.10	0.29	-0.02	2.75e-04	-3.03e-06	2.18e-04
43	34	-0.02	-0.23	-0.02	4.28e-04	8.79e-05	1.03e-04
43	35	0.09	0.28	-0.02	2.67e-04	1.42e-04	1.74e-04

43	36	0.16	-0.24	-0.03	4.20e-04	2.33e-04	5.92e-05
43	37	-0.10	0.30	-0.02	2.72e-04	6.58e-06	2.37e-04
43	38	-0.03	-0.22	-0.02	4.25e-04	9.75e-05	1.22e-04
43	39	0.15	0.27	-0.02	2.71e-04	2.27e-04	1.02e-04
43	40	0.09	-0.22	-0.03	4.10e-04	1.68e-04	1.69e-04
43	41	-0.03	0.27	-0.02	2.82e-04	7.20e-05	1.27e-04
43	42	-0.09	-0.21	-0.02	4.21e-04	1.28e-05	1.94e-04
43	43	0.16	0.26	-0.02	2.74e-04	2.17e-04	8.29e-05
43	44	0.09	-0.22	-0.03	4.13e-04	1.58e-04	1.51e-04
43	45	-0.03	0.28	-0.02	2.79e-04	8.16e-05	1.45e-04
43	46	-0.10	-0.20	-0.02	4.18e-04	2.24e-05	2.13e-04
43	47	-0.46	0.06	-0.01	3.63e-04	-2.40e-04	2.68e-04
43	48	0.52	-2.71e-03	-0.03	3.29e-04	4.80e-04	2.81e-05
43	49	0.04	-0.37	-0.02	4.63e-04	1.39e-04	1.27e-04
43	50	0.02	0.43	-0.02	2.29e-04	1.01e-04	1.70e-04
44	1	0.0	0.0	0.0	0.0	0.0	0.0
44	2	0.0	0.0	0.0	0.0	0.0	0.0
44	3	0.0	0.0	0.0	0.0	0.0	0.0
44	4	0.0	0.0	0.0	0.0	0.0	0.0
44	5	0.0	0.0	0.0	0.0	0.0	0.0
44	6	0.0	0.0	0.0	0.0	0.0	0.0
44	7	0.0	0.0	0.0	0.0	0.0	0.0
44	8	0.0	0.0	0.0	0.0	0.0	0.0
44	9	0.0	0.0	0.0	0.0	0.0	0.0
44	10	0.0	0.0	0.0	0.0	0.0	0.0
44	11	0.0	0.0	0.0	0.0	0.0	0.0
44	12	0.0	0.0	0.0	0.0	0.0	0.0
44	13	0.0	0.0	0.0	0.0	0.0	0.0
44	14	0.0	0.0	0.0	0.0	0.0	0.0
44	15	0.0	0.0	0.0	0.0	0.0	0.0
44	16	0.0	0.0	0.0	0.0	0.0	0.0
44	17	0.0	0.0	0.0	0.0	0.0	0.0
44	18	0.0	0.0	0.0	0.0	0.0	0.0
44	19	0.0	0.0	0.0	0.0	0.0	0.0
44	20	0.0	0.0	0.0	0.0	0.0	0.0
44	21	0.0	0.0	0.0	0.0	0.0	0.0
44	22	0.0	0.0	0.0	0.0	0.0	0.0
44	23	0.0	0.0	0.0	0.0	0.0	0.0
44	24	0.0	0.0	0.0	0.0	0.0	0.0
44	25	0.0	0.0	0.0	0.0	0.0	0.0
44	26	0.0	0.0	0.0	0.0	0.0	0.0
44	27	0.0	0.0	0.0	0.0	0.0	0.0
44	28	0.0	0.0	0.0	0.0	0.0	0.0
44	29	0.0	0.0	0.0	0.0	0.0	0.0
44	30	0.0	0.0	0.0	0.0	0.0	0.0
44	31	0.0	0.0	0.0	0.0	0.0	0.0
44	32	0.0	0.0	0.0	0.0	0.0	0.0
44	33	0.0	0.0	0.0	0.0	0.0	0.0
44	34	0.0	0.0	0.0	0.0	0.0	0.0
44	35	0.0	0.0	0.0	0.0	0.0	0.0
44	36	0.0	0.0	0.0	0.0	0.0	0.0
44	37	0.0	0.0	0.0	0.0	0.0	0.0
44	38	0.0	0.0	0.0	0.0	0.0	0.0
44	39	0.0	0.0	0.0	0.0	0.0	0.0
44	40	0.0	0.0	0.0	0.0	0.0	0.0
44	41	0.0	0.0	0.0	0.0	0.0	0.0
44	42	0.0	0.0	0.0	0.0	0.0	0.0
44	43	0.0	0.0	0.0	0.0	0.0	0.0
44	44	0.0	0.0	0.0	0.0	0.0	0.0
44	45	0.0	0.0	0.0	0.0	0.0	0.0
44	46	0.0	0.0	0.0	0.0	0.0	0.0
44	47	0.0	0.0	0.0	0.0	0.0	0.0
44	48	0.0	0.0	0.0	0.0	0.0	0.0
44	49	0.0	0.0	0.0	0.0	0.0	0.0
44	50	0.0	0.0	0.0	0.0	0.0	0.0
45	1	0.0	0.0	0.0	0.0	0.0	0.0
45	2	0.0	0.0	0.0	0.0	0.0	0.0
45	3	0.0	0.0	0.0	0.0	0.0	0.0
45	4	0.0	0.0	0.0	0.0	0.0	0.0
45	5	0.0	0.0	0.0	0.0	0.0	0.0
45	6	0.0	0.0	0.0	0.0	0.0	0.0
45	7	0.0	0.0	0.0	0.0	0.0	0.0
45	8	0.0	0.0	0.0	0.0	0.0	0.0
45	9	0.0	0.0	0.0	0.0	0.0	0.0
45	10	0.0	0.0	0.0	0.0	0.0	0.0
45	11	0.0	0.0	0.0	0.0	0.0	0.0
45	12	0.0	0.0	0.0	0.0	0.0	0.0

45	13	0.0	0.0	0.0	0.0	0.0	0.0
45	14	0.0	0.0	0.0	0.0	0.0	0.0
45	15	0.0	0.0	0.0	0.0	0.0	0.0
45	16	0.0	0.0	0.0	0.0	0.0	0.0
45	17	0.0	0.0	0.0	0.0	0.0	0.0
45	18	0.0	0.0	0.0	0.0	0.0	0.0
45	19	0.0	0.0	0.0	0.0	0.0	0.0
45	20	0.0	0.0	0.0	0.0	0.0	0.0
45	21	0.0	0.0	0.0	0.0	0.0	0.0
45	22	0.0	0.0	0.0	0.0	0.0	0.0
45	23	0.0	0.0	0.0	0.0	0.0	0.0
45	24	0.0	0.0	0.0	0.0	0.0	0.0
45	25	0.0	0.0	0.0	0.0	0.0	0.0
45	26	0.0	0.0	0.0	0.0	0.0	0.0
45	27	0.0	0.0	0.0	0.0	0.0	0.0
45	28	0.0	0.0	0.0	0.0	0.0	0.0
45	29	0.0	0.0	0.0	0.0	0.0	0.0
45	30	0.0	0.0	0.0	0.0	0.0	0.0
45	31	0.0	0.0	0.0	0.0	0.0	0.0
45	32	0.0	0.0	0.0	0.0	0.0	0.0
45	33	0.0	0.0	0.0	0.0	0.0	0.0
45	34	0.0	0.0	0.0	0.0	0.0	0.0
45	35	0.0	0.0	0.0	0.0	0.0	0.0
45	36	0.0	0.0	0.0	0.0	0.0	0.0
45	37	0.0	0.0	0.0	0.0	0.0	0.0
45	38	0.0	0.0	0.0	0.0	0.0	0.0
45	39	0.0	0.0	0.0	0.0	0.0	0.0
45	40	0.0	0.0	0.0	0.0	0.0	0.0
45	41	0.0	0.0	0.0	0.0	0.0	0.0
45	42	0.0	0.0	0.0	0.0	0.0	0.0
45	43	0.0	0.0	0.0	0.0	0.0	0.0
45	44	0.0	0.0	0.0	0.0	0.0	0.0
45	45	0.0	0.0	0.0	0.0	0.0	0.0
45	46	0.0	0.0	0.0	0.0	0.0	0.0
45	47	0.0	0.0	0.0	0.0	0.0	0.0
45	48	0.0	0.0	0.0	0.0	0.0	0.0
45	49	0.0	0.0	0.0	0.0	0.0	0.0
45	50	0.0	0.0	0.0	0.0	0.0	0.0
46	1	7.11e-05	8.34e-04	-3.40e-03	-1.01e-05	1.47e-05	2.75e-06
46	2	7.11e-05	8.28e-04	-3.40e-03	-1.00e-05	1.47e-05	2.73e-06
46	3	9.57e-05	1.81e-03	-3.79e-03	-2.01e-05	1.68e-05	7.25e-06
46	4	9.57e-05	1.81e-03	-3.79e-03	-2.00e-05	1.68e-05	7.23e-06
46	5	4.98e-05	5.73e-04	-2.51e-03	-6.82e-06	1.07e-05	1.85e-06
46	6	4.98e-05	5.68e-04	-2.51e-03	-6.79e-06	1.07e-05	1.83e-06
46	7	7.45e-05	1.55e-03	-2.90e-03	-1.68e-05	1.29e-05	6.35e-06
46	8	7.45e-05	1.55e-03	-2.91e-03	-1.68e-05	1.29e-05	6.33e-06
46	9	7.10e-05	8.23e-04	-3.40e-03	-1.00e-05	1.47e-05	2.70e-06
46	10	8.83e-05	1.52e-03	-3.67e-03	-1.71e-05	1.62e-05	5.90e-06
46	11	8.83e-05	1.51e-03	-3.67e-03	-1.70e-05	1.62e-05	5.85e-06
46	12	4.98e-05	5.63e-04	-2.51e-03	-6.75e-06	1.07e-05	1.80e-06
46	13	6.71e-05	1.26e-03	-2.79e-03	-1.38e-05	1.22e-05	5.00e-06
46	14	6.71e-05	1.25e-03	-2.79e-03	-1.37e-05	1.22e-05	4.95e-06
46	15	1.82e-04	1.50e-03	-2.69e-03	-1.80e-05	1.59e-05	1.61e-06
46	16	1.71e-04	-4.26e-03	-3.95e-03	4.74e-05	2.23e-05	-2.63e-05
46	17	-5.20e-05	6.19e-03	-1.39e-03	-6.90e-05	0.0	3.36e-05
46	18	-6.24e-05	4.30e-04	-2.65e-03	-3.61e-06	7.30e-06	5.70e-06
46	19	1.82e-04	8.51e-04	-2.82e-03	-1.07e-05	1.64e-05	-1.38e-06
46	20	1.72e-04	-3.61e-03	-3.82e-03	4.01e-05	2.18e-05	-2.33e-05
46	21	-5.21e-05	5.54e-03	-1.52e-03	-6.17e-05	1.36e-06	3.06e-05
46	22	-6.23e-05	1.08e-03	-2.51e-03	-1.09e-05	6.77e-06	8.69e-06
46	23	1.72e-04	-5.26e-04	-3.09e-03	4.50e-06	1.73e-05	-8.21e-06
46	24	1.62e-04	-6.28e-03	-4.35e-03	6.99e-05	2.38e-05	-3.61e-05
46	25	-4.24e-05	8.21e-03	-9.86e-04	-9.15e-05	0.0	4.34e-05
46	26	-5.29e-05	2.46e-03	-2.25e-03	-2.61e-05	5.81e-06	1.55e-05
46	27	1.72e-04	-1.18e-03	-3.23e-03	1.18e-05	1.79e-05	-1.12e-05
46	28	1.62e-04	-5.63e-03	-4.22e-03	6.26e-05	2.33e-05	-3.31e-05
46	29	-4.26e-05	7.56e-03	-1.12e-03	-8.42e-05	0.0	4.05e-05
46	30	-5.27e-05	3.11e-03	-2.11e-03	-3.35e-05	5.28e-06	1.85e-05
46	31	1.12e-04	9.86e-03	-7.62e-04	-1.12e-04	3.04e-06	4.54e-05
46	32	7.74e-05	-9.33e-03	-4.97e-03	1.06e-04	2.46e-05	-4.77e-05
46	33	4.21e-05	0.01	-3.71e-04	-1.27e-04	-1.47e-06	5.50e-05
46	34	7.22e-06	-7.93e-03	-4.58e-03	9.06e-05	2.01e-05	-3.81e-05
46	35	1.09e-04	9.25e-03	-8.83e-04	-1.05e-04	3.48e-06	4.25e-05
46	36	7.45e-05	-9.94e-03	-5.09e-03	1.13e-04	2.51e-05	-5.06e-05
46	37	4.49e-05	0.01	-2.51e-04	-1.34e-04	-1.92e-06	5.80e-05
46	38	1.01e-05	-7.32e-03	-4.46e-03	8.38e-05	1.97e-05	-3.52e-05
46	39	1.12e-04	7.69e-03	-1.21e-03	-8.78e-05	4.81e-06	3.54e-05

46	40	7.79e-05	-7.17e-03	-4.52e-03	8.14e-05	2.29e-05	-3.77e-05
46	41	4.16e-05	9.10e-03	-8.18e-04	-1.03e-04	0.0	4.50e-05
46	42	7.72e-06	-5.76e-03	-4.13e-03	6.61e-05	1.83e-05	-2.81e-05
46	43	1.09e-04	7.08e-03	-1.33e-03	-8.10e-05	5.26e-06	3.25e-05
46	44	7.50e-05	-7.77e-03	-4.64e-03	8.82e-05	2.33e-05	-4.07e-05
46	45	4.44e-05	9.70e-03	-6.97e-04	-1.10e-04	0.0	4.80e-05
46	46	1.06e-05	-5.15e-03	-4.01e-03	5.94e-05	1.79e-05	-2.52e-05
46	47	-9.97e-05	6.44e-03	-1.29e-03	-7.09e-05	-1.19e-06	3.68e-05
46	48	2.19e-04	-4.51e-03	-4.05e-03	4.93e-05	2.44e-05	-2.95e-05
46	49	4.94e-05	-0.01	-5.66e-03	1.43e-04	2.73e-05	-6.25e-05
46	50	7.00e-05	0.01	3.24e-04	-1.65e-04	-4.16e-06	6.98e-05
47	1	0.0	0.0	0.0	0.0	0.0	0.0
47	2	0.0	0.0	0.0	0.0	0.0	0.0
47	3	0.0	0.0	0.0	0.0	0.0	0.0
47	4	0.0	0.0	0.0	0.0	0.0	0.0
47	5	0.0	0.0	0.0	0.0	0.0	0.0
47	6	0.0	0.0	0.0	0.0	0.0	0.0
47	7	0.0	0.0	0.0	0.0	0.0	0.0
47	8	0.0	0.0	0.0	0.0	0.0	0.0
47	9	0.0	0.0	0.0	0.0	0.0	0.0
47	10	0.0	0.0	0.0	0.0	0.0	0.0
47	11	0.0	0.0	0.0	0.0	0.0	0.0
47	12	0.0	0.0	0.0	0.0	0.0	0.0
47	13	0.0	0.0	0.0	0.0	0.0	0.0
47	14	0.0	0.0	0.0	0.0	0.0	0.0
47	15	0.0	0.0	0.0	0.0	0.0	0.0
47	16	0.0	0.0	0.0	0.0	0.0	0.0
47	17	0.0	0.0	0.0	0.0	0.0	0.0
47	18	0.0	0.0	0.0	0.0	0.0	0.0
47	19	0.0	0.0	0.0	0.0	0.0	0.0
47	20	0.0	0.0	0.0	0.0	0.0	0.0
47	21	0.0	0.0	0.0	0.0	0.0	0.0
47	22	0.0	0.0	0.0	0.0	0.0	0.0
47	23	0.0	0.0	0.0	0.0	0.0	0.0
47	24	0.0	0.0	0.0	0.0	0.0	0.0
47	25	0.0	0.0	0.0	0.0	0.0	0.0
47	26	0.0	0.0	0.0	0.0	0.0	0.0
47	27	0.0	0.0	0.0	0.0	0.0	0.0
47	28	0.0	0.0	0.0	0.0	0.0	0.0
47	29	0.0	0.0	0.0	0.0	0.0	0.0
47	30	0.0	0.0	0.0	0.0	0.0	0.0
47	31	0.0	0.0	0.0	0.0	0.0	0.0
47	32	0.0	0.0	0.0	0.0	0.0	0.0
47	33	0.0	0.0	0.0	0.0	0.0	0.0
47	34	0.0	0.0	0.0	0.0	0.0	0.0
47	35	0.0	0.0	0.0	0.0	0.0	0.0
47	36	0.0	0.0	0.0	0.0	0.0	0.0
47	37	0.0	0.0	0.0	0.0	0.0	0.0
47	38	0.0	0.0	0.0	0.0	0.0	0.0
47	39	0.0	0.0	0.0	0.0	0.0	0.0
47	40	0.0	0.0	0.0	0.0	0.0	0.0
47	41	0.0	0.0	0.0	0.0	0.0	0.0
47	42	0.0	0.0	0.0	0.0	0.0	0.0
47	43	0.0	0.0	0.0	0.0	0.0	0.0
47	44	0.0	0.0	0.0	0.0	0.0	0.0
47	45	0.0	0.0	0.0	0.0	0.0	0.0
47	46	0.0	0.0	0.0	0.0	0.0	0.0
47	47	0.0	0.0	0.0	0.0	0.0	0.0
47	48	0.0	0.0	0.0	0.0	0.0	0.0
47	49	0.0	0.0	0.0	0.0	0.0	0.0
47	50	0.0	0.0	0.0	0.0	0.0	0.0
48	1	0.05	0.04	-0.02	-5.36e-06	1.02e-04	1.62e-05
48	2	0.05	0.04	-0.02	-5.38e-06	1.02e-04	1.62e-05
48	3	0.06	0.05	-0.03	-7.30e-06	9.81e-05	2.15e-05
48	4	0.06	0.05	-0.03	-7.32e-06	9.80e-05	2.15e-05
48	5	0.04	0.03	-0.02	-3.71e-06	6.74e-05	1.07e-05
48	6	0.04	0.03	-0.02	-3.73e-06	6.73e-05	1.08e-05
48	7	0.04	0.04	-0.02	-5.65e-06	6.36e-05	1.60e-05
48	8	0.04	0.04	-0.02	-5.67e-06	6.36e-05	1.60e-05
48	9	0.05	0.04	-0.02	-5.40e-06	1.02e-04	1.62e-05
48	10	0.06	0.05	-0.03	-6.71e-06	9.92e-05	1.99e-05
48	11	0.06	0.05	-0.03	-6.76e-06	9.91e-05	1.99e-05
48	12	0.04	0.03	-0.02	-3.76e-06	6.73e-05	1.08e-05
48	13	0.04	0.03	-0.02	-5.07e-06	6.47e-05	1.44e-05
48	14	0.04	0.04	-0.02	-5.12e-06	6.47e-05	1.45e-05
48	15	0.56	0.13	-0.04	-2.21e-05	7.05e-04	4.56e-04
48	16	0.50	-0.03	-0.03	-6.76e-06	7.75e-04	3.51e-04

48	17	-0.42	0.10	-3.44e-03	-2.22e-06	-6.43e-04	-3.25e-04
48	18	-0.48	-0.07	-9.80e-04	1.31e-05	-5.73e-04	-4.30e-04
48	19	0.54	0.12	-0.04	-2.00e-05	7.13e-04	4.23e-04
48	20	0.51	-0.02	-0.03	-8.85e-06	7.67e-04	3.83e-04
48	21	-0.43	0.08	-2.82e-03	0.0	-6.35e-04	-3.58e-04
48	22	-0.47	-0.05	-1.60e-03	1.10e-05	-5.81e-04	-3.98e-04
48	23	0.51	0.06	-0.03	-1.79e-05	6.27e-04	3.54e-04
48	24	0.45	-0.11	-0.03	-2.58e-06	6.97e-04	2.49e-04
48	25	-0.37	0.17	-5.57e-03	-6.40e-06	-5.65e-04	-2.23e-04
48	26	-0.43	6.45e-03	-3.11e-03	8.96e-06	-4.95e-04	-3.28e-04
48	27	0.50	0.04	-0.03	-1.58e-05	6.35e-04	3.21e-04
48	28	0.46	-0.09	-0.03	-4.67e-06	6.89e-04	2.81e-04
48	29	-0.39	0.16	-4.95e-03	-4.31e-06	-5.57e-04	-2.56e-04
48	30	-0.42	0.02	-3.73e-03	6.87e-06	-5.03e-04	-2.96e-04
48	31	0.29	0.31	-0.03	-3.31e-05	1.52e-04	3.04e-04
48	32	0.08	-0.24	-0.02	1.81e-05	3.84e-04	-4.44e-05
48	33	-4.23e-03	0.30	-0.02	-2.71e-05	-2.53e-04	7.01e-05
48	34	-0.21	-0.25	-9.49e-03	2.41e-05	-2.02e-05	-2.79e-04
48	35	0.28	0.29	-0.03	-3.18e-05	1.29e-04	2.74e-04
48	36	0.07	-0.26	-0.02	1.94e-05	3.61e-04	-7.50e-05
48	37	0.01	0.32	-0.02	-2.84e-05	-2.29e-04	1.01e-04
48	38	-0.20	-0.23	-0.01	2.28e-05	3.17e-06	-2.48e-04
48	39	0.24	0.26	-0.03	-2.61e-05	1.79e-04	1.97e-04
48	40	0.13	-0.19	-0.02	1.11e-05	3.58e-04	6.34e-05
48	41	-0.05	0.26	-0.02	-2.01e-05	-2.26e-04	-3.77e-05
48	42	-0.16	-0.20	-0.01	1.71e-05	-4.70e-05	-1.71e-04
48	43	0.23	0.24	-0.02	-2.48e-05	1.55e-04	1.66e-04
48	44	0.12	-0.21	-0.02	1.24e-05	3.34e-04	3.29e-05
48	45	-0.04	0.28	-0.02	-2.14e-05	-2.02e-04	-7.16e-06
48	46	-0.15	-0.18	-0.01	1.59e-05	-2.36e-05	-1.40e-04
48	47	-0.67	0.09	3.65e-03	5.80e-06	-8.66e-04	-4.30e-04
48	48	0.75	-0.02	-0.04	-1.48e-05	9.98e-04	4.55e-04
48	49	-0.04	-0.37	-0.02	3.08e-05	1.22e-04	-1.20e-04
48	50	0.11	0.43	-0.02	-3.98e-05	1.01e-05	1.46e-04
49	1	0.04	0.04	-0.02	-3.83e-05	9.15e-05	-1.91e-05
49	2	0.04	0.04	-0.02	-3.83e-05	9.17e-05	-1.91e-05
49	3	0.04	0.05	-0.02	-3.82e-05	9.11e-05	-2.16e-05
49	4	0.04	0.05	-0.02	-3.83e-05	9.14e-05	-2.16e-05
49	5	0.03	0.03	-0.01	-2.77e-05	6.43e-05	-1.35e-05
49	6	0.03	0.03	-0.01	-2.77e-05	6.46e-05	-1.35e-05
49	7	0.03	0.04	-0.02	-2.76e-05	6.40e-05	-1.61e-05
49	8	0.03	0.04	-0.02	-2.77e-05	6.42e-05	-1.61e-05
49	9	0.04	0.04	-0.02	-3.84e-05	9.20e-05	-1.90e-05
49	10	0.04	0.04	-0.02	-3.82e-05	9.12e-05	-2.09e-05
49	11	0.04	0.05	-0.02	-3.83e-05	9.17e-05	-2.08e-05
49	12	0.03	0.03	-0.01	-2.78e-05	6.49e-05	-1.35e-05
49	13	0.03	0.03	-0.02	-2.76e-05	6.41e-05	-1.53e-05
49	14	0.03	0.03	-0.02	-2.77e-05	6.46e-05	-1.53e-05
49	15	0.34	0.12	-0.02	-1.12e-04	5.60e-04	-3.33e-04
49	16	0.30	-0.01	-0.02	-5.82e-05	4.91e-04	-3.63e-04
49	17	-0.24	0.08	-0.01	2.97e-06	-3.62e-04	3.33e-04
49	18	-0.28	-0.06	-0.01	5.69e-05	-4.32e-04	3.04e-04
49	19	0.30	0.13	-0.02	-1.10e-04	5.01e-04	-3.32e-04
49	20	0.33	-0.03	-0.02	-6.02e-05	5.50e-04	-3.63e-04
49	21	-0.27	0.09	-0.01	4.95e-06	-4.21e-04	3.34e-04
49	22	-0.24	-0.07	-0.02	5.49e-05	-3.73e-04	3.03e-04
49	23	0.29	0.16	-0.01	-1.29e-04	4.99e-04	-3.36e-04
49	24	0.25	0.03	-0.02	-7.50e-05	4.29e-04	-3.66e-04
49	25	-0.19	0.04	-0.02	1.97e-05	-3.01e-04	3.37e-04
49	26	-0.23	-0.09	-0.02	7.37e-05	-3.70e-04	3.07e-04
49	27	0.25	0.17	-0.01	-1.27e-04	4.40e-04	-3.35e-04
49	28	0.28	9.89e-03	-0.02	-7.70e-05	4.88e-04	-3.67e-04
49	29	-0.22	0.05	-0.02	2.17e-05	-3.60e-04	3.38e-04
49	30	-0.19	-0.11	-0.02	7.17e-05	-3.11e-04	3.06e-04
49	31	0.18	0.26	-9.89e-03	-1.35e-04	3.19e-04	-6.52e-05
49	32	0.05	-0.18	-0.02	4.50e-05	8.65e-05	-1.64e-04
49	33	0.01	0.24	-8.22e-03	-1.00e-04	4.18e-05	1.35e-04
49	34	-0.12	-0.19	-0.02	7.95e-05	-1.90e-04	3.61e-05
49	35	0.17	0.27	-8.48e-03	-1.40e-04	3.00e-04	-6.62e-05
49	36	0.03	-0.17	-0.02	3.99e-05	6.80e-05	-1.65e-04
49	37	0.03	0.23	-9.63e-03	-9.52e-05	6.04e-05	1.36e-04
49	38	-0.11	-0.20	-0.02	8.46e-05	-1.72e-04	3.71e-05
49	39	0.07	0.31	-8.31e-03	-1.28e-04	1.22e-04	-6.24e-05
49	40	0.17	-0.23	-0.02	3.84e-05	2.83e-04	-1.67e-04
49	41	-0.11	0.30	-6.64e-03	-9.37e-05	-1.55e-04	1.38e-04
49	42	-7.42e-03	-0.25	-0.02	7.29e-05	6.30e-06	3.33e-05
49	43	0.05	0.32	-6.90e-03	-1.33e-04	1.04e-04	-6.34e-05

49	44	0.15	-0.22	-0.02	3.34e-05	2.65e-04	-1.68e-04
49	45	-0.09	0.29	-8.05e-03	-8.86e-05	-1.36e-04	1.39e-04
49	46	7.81e-03	-0.26	-0.02	7.80e-05	2.48e-05	3.43e-05
49	47	-0.37	-0.03	-0.02	7.11e-05	-5.72e-04	4.71e-04
49	48	0.43	0.10	-0.01	-1.26e-04	7.01e-04	-5.00e-04
49	49	0.01	-0.36	-0.03	1.11e-04	1.75e-05	-5.69e-05
49	50	0.05	0.42	-3.97e-03	-1.66e-04	1.11e-04	2.79e-05
50	1	0.02	0.03	-0.03	2.60e-05	5.41e-05	-2.76e-06
50	2	0.02	0.03	-0.03	2.54e-05	5.42e-05	-2.53e-06
50	3	0.02	0.04	-0.03	1.17e-05	5.60e-05	-3.52e-06
50	4	0.02	0.04	-0.03	1.12e-05	5.61e-05	-3.29e-06
50	5	0.01	0.02	-0.02	1.78e-05	3.82e-05	-1.32e-06
50	6	0.01	0.02	-0.02	1.73e-05	3.83e-05	-1.09e-06
50	7	0.02	0.03	-0.02	3.57e-06	4.00e-05	-2.08e-06
50	8	0.02	0.03	-0.02	3.03e-06	4.02e-05	-1.85e-06
50	9	0.02	0.03	-0.03	2.49e-05	5.44e-05	-2.30e-06
50	10	0.02	0.04	-0.03	1.60e-05	5.54e-05	-3.29e-06
50	11	0.02	0.04	-0.03	1.49e-05	5.57e-05	-2.83e-06
50	12	0.01	0.02	-0.02	1.67e-05	3.84e-05	0.0
50	13	0.01	0.03	-0.02	7.84e-06	3.95e-05	-1.86e-06
50	14	0.02	0.03	-0.02	6.76e-06	3.97e-05	-1.39e-06
50	15	0.16	0.08	-0.03	-6.24e-05	3.97e-04	-3.57e-05
50	16	0.18	-9.79e-03	-0.03	1.26e-04	3.50e-04	-5.62e-05
50	17	-0.15	0.06	-0.01	-1.01e-04	-2.72e-04	5.30e-05
50	18	-0.13	-0.03	-0.01	8.67e-05	-3.19e-04	3.24e-05
50	19	0.16	0.09	-0.03	-7.49e-05	3.55e-04	-4.15e-05
50	20	0.18	-0.02	-0.03	1.38e-04	3.92e-04	-5.04e-05
50	21	-0.15	0.07	-0.01	-1.14e-04	-3.14e-04	4.72e-05
50	22	-0.13	-0.03	-0.02	9.91e-05	-2.77e-04	3.82e-05
50	23	0.13	0.09	-0.03	-1.30e-04	3.43e-04	-6.63e-05
50	24	0.15	-6.05e-04	-0.03	5.84e-05	2.96e-04	-8.68e-05
50	25	-0.12	0.05	-0.01	-3.42e-05	-2.18e-04	8.35e-05
50	26	-0.10	-0.04	-0.02	1.54e-04	-2.65e-04	6.30e-05
50	27	0.13	0.10	-0.03	-1.42e-04	3.01e-04	-7.20e-05
50	28	0.14	-6.06e-03	-0.03	7.09e-05	3.38e-04	-8.10e-05
50	29	-0.12	0.06	-0.01	-4.67e-05	-2.60e-04	7.78e-05
50	30	-0.10	-0.04	-0.02	1.66e-04	-2.23e-04	6.88e-05
50	31	0.03	0.18	-0.02	-2.96e-04	2.18e-04	1.93e-05
50	32	0.09	-0.12	-0.03	3.31e-04	6.07e-05	-4.91e-05
50	33	-0.06	0.17	-0.02	-3.07e-04	1.71e-05	4.59e-05
50	34	-3.46e-03	-0.13	-0.02	3.20e-04	-1.40e-04	-2.25e-05
50	35	0.02	0.18	-0.02	-3.16e-04	2.02e-04	1.01e-05
50	36	0.08	-0.12	-0.03	3.11e-04	4.46e-05	-5.83e-05
50	37	-0.05	0.17	-0.02	-2.87e-04	3.32e-05	5.50e-05
50	38	5.96e-03	-0.13	-0.02	3.40e-04	-1.24e-04	-1.34e-05
50	39	0.04	0.20	-0.02	-3.37e-04	7.78e-05	0.0
50	40	0.08	-0.14	-0.03	3.73e-04	2.01e-04	-2.99e-05
50	41	-0.06	0.19	-0.01	-3.49e-04	-1.23e-04	2.66e-05
50	42	-8.90e-03	-0.14	-0.03	3.61e-04	0.0	-3.29e-06
50	43	0.03	0.20	-0.02	-3.57e-04	6.17e-05	-9.14e-06
50	44	0.07	-0.14	-0.03	3.53e-04	1.85e-04	-3.91e-05
50	45	-0.05	0.19	-0.01	-3.29e-04	-1.07e-04	3.58e-05
50	46	5.19e-04	-0.15	-0.03	3.82e-04	1.61e-05	5.89e-06
50	47	-0.20	4.86e-03	-0.01	6.57e-05	-4.31e-04	9.49e-05
50	48	0.22	0.05	-0.03	-4.15e-05	5.09e-04	-9.82e-05
50	49	0.02	-0.23	-0.03	5.44e-04	6.00e-05	-2.05e-05
50	50	5.03e-03	0.28	-0.01	-5.20e-04	1.78e-05	1.73e-05
51	1	0.0	0.0	0.0	0.0	0.0	0.0
51	2	0.0	0.0	0.0	0.0	0.0	0.0
51	3	0.0	0.0	0.0	0.0	0.0	0.0
51	4	0.0	0.0	0.0	0.0	0.0	0.0
51	5	0.0	0.0	0.0	0.0	0.0	0.0
51	6	0.0	0.0	0.0	0.0	0.0	0.0
51	7	0.0	0.0	0.0	0.0	0.0	0.0
51	8	0.0	0.0	0.0	0.0	0.0	0.0
51	9	0.0	0.0	0.0	0.0	0.0	0.0
51	10	0.0	0.0	0.0	0.0	0.0	0.0
51	11	0.0	0.0	0.0	0.0	0.0	0.0
51	12	0.0	0.0	0.0	0.0	0.0	0.0
51	13	0.0	0.0	0.0	0.0	0.0	0.0
51	14	0.0	0.0	0.0	0.0	0.0	0.0
51	15	0.0	0.0	0.0	0.0	0.0	0.0
51	16	0.0	0.0	0.0	0.0	0.0	0.0
51	17	0.0	0.0	0.0	0.0	0.0	0.0
51	18	0.0	0.0	0.0	0.0	0.0	0.0
51	19	0.0	0.0	0.0	0.0	0.0	0.0
51	20	0.0	0.0	0.0	0.0	0.0	0.0

51	21	0.0	0.0	0.0	0.0	0.0	0.0
51	22	0.0	0.0	0.0	0.0	0.0	0.0
51	23	0.0	0.0	0.0	0.0	0.0	0.0
51	24	0.0	0.0	0.0	0.0	0.0	0.0
51	25	0.0	0.0	0.0	0.0	0.0	0.0
51	26	0.0	0.0	0.0	0.0	0.0	0.0
51	27	0.0	0.0	0.0	0.0	0.0	0.0
51	28	0.0	0.0	0.0	0.0	0.0	0.0
51	29	0.0	0.0	0.0	0.0	0.0	0.0
51	30	0.0	0.0	0.0	0.0	0.0	0.0
51	31	0.0	0.0	0.0	0.0	0.0	0.0
51	32	0.0	0.0	0.0	0.0	0.0	0.0
51	33	0.0	0.0	0.0	0.0	0.0	0.0
51	34	0.0	0.0	0.0	0.0	0.0	0.0
51	35	0.0	0.0	0.0	0.0	0.0	0.0
51	36	0.0	0.0	0.0	0.0	0.0	0.0
51	37	0.0	0.0	0.0	0.0	0.0	0.0
51	38	0.0	0.0	0.0	0.0	0.0	0.0
51	39	0.0	0.0	0.0	0.0	0.0	0.0
51	40	0.0	0.0	0.0	0.0	0.0	0.0
51	41	0.0	0.0	0.0	0.0	0.0	0.0
51	42	0.0	0.0	0.0	0.0	0.0	0.0
51	43	0.0	0.0	0.0	0.0	0.0	0.0
51	44	0.0	0.0	0.0	0.0	0.0	0.0
51	45	0.0	0.0	0.0	0.0	0.0	0.0
51	46	0.0	0.0	0.0	0.0	0.0	0.0
51	47	0.0	0.0	0.0	0.0	0.0	0.0
51	48	0.0	0.0	0.0	0.0	0.0	0.0
51	49	0.0	0.0	0.0	0.0	0.0	0.0
51	50	0.0	0.0	0.0	0.0	0.0	0.0
52	1	0.0	0.0	0.0	0.0	0.0	0.0
52	2	0.0	0.0	0.0	0.0	0.0	0.0
52	3	0.0	0.0	0.0	0.0	0.0	0.0
52	4	0.0	0.0	0.0	0.0	0.0	0.0
52	5	0.0	0.0	0.0	0.0	0.0	0.0
52	6	0.0	0.0	0.0	0.0	0.0	0.0
52	7	0.0	0.0	0.0	0.0	0.0	0.0
52	8	0.0	0.0	0.0	0.0	0.0	0.0
52	9	0.0	0.0	0.0	0.0	0.0	0.0
52	10	0.0	0.0	0.0	0.0	0.0	0.0
52	11	0.0	0.0	0.0	0.0	0.0	0.0
52	12	0.0	0.0	0.0	0.0	0.0	0.0
52	13	0.0	0.0	0.0	0.0	0.0	0.0
52	14	0.0	0.0	0.0	0.0	0.0	0.0
52	15	0.0	0.0	0.0	0.0	0.0	0.0
52	16	0.0	0.0	0.0	0.0	0.0	0.0
52	17	0.0	0.0	0.0	0.0	0.0	0.0
52	18	0.0	0.0	0.0	0.0	0.0	0.0
52	19	0.0	0.0	0.0	0.0	0.0	0.0
52	20	0.0	0.0	0.0	0.0	0.0	0.0
52	21	0.0	0.0	0.0	0.0	0.0	0.0
52	22	0.0	0.0	0.0	0.0	0.0	0.0
52	23	0.0	0.0	0.0	0.0	0.0	0.0
52	24	0.0	0.0	0.0	0.0	0.0	0.0
52	25	0.0	0.0	0.0	0.0	0.0	0.0
52	26	0.0	0.0	0.0	0.0	0.0	0.0
52	27	0.0	0.0	0.0	0.0	0.0	0.0
52	28	0.0	0.0	0.0	0.0	0.0	0.0
52	29	0.0	0.0	0.0	0.0	0.0	0.0
52	30	0.0	0.0	0.0	0.0	0.0	0.0
52	31	0.0	0.0	0.0	0.0	0.0	0.0
52	32	0.0	0.0	0.0	0.0	0.0	0.0
52	33	0.0	0.0	0.0	0.0	0.0	0.0
52	34	0.0	0.0	0.0	0.0	0.0	0.0
52	35	0.0	0.0	0.0	0.0	0.0	0.0
52	36	0.0	0.0	0.0	0.0	0.0	0.0
52	37	0.0	0.0	0.0	0.0	0.0	0.0
52	38	0.0	0.0	0.0	0.0	0.0	0.0
52	39	0.0	0.0	0.0	0.0	0.0	0.0
52	40	0.0	0.0	0.0	0.0	0.0	0.0
52	41	0.0	0.0	0.0	0.0	0.0	0.0
52	42	0.0	0.0	0.0	0.0	0.0	0.0
52	43	0.0	0.0	0.0	0.0	0.0	0.0
52	44	0.0	0.0	0.0	0.0	0.0	0.0
52	45	0.0	0.0	0.0	0.0	0.0	0.0
52	46	0.0	0.0	0.0	0.0	0.0	0.0
52	47	0.0	0.0	0.0	0.0	0.0	0.0

52	48	0.0	0.0	0.0	0.0	0.0	0.0
52	49	0.0	0.0	0.0	0.0	0.0	0.0
52	50	0.0	0.0	0.0	0.0	0.0	0.0
53	1	0.0	0.0	0.0	0.0	0.0	0.0
53	2	0.0	0.0	0.0	0.0	0.0	0.0
53	3	0.0	0.0	0.0	0.0	0.0	0.0
53	4	0.0	0.0	0.0	0.0	0.0	0.0
53	5	0.0	0.0	0.0	0.0	0.0	0.0
53	6	0.0	0.0	0.0	0.0	0.0	0.0
53	7	0.0	0.0	0.0	0.0	0.0	0.0
53	8	0.0	0.0	0.0	0.0	0.0	0.0
53	9	0.0	0.0	0.0	0.0	0.0	0.0
53	10	0.0	0.0	0.0	0.0	0.0	0.0
53	11	0.0	0.0	0.0	0.0	0.0	0.0
53	12	0.0	0.0	0.0	0.0	0.0	0.0
53	13	0.0	0.0	0.0	0.0	0.0	0.0
53	14	0.0	0.0	0.0	0.0	0.0	0.0
53	15	0.0	0.0	0.0	0.0	0.0	0.0
53	16	0.0	0.0	0.0	0.0	0.0	0.0
53	17	0.0	0.0	0.0	0.0	0.0	0.0
53	18	0.0	0.0	0.0	0.0	0.0	0.0
53	19	0.0	0.0	0.0	0.0	0.0	0.0
53	20	0.0	0.0	0.0	0.0	0.0	0.0
53	21	0.0	0.0	0.0	0.0	0.0	0.0
53	22	0.0	0.0	0.0	0.0	0.0	0.0
53	23	0.0	0.0	0.0	0.0	0.0	0.0
53	24	0.0	0.0	0.0	0.0	0.0	0.0
53	25	0.0	0.0	0.0	0.0	0.0	0.0
53	26	0.0	0.0	0.0	0.0	0.0	0.0
53	27	0.0	0.0	0.0	0.0	0.0	0.0
53	28	0.0	0.0	0.0	0.0	0.0	0.0
53	29	0.0	0.0	0.0	0.0	0.0	0.0
53	30	0.0	0.0	0.0	0.0	0.0	0.0
53	31	0.0	0.0	0.0	0.0	0.0	0.0
53	32	0.0	0.0	0.0	0.0	0.0	0.0
53	33	0.0	0.0	0.0	0.0	0.0	0.0
53	34	0.0	0.0	0.0	0.0	0.0	0.0
53	35	0.0	0.0	0.0	0.0	0.0	0.0
53	36	0.0	0.0	0.0	0.0	0.0	0.0
53	37	0.0	0.0	0.0	0.0	0.0	0.0
53	38	0.0	0.0	0.0	0.0	0.0	0.0
53	39	0.0	0.0	0.0	0.0	0.0	0.0
53	40	0.0	0.0	0.0	0.0	0.0	0.0
53	41	0.0	0.0	0.0	0.0	0.0	0.0
53	42	0.0	0.0	0.0	0.0	0.0	0.0
53	43	0.0	0.0	0.0	0.0	0.0	0.0
53	44	0.0	0.0	0.0	0.0	0.0	0.0
53	45	0.0	0.0	0.0	0.0	0.0	0.0
53	46	0.0	0.0	0.0	0.0	0.0	0.0
53	47	0.0	0.0	0.0	0.0	0.0	0.0
53	48	0.0	0.0	0.0	0.0	0.0	0.0
53	49	0.0	0.0	0.0	0.0	0.0	0.0
53	50	0.0	0.0	0.0	0.0	0.0	0.0
54	1	0.04	0.04	-0.02	3.25e-05	4.46e-05	1.21e-05
54	2	0.04	0.04	-0.02	3.25e-05	4.45e-05	1.22e-05
54	3	0.04	0.05	-0.02	3.16e-05	4.59e-05	1.69e-05
54	4	0.04	0.05	-0.02	3.16e-05	4.58e-05	1.70e-05
54	5	0.03	0.03	-0.02	2.35e-05	2.79e-05	8.16e-06
54	6	0.03	0.03	-0.02	2.35e-05	2.78e-05	8.21e-06
54	7	0.03	0.04	-0.02	2.26e-05	2.92e-05	1.30e-05
54	8	0.03	0.04	-0.02	2.26e-05	2.91e-05	1.30e-05
54	9	0.04	0.04	-0.02	3.25e-05	4.44e-05	1.22e-05
54	10	0.04	0.04	-0.02	3.19e-05	4.55e-05	1.55e-05
54	11	0.04	0.04	-0.02	3.18e-05	4.53e-05	1.56e-05
54	12	0.03	0.03	-0.02	2.35e-05	2.77e-05	8.27e-06
54	13	0.03	0.03	-0.02	2.29e-05	2.88e-05	1.15e-05
54	14	0.03	0.03	-0.02	2.28e-05	2.86e-05	1.16e-05
54	15	0.32	0.10	-0.03	5.76e-05	4.76e-04	3.88e-04
54	16	0.34	-0.07	-0.03	8.95e-05	5.25e-04	2.79e-04
54	17	-0.29	0.13	-7.21e-03	-4.32e-05	-4.68e-04	-2.59e-04
54	18	-0.26	-0.04	-4.05e-03	-1.13e-05	-4.19e-04	-3.67e-04
54	19	0.34	0.09	-0.03	5.39e-05	5.18e-04	3.53e-04
54	20	0.32	-0.05	-0.03	9.32e-05	4.84e-04	3.13e-04
54	21	-0.26	0.12	-7.21e-03	-4.68e-05	-4.27e-04	-2.93e-04
54	22	-0.28	-0.02	-4.05e-03	-7.62e-06	-4.61e-04	-3.33e-04
54	23	0.33	0.05	-0.03	7.00e-05	4.17e-04	3.02e-04
54	24	0.36	-0.11	-0.02	1.02e-04	4.66e-04	1.93e-04

54	25	-0.30	0.18	-0.01	-5.55e-05	-4.09e-04	-1.73e-04
54	26	-0.28	9.53e-03	-7.07e-03	-2.36e-05	-3.60e-04	-2.81e-04
54	27	0.35	0.04	-0.03	6.63e-05	4.58e-04	2.67e-04
54	28	0.34	-0.10	-0.02	1.06e-04	4.24e-04	2.27e-04
54	29	-0.28	0.16	-0.01	-5.92e-05	-3.67e-04	-2.07e-04
54	30	-0.30	0.02	-7.08e-03	-2.00e-05	-4.02e-04	-2.47e-04
54	31	0.08	0.30	-0.02	-1.49e-05	8.84e-05	2.88e-04
54	32	0.16	-0.25	-0.01	9.14e-05	2.52e-04	-7.40e-05
54	33	-0.10	0.31	-0.02	-4.51e-05	-1.95e-04	9.42e-05
54	34	-0.02	-0.24	-7.70e-03	6.12e-05	-3.16e-05	-2.68e-04
54	35	0.09	0.29	-0.02	-1.12e-05	7.06e-05	2.62e-04
54	36	0.16	-0.26	-0.01	9.51e-05	2.34e-04	-9.98e-05
54	37	-0.10	0.33	-0.02	-4.88e-05	-1.77e-04	1.20e-04
54	38	-0.03	-0.23	-8.61e-03	5.75e-05	-1.38e-05	-2.42e-04
54	39	0.15	0.26	-0.02	-2.71e-05	2.27e-04	1.73e-04
54	40	0.09	-0.20	-0.01	1.04e-04	1.13e-04	4.07e-05
54	41	-0.03	0.27	-0.02	-5.73e-05	-5.62e-05	-2.05e-05
54	42	-0.09	-0.20	-7.71e-03	7.34e-05	-1.70e-04	-1.53e-04
54	43	0.16	0.24	-0.02	-2.34e-05	2.09e-04	1.48e-04
54	44	0.09	-0.22	-0.01	1.07e-04	9.52e-05	1.48e-05
54	45	-0.03	0.28	-0.02	-6.10e-05	-3.84e-05	5.31e-06
54	46	-0.10	-0.18	-8.62e-03	6.97e-05	-1.53e-04	-1.28e-04
54	47	-0.46	0.09	-3.15e-03	-5.84e-05	-6.27e-04	-3.52e-04
54	48	0.52	-0.03	-0.03	1.05e-04	6.83e-04	3.72e-04
54	49	0.04	-0.37	-8.01e-03	1.17e-04	-2.15e-05	-1.55e-04
54	50	0.02	0.44	-0.02	-7.08e-05	7.82e-05	1.75e-04
55	1	0.0	0.0	0.0	0.0	0.0	0.0
55	2	0.0	0.0	0.0	0.0	0.0	0.0
55	3	0.0	0.0	0.0	0.0	0.0	0.0
55	4	0.0	0.0	0.0	0.0	0.0	0.0
55	5	0.0	0.0	0.0	0.0	0.0	0.0
55	6	0.0	0.0	0.0	0.0	0.0	0.0
55	7	0.0	0.0	0.0	0.0	0.0	0.0
55	8	0.0	0.0	0.0	0.0	0.0	0.0
55	9	0.0	0.0	0.0	0.0	0.0	0.0
55	10	0.0	0.0	0.0	0.0	0.0	0.0
55	11	0.0	0.0	0.0	0.0	0.0	0.0
55	12	0.0	0.0	0.0	0.0	0.0	0.0
55	13	0.0	0.0	0.0	0.0	0.0	0.0
55	14	0.0	0.0	0.0	0.0	0.0	0.0
55	15	0.0	0.0	0.0	0.0	0.0	0.0
55	16	0.0	0.0	0.0	0.0	0.0	0.0
55	17	0.0	0.0	0.0	0.0	0.0	0.0
55	18	0.0	0.0	0.0	0.0	0.0	0.0
55	19	0.0	0.0	0.0	0.0	0.0	0.0
55	20	0.0	0.0	0.0	0.0	0.0	0.0
55	21	0.0	0.0	0.0	0.0	0.0	0.0
55	22	0.0	0.0	0.0	0.0	0.0	0.0
55	23	0.0	0.0	0.0	0.0	0.0	0.0
55	24	0.0	0.0	0.0	0.0	0.0	0.0
55	25	0.0	0.0	0.0	0.0	0.0	0.0
55	26	0.0	0.0	0.0	0.0	0.0	0.0
55	27	0.0	0.0	0.0	0.0	0.0	0.0
55	28	0.0	0.0	0.0	0.0	0.0	0.0
55	29	0.0	0.0	0.0	0.0	0.0	0.0
55	30	0.0	0.0	0.0	0.0	0.0	0.0
55	31	0.0	0.0	0.0	0.0	0.0	0.0
55	32	0.0	0.0	0.0	0.0	0.0	0.0
55	33	0.0	0.0	0.0	0.0	0.0	0.0
55	34	0.0	0.0	0.0	0.0	0.0	0.0
55	35	0.0	0.0	0.0	0.0	0.0	0.0
55	36	0.0	0.0	0.0	0.0	0.0	0.0
55	37	0.0	0.0	0.0	0.0	0.0	0.0
55	38	0.0	0.0	0.0	0.0	0.0	0.0
55	39	0.0	0.0	0.0	0.0	0.0	0.0
55	40	0.0	0.0	0.0	0.0	0.0	0.0
55	41	0.0	0.0	0.0	0.0	0.0	0.0
55	42	0.0	0.0	0.0	0.0	0.0	0.0
55	43	0.0	0.0	0.0	0.0	0.0	0.0
55	44	0.0	0.0	0.0	0.0	0.0	0.0
55	45	0.0	0.0	0.0	0.0	0.0	0.0
55	46	0.0	0.0	0.0	0.0	0.0	0.0
55	47	0.0	0.0	0.0	0.0	0.0	0.0
55	48	0.0	0.0	0.0	0.0	0.0	0.0
55	49	0.0	0.0	0.0	0.0	0.0	0.0
55	50	0.0	0.0	0.0	0.0	0.0	0.0
56	1	0.04	0.03	-0.01	-5.72e-05	1.76e-04	6.30e-05

56	2	0.04	0.03	-0.01	-5.77e-05	1.77e-04	6.30e-05
56	3	0.06	0.04	-0.01	-7.04e-05	2.09e-04	8.33e-05
56	4	0.06	0.04	-0.01	-7.09e-05	2.09e-04	8.32e-05
56	5	0.03	0.02	-7.79e-03	-4.24e-05	1.20e-04	4.36e-05
56	6	0.03	0.02	-7.78e-03	-4.30e-05	1.20e-04	4.36e-05
56	7	0.05	0.03	-9.82e-03	-5.57e-05	1.53e-04	6.39e-05
56	8	0.05	0.03	-9.82e-03	-5.62e-05	1.53e-04	6.38e-05
56	9	0.04	0.03	-0.01	-5.83e-05	1.77e-04	6.29e-05
56	10	0.06	0.03	-0.01	-6.64e-05	1.99e-04	7.72e-05
56	11	0.06	0.04	-0.01	-6.75e-05	2.00e-04	7.71e-05
56	12	0.03	0.02	-7.77e-03	-4.36e-05	1.20e-04	4.35e-05
56	13	0.04	0.03	-9.21e-03	-5.17e-05	1.43e-04	5.78e-05
56	14	0.04	0.03	-9.20e-03	-5.28e-05	1.43e-04	5.77e-05
56	15	0.28	0.09	-0.02	-1.24e-04	6.38e-04	2.31e-04
56	16	0.30	0.01	-0.02	-2.38e-05	6.77e-04	2.60e-04
56	17	-0.22	0.04	4.27e-03	-7.17e-05	-4.11e-04	-1.57e-04
56	18	-0.21	-0.04	2.13e-03	2.89e-05	-3.72e-04	-1.28e-04
56	19	0.28	0.10	-0.02	-1.41e-04	6.32e-04	2.30e-04
56	20	0.30	-3.83e-03	-0.02	-7.21e-06	6.83e-04	2.62e-04
56	21	-0.23	0.05	5.08e-03	-8.82e-05	-4.17e-04	-1.58e-04
56	22	-0.20	-0.05	1.33e-03	4.55e-05	-3.66e-04	-1.26e-04
56	23	0.28	0.12	-0.02	-1.63e-04	6.41e-04	2.42e-04
56	24	0.30	0.04	-0.02	-6.25e-05	6.80e-04	2.71e-04
56	25	-0.23	5.84e-03	3.73e-03	-3.29e-05	-4.14e-04	-1.67e-04
56	26	-0.21	-0.07	1.59e-03	6.77e-05	-3.75e-04	-1.39e-04
56	27	0.28	0.14	-0.02	-1.80e-04	6.35e-04	2.40e-04
56	28	0.30	0.03	-0.02	-4.60e-05	6.86e-04	2.73e-04
56	29	-0.23	0.02	4.53e-03	-4.95e-05	-4.20e-04	-1.69e-04
56	30	-0.21	-0.09	7.86e-04	8.42e-05	-3.69e-04	-1.37e-04
56	31	0.08	0.17	-8.58e-03	-2.23e-04	2.26e-04	6.19e-05
56	32	0.14	-0.10	-0.02	1.12e-04	3.55e-04	1.58e-04
56	33	-0.07	0.15	-1.49e-03	-2.08e-04	-8.88e-05	-5.45e-05
56	34	-7.22e-03	-0.12	-8.63e-03	1.28e-04	4.00e-05	4.16e-05
56	35	0.08	0.18	-8.41e-03	-2.35e-04	2.27e-04	6.52e-05
56	36	0.14	-0.09	-0.02	1.00e-04	3.56e-04	1.61e-04
56	37	-0.07	0.14	-1.66e-03	-1.96e-04	-8.96e-05	-5.77e-05
56	38	-8.34e-03	-0.13	-8.79e-03	1.40e-04	3.92e-05	3.83e-05
56	39	0.07	0.21	-5.90e-03	-2.78e-04	2.05e-04	5.61e-05
56	40	0.15	-0.15	-0.02	1.67e-04	3.76e-04	1.64e-04
56	41	-0.08	0.20	1.18e-03	-2.63e-04	-1.10e-04	-6.03e-05
56	42	9.57e-04	-0.16	-0.01	1.83e-04	6.10e-05	4.74e-05
56	43	0.07	0.22	-5.74e-03	-2.90e-04	2.06e-04	5.93e-05
56	44	0.15	-0.14	-0.02	1.56e-04	3.77e-04	1.67e-04
56	45	-0.08	0.19	1.02e-03	-2.51e-04	-1.11e-04	-6.35e-05
56	46	-1.65e-04	-0.17	-0.01	1.95e-04	6.02e-05	4.42e-05
56	47	-0.34	-0.04	8.31e-03	2.67e-05	-6.48e-04	-1.65e-04
56	48	0.41	0.09	-0.03	-1.22e-04	9.14e-04	2.68e-04
56	49	0.06	-0.22	-0.02	2.59e-04	1.83e-04	9.21e-05
56	50	0.01	0.27	-1.27e-03	-3.55e-04	8.26e-05	1.14e-05
57	1	0.03	0.03	-0.02	-4.52e-05	1.05e-04	2.18e-05
57	2	0.03	0.03	-0.02	-4.56e-05	1.05e-04	2.20e-05
57	3	0.04	0.03	-0.02	-5.77e-05	1.06e-04	3.04e-05
57	4	0.04	0.03	-0.02	-5.81e-05	1.06e-04	3.06e-05
57	5	0.02	0.02	-0.01	-3.34e-05	7.26e-05	1.55e-05
57	6	0.02	0.02	-0.01	-3.38e-05	7.28e-05	1.56e-05
57	7	0.03	0.03	-0.02	-4.59e-05	7.36e-05	2.41e-05
57	8	0.03	0.03	-0.02	-4.63e-05	7.39e-05	2.43e-05
57	9	0.03	0.03	-0.02	-4.60e-05	1.05e-04	2.21e-05
57	10	0.03	0.03	-0.02	-5.40e-05	1.06e-04	2.79e-05
57	11	0.03	0.03	-0.02	-5.48e-05	1.06e-04	2.81e-05
57	12	0.02	0.02	-0.01	-3.42e-05	7.31e-05	1.58e-05
57	13	0.02	0.02	-0.02	-4.21e-05	7.33e-05	2.16e-05
57	14	0.03	0.03	-0.02	-4.30e-05	7.38e-05	2.18e-05
57	15	0.35	0.08	-0.03	-1.55e-04	6.67e-04	3.78e-04
57	16	0.30	-1.09e-03	-0.03	1.34e-05	7.34e-04	2.72e-04
57	17	-0.26	0.05	-2.33e-05	-9.01e-05	-5.88e-04	-2.34e-04
57	18	-0.30	-0.04	-1.93e-03	7.80e-05	-5.21e-04	-3.40e-04
57	19	0.34	0.10	-0.03	-1.72e-04	6.79e-04	3.68e-04
57	20	0.31	-0.01	-0.03	3.05e-05	7.23e-04	2.82e-04
57	21	-0.27	0.06	5.49e-04	-1.07e-04	-5.77e-04	-2.44e-04
57	22	-0.29	-0.05	-2.50e-03	9.51e-05	-5.33e-04	-3.30e-04
57	23	0.33	0.10	-0.03	-2.16e-04	6.29e-04	3.30e-04
57	24	0.29	0.02	-0.03	-4.82e-05	6.96e-04	2.24e-04
57	25	-0.25	0.03	-1.90e-03	-2.86e-05	-5.50e-04	-1.86e-04
57	26	-0.29	-0.06	-3.81e-03	1.40e-04	-4.83e-04	-2.93e-04
57	27	0.32	0.11	-0.03	-2.33e-04	6.40e-04	3.20e-04
57	28	0.30	4.38e-03	-0.03	-3.10e-05	6.85e-04	2.34e-04

57	29	-0.25	0.04	-1.33e-03	-4.57e-05	-5.39e-04	-1.96e-04
57	30	-0.28	-0.07	-4.38e-03	1.57e-04	-4.94e-04	-2.82e-04
57	31	0.18	0.17	-0.02	-3.28e-04	1.50e-04	2.88e-04
57	32	0.04	-0.11	-0.02	2.32e-04	3.72e-04	-6.67e-05
57	33	3.28e-03	0.16	-7.82e-03	-3.09e-04	-2.26e-04	1.05e-04
57	34	-0.14	-0.12	-0.01	2.51e-04	-4.34e-06	-2.50e-04
57	35	0.18	0.17	-0.02	-3.47e-04	1.39e-04	2.74e-04
57	36	0.04	-0.11	-0.02	2.14e-04	3.61e-04	-8.09e-05
57	37	7.49e-03	0.15	-8.38e-03	-2.90e-04	-2.15e-04	1.19e-04
57	38	-0.14	-0.13	-0.01	2.70e-04	7.08e-06	-2.36e-04
57	39	0.16	0.21	-0.01	-3.85e-04	1.88e-04	2.54e-04
57	40	0.07	-0.15	-0.02	2.89e-04	3.35e-04	-3.25e-05
57	41	-0.03	0.20	-5.91e-03	-3.66e-04	-1.89e-04	7.04e-05
57	42	-0.11	-0.17	-0.02	3.09e-04	-4.16e-05	-2.16e-04
57	43	0.15	0.22	-0.01	-4.04e-04	1.76e-04	2.40e-04
57	44	0.07	-0.15	-0.02	2.71e-04	3.24e-04	-4.67e-05
57	45	-0.02	0.20	-6.48e-03	-3.48e-04	-1.78e-04	8.46e-05
57	46	-0.11	-0.17	-0.02	3.27e-04	-3.02e-05	-2.02e-04
57	47	-0.43	-0.02	4.56e-03	6.45e-05	-8.44e-04	-3.42e-04
57	48	0.47	0.07	-0.04	-1.41e-04	9.90e-04	3.80e-04
57	49	-0.05	-0.23	-0.02	4.50e-04	1.34e-04	-2.28e-04
57	50	0.10	0.28	-9.80e-03	-5.27e-04	1.22e-05	2.66e-04
58	1	0.03	0.03	-0.02	-4.64e-05	9.12e-05	2.22e-05
58	2	0.03	0.03	-0.02	-4.68e-05	9.14e-05	2.23e-05
58	3	0.04	0.04	-0.02	-5.83e-05	9.22e-05	3.04e-05
58	4	0.04	0.04	-0.02	-5.87e-05	9.24e-05	3.05e-05
58	5	0.02	0.02	-0.01	-3.42e-05	6.28e-05	1.58e-05
58	6	0.02	0.02	-0.01	-3.46e-05	6.30e-05	1.59e-05
58	7	0.03	0.03	-0.02	-4.60e-05	6.38e-05	2.39e-05
58	8	0.03	0.03	-0.02	-4.65e-05	6.40e-05	2.40e-05
58	9	0.03	0.03	-0.02	-4.73e-05	9.16e-05	2.24e-05
58	10	0.03	0.03	-0.02	-5.47e-05	9.19e-05	2.79e-05
58	11	0.03	0.03	-0.02	-5.56e-05	9.24e-05	2.81e-05
58	12	0.02	0.02	-0.01	-3.51e-05	6.32e-05	1.60e-05
58	13	0.03	0.03	-0.01	-4.25e-05	6.35e-05	2.15e-05
58	14	0.03	0.03	-0.01	-4.33e-05	6.39e-05	2.17e-05
58	15	0.35	0.07	-0.03	-1.59e-04	6.71e-04	3.87e-04
58	16	0.30	-0.04	-0.03	4.32e-05	7.42e-04	2.54e-04
58	17	-0.25	0.09	1.71e-03	-1.21e-04	-6.15e-04	-2.16e-04
58	18	-0.30	-0.02	-3.59e-04	8.13e-05	-5.45e-04	-3.49e-04
58	19	0.33	0.06	-0.03	-1.46e-04	7.28e-04	3.58e-04
58	20	0.31	-0.03	-0.03	3.02e-05	6.85e-04	2.84e-04
58	21	-0.26	0.08	2.04e-03	-1.08e-04	-5.58e-04	-2.46e-04
58	22	-0.29	-8.20e-03	-6.90e-04	6.83e-05	-6.02e-04	-3.20e-04
58	23	0.32	0.05	-0.03	-5.45e-05	5.99e-04	3.19e-04
58	24	0.27	-0.07	-0.03	1.48e-04	6.70e-04	1.85e-04
58	25	-0.22	0.12	1.01e-03	-2.26e-04	-5.43e-04	-1.47e-04
58	26	-0.27	3.66e-03	-1.06e-03	-2.34e-05	-4.73e-04	-2.81e-04
58	27	0.31	0.03	-0.03	-4.15e-05	6.56e-04	2.89e-04
58	28	0.28	-0.06	-0.03	1.35e-04	6.13e-04	2.15e-04
58	29	-0.24	0.10	1.34e-03	-2.13e-04	-4.86e-04	-1.77e-04
58	30	-0.26	0.01	-1.39e-03	-3.64e-05	-5.30e-04	-2.51e-04
58	31	0.19	0.21	-0.02	-3.82e-04	1.39e-04	3.32e-04
58	32	0.03	-0.17	-0.02	2.93e-04	3.73e-04	-1.13e-04
58	33	0.01	0.21	-6.56e-03	-3.71e-04	-2.47e-04	1.51e-04
58	34	-0.15	-0.16	-0.01	3.04e-04	-1.25e-05	-2.94e-04
58	35	0.19	0.20	-0.02	-3.51e-04	1.17e-04	3.11e-04
58	36	0.02	-0.17	-0.02	3.24e-04	3.52e-04	-1.33e-04
58	37	0.02	0.22	-6.77e-03	-4.02e-04	-2.25e-04	1.71e-04
58	38	-0.14	-0.15	-0.01	2.73e-04	9.15e-06	-2.73e-04
58	39	0.15	0.17	-0.01	-3.39e-04	3.29e-04	2.32e-04
58	40	0.08	-0.13	-0.02	2.49e-04	1.84e-04	-1.31e-05
58	41	-0.03	0.18	-5.46e-03	-3.27e-04	-5.75e-05	5.12e-05
58	42	-0.10	-0.12	-0.01	2.61e-04	-2.02e-04	-1.94e-04
58	43	0.14	0.16	-0.01	-3.07e-04	3.07e-04	2.12e-04
58	44	0.07	-0.14	-0.02	2.81e-04	1.62e-04	-3.37e-05
58	45	-0.02	0.18	-5.67e-03	-3.59e-04	-3.58e-05	7.18e-05
58	46	-0.10	-0.11	-0.01	2.29e-04	-1.80e-04	-1.74e-04
58	47	-0.41	0.06	7.96e-03	-1.21e-04	-8.52e-04	-3.02e-04
58	48	0.46	-0.01	-0.04	4.28e-05	9.79e-04	3.40e-04
58	49	-0.05	-0.24	-0.02	4.66e-04	1.29e-04	-2.39e-04
58	50	0.10	0.29	-9.11e-03	-5.44e-04	-2.93e-06	2.77e-04
59	1	0.0	0.0	0.0	0.0	0.0	0.0
59	2	0.0	0.0	0.0	0.0	0.0	0.0
59	3	0.0	0.0	0.0	0.0	0.0	0.0
59	4	0.0	0.0	0.0	0.0	0.0	0.0
59	5	0.0	0.0	0.0	0.0	0.0	0.0

59	6	0.0	0.0	0.0	0.0	0.0	0.0
59	7	0.0	0.0	0.0	0.0	0.0	0.0
59	8	0.0	0.0	0.0	0.0	0.0	0.0
59	9	0.0	0.0	0.0	0.0	0.0	0.0
59	10	0.0	0.0	0.0	0.0	0.0	0.0
59	11	0.0	0.0	0.0	0.0	0.0	0.0
59	12	0.0	0.0	0.0	0.0	0.0	0.0
59	13	0.0	0.0	0.0	0.0	0.0	0.0
59	14	0.0	0.0	0.0	0.0	0.0	0.0
59	15	0.0	0.0	0.0	0.0	0.0	0.0
59	16	0.0	0.0	0.0	0.0	0.0	0.0
59	17	0.0	0.0	0.0	0.0	0.0	0.0
59	18	0.0	0.0	0.0	0.0	0.0	0.0
59	19	0.0	0.0	0.0	0.0	0.0	0.0
59	20	0.0	0.0	0.0	0.0	0.0	0.0
59	21	0.0	0.0	0.0	0.0	0.0	0.0
59	22	0.0	0.0	0.0	0.0	0.0	0.0
59	23	0.0	0.0	0.0	0.0	0.0	0.0
59	24	0.0	0.0	0.0	0.0	0.0	0.0
59	25	0.0	0.0	0.0	0.0	0.0	0.0
59	26	0.0	0.0	0.0	0.0	0.0	0.0
59	27	0.0	0.0	0.0	0.0	0.0	0.0
59	28	0.0	0.0	0.0	0.0	0.0	0.0
59	29	0.0	0.0	0.0	0.0	0.0	0.0
59	30	0.0	0.0	0.0	0.0	0.0	0.0
59	31	0.0	0.0	0.0	0.0	0.0	0.0
59	32	0.0	0.0	0.0	0.0	0.0	0.0
59	33	0.0	0.0	0.0	0.0	0.0	0.0
59	34	0.0	0.0	0.0	0.0	0.0	0.0
59	35	0.0	0.0	0.0	0.0	0.0	0.0
59	36	0.0	0.0	0.0	0.0	0.0	0.0
59	37	0.0	0.0	0.0	0.0	0.0	0.0
59	38	0.0	0.0	0.0	0.0	0.0	0.0
59	39	0.0	0.0	0.0	0.0	0.0	0.0
59	40	0.0	0.0	0.0	0.0	0.0	0.0
59	41	0.0	0.0	0.0	0.0	0.0	0.0
59	42	0.0	0.0	0.0	0.0	0.0	0.0
59	43	0.0	0.0	0.0	0.0	0.0	0.0
59	44	0.0	0.0	0.0	0.0	0.0	0.0
59	45	0.0	0.0	0.0	0.0	0.0	0.0
59	46	0.0	0.0	0.0	0.0	0.0	0.0
59	47	0.0	0.0	0.0	0.0	0.0	0.0
59	48	0.0	0.0	0.0	0.0	0.0	0.0
59	49	0.0	0.0	0.0	0.0	0.0	0.0
59	50	0.0	0.0	0.0	0.0	0.0	0.0
60	1	0.02	0.03	-0.02	-7.01e-05	7.42e-05	1.32e-05
60	2	0.02	0.03	-0.02	-7.06e-05	7.44e-05	1.32e-05
60	3	0.02	0.04	-0.02	-8.27e-05	7.36e-05	1.32e-05
60	4	0.02	0.04	-0.02	-8.31e-05	7.37e-05	1.32e-05
60	5	0.01	0.02	-0.01	-5.13e-05	5.17e-05	9.89e-06
60	6	0.01	0.02	-0.01	-5.18e-05	5.18e-05	9.85e-06
60	7	0.02	0.03	-0.01	-6.38e-05	5.11e-05	9.88e-06
60	8	0.02	0.03	-0.01	-6.43e-05	5.12e-05	9.85e-06
60	9	0.02	0.03	-0.02	-7.11e-05	7.45e-05	1.31e-05
60	10	0.02	0.03	-0.02	-7.89e-05	7.38e-05	1.32e-05
60	11	0.02	0.03	-0.02	-7.99e-05	7.40e-05	1.31e-05
60	12	0.01	0.02	-0.01	-5.22e-05	5.19e-05	9.82e-06
60	13	0.02	0.03	-0.01	-6.01e-05	5.13e-05	9.88e-06
60	14	0.02	0.03	-0.01	-6.10e-05	5.15e-05	9.81e-06
60	15	0.16	0.08	-0.01	-2.02e-04	3.99e-04	-9.56e-05
60	16	0.18	-2.33e-03	-0.02	-2.02e-05	3.49e-04	-1.11e-04
60	17	-0.15	0.05	-8.30e-03	-9.24e-05	-2.46e-04	1.31e-04
60	18	-0.13	-0.03	-0.02	8.98e-05	-2.96e-04	1.15e-04
60	19	0.16	0.09	-0.01	-2.17e-04	3.57e-04	-9.64e-05
60	20	0.18	-0.02	-0.02	-5.19e-06	3.90e-04	-1.10e-04
60	21	-0.15	0.06	-7.69e-03	-1.07e-04	-2.87e-04	1.30e-04
60	22	-0.14	-0.04	-0.02	1.05e-04	-2.54e-04	1.16e-04
60	23	0.13	0.10	-5.85e-03	-2.68e-04	3.46e-04	-1.20e-04
60	24	0.15	0.01	-0.01	-8.60e-05	2.96e-04	-1.35e-04
60	25	-0.12	0.03	-0.01	-2.66e-05	-1.93e-04	1.55e-04
60	26	-0.10	-0.05	-0.02	1.56e-04	-2.43e-04	1.40e-04
60	27	0.13	0.11	-5.24e-03	-2.83e-04	3.04e-04	-1.21e-04
60	28	0.15	6.13e-04	-0.01	-7.10e-05	3.37e-04	-1.34e-04
60	29	-0.12	0.05	-0.01	-4.16e-05	-2.34e-04	1.54e-04
60	30	-0.10	-0.06	-0.02	1.71e-04	-2.02e-04	1.41e-04
60	31	0.03	0.16	-2.18e-03	-3.77e-04	2.30e-04	1.34e-06
60	32	0.09	-0.11	-0.02	2.31e-04	6.60e-05	-4.94e-05

60	33	-0.06	0.16	-1.36e-03	-3.44e-04	3.69e-05	6.92e-05
60	34	-3.11e-03	-0.12	-0.02	2.64e-04	-1.27e-04	1.84e-05
60	35	0.02	0.17	-6.28e-04	-3.96e-04	2.14e-04	-6.01e-06
60	36	0.08	-0.10	-0.02	2.11e-04	5.01e-05	-5.68e-05
60	37	-0.05	0.15	-2.91e-03	-3.24e-04	5.28e-05	7.65e-05
60	38	6.31e-03	-0.12	-0.03	2.84e-04	-1.12e-04	2.58e-05
60	39	0.04	0.21	-1.62e-04	-4.27e-04	9.32e-05	-1.40e-06
60	40	0.09	-0.15	-0.03	2.81e-04	2.03e-04	-4.67e-05
60	41	-0.06	0.20	6.55e-04	-3.94e-04	-1.00e-04	6.65e-05
60	42	-8.50e-03	-0.16	-0.03	3.14e-04	9.67e-06	2.12e-05
60	43	0.03	0.21	1.39e-03	-4.46e-04	7.74e-05	-8.75e-06
60	44	0.08	-0.15	-0.03	2.61e-04	1.87e-04	-5.40e-05
60	45	-0.05	0.19	-8.97e-04	-3.74e-04	-8.43e-05	7.38e-05
60	46	9.28e-04	-0.16	-0.03	3.34e-04	2.56e-05	2.85e-05
60	47	-0.20	-0.01	-0.02	8.80e-05	-4.01e-04	1.95e-04
60	48	0.23	0.06	-9.11e-03	-2.01e-04	5.04e-04	-1.75e-04
60	49	0.02	-0.23	-0.03	4.65e-04	2.32e-05	-5.57e-06
60	50	5.33e-03	0.27	6.39e-03	-5.77e-04	7.98e-05	2.53e-05
61	1	-6.50e-03	0.03	-0.01	-5.82e-05	-8.81e-05	-4.71e-05
61	2	-6.36e-03	0.03	-0.01	-5.88e-05	-8.77e-05	-4.70e-05
61	3	-0.01	0.04	-0.01	-7.05e-05	-9.96e-05	-6.74e-05
61	4	-0.01	0.04	-0.01	-7.10e-05	-9.93e-05	-6.72e-05
61	5	-3.22e-03	0.02	-8.91e-03	-4.29e-05	-5.67e-05	-3.17e-05
61	6	-3.08e-03	0.02	-8.89e-03	-4.35e-05	-5.63e-05	-3.15e-05
61	7	-9.12e-03	0.03	-0.01	-5.52e-05	-6.82e-05	-5.19e-05
61	8	-8.98e-03	0.03	-0.01	-5.57e-05	-6.78e-05	-5.17e-05
61	9	-6.22e-03	0.03	-0.01	-5.93e-05	-8.74e-05	-4.68e-05
61	10	-0.01	0.04	-0.01	-6.68e-05	-9.62e-05	-6.13e-05
61	11	-0.01	0.04	-0.01	-6.79e-05	-9.54e-05	-6.10e-05
61	12	-2.94e-03	0.02	-8.87e-03	-4.41e-05	-5.59e-05	-3.13e-05
61	13	-7.35e-03	0.03	-0.01	-5.15e-05	-6.47e-05	-4.58e-05
61	14	-7.06e-03	0.03	-0.01	-5.26e-05	-6.40e-05	-4.55e-05
61	15	0.23	0.06	3.19e-03	-1.37e-04	4.62e-04	1.41e-04
61	16	0.25	-0.05	-1.11e-04	3.02e-06	4.20e-04	1.70e-04
61	17	-0.26	0.11	-0.02	-9.87e-05	-5.43e-04	-2.49e-04
61	18	-0.24	-4.58e-03	-0.02	4.14e-05	-5.85e-04	-2.21e-04
61	19	0.23	0.05	2.48e-03	-1.22e-04	4.61e-04	1.69e-04
61	20	0.25	-0.04	5.95e-04	-1.21e-05	4.21e-04	1.42e-04
61	21	-0.26	0.09	-0.02	-8.36e-05	-5.44e-04	-2.22e-04
61	22	-0.24	7.64e-03	-0.02	2.64e-05	-5.84e-04	-2.48e-04
61	23	0.23	0.02	2.61e-03	-5.04e-05	4.65e-04	1.49e-04
61	24	0.25	-0.09	-6.88e-04	8.97e-05	4.23e-04	1.78e-04
61	25	-0.26	0.14	-0.02	-1.85e-04	-5.46e-04	-2.57e-04
61	26	-0.25	0.03	-0.02	-4.53e-05	-5.88e-04	-2.29e-04
61	27	0.23	7.78e-03	1.90e-03	-3.53e-05	4.64e-04	1.76e-04
61	28	0.25	-0.08	1.78e-05	7.46e-05	4.24e-04	1.50e-04
61	29	-0.27	0.13	-0.02	-1.70e-04	-5.47e-04	-2.30e-04
61	30	-0.24	0.05	-0.02	-6.03e-05	-5.87e-04	-2.56e-04
61	31	0.04	0.20	-8.45e-04	-2.87e-04	1.60e-04	-2.87e-05
61	32	0.10	-0.17	-0.01	1.80e-04	1.93e-05	6.65e-05
61	33	-0.11	0.22	-7.60e-03	-2.76e-04	-1.42e-04	-1.46e-04
61	34	-0.05	-0.15	-0.02	1.91e-04	-2.82e-04	-5.08e-05
61	35	0.04	0.19	-1.02e-03	-2.61e-04	1.60e-04	-2.64e-05
61	36	0.10	-0.18	-0.01	2.06e-04	2.03e-05	6.87e-05
61	37	-0.11	0.23	-7.43e-03	-3.02e-04	-1.43e-04	-1.48e-04
61	38	-0.05	-0.14	-0.02	1.65e-04	-2.83e-04	-5.31e-05
61	39	0.03	0.16	-3.20e-03	-2.37e-04	1.56e-04	6.28e-05
61	40	0.10	-0.12	-9.49e-03	1.30e-04	2.29e-05	-2.50e-05
61	41	-0.11	0.18	-9.95e-03	-2.25e-04	-1.45e-04	-5.45e-05
61	42	-0.04	-0.11	-0.02	1.41e-04	-2.79e-04	-1.42e-04
61	43	0.03	0.15	-3.37e-03	-2.11e-04	1.57e-04	6.51e-05
61	44	0.10	-0.14	-9.66e-03	1.56e-04	2.39e-05	-2.27e-05
61	45	-0.12	0.19	-9.78e-03	-2.51e-04	-1.46e-04	-5.68e-05
61	46	-0.05	-0.10	-0.02	1.15e-04	-2.79e-04	-1.45e-04
61	47	-0.37	0.10	-0.03	-1.19e-04	-8.11e-04	-2.55e-04
61	48	0.36	-0.04	6.32e-03	2.35e-05	6.88e-04	1.76e-04
61	49	0.01	-0.24	-0.02	2.85e-04	-9.64e-05	-7.28e-05
61	50	-0.02	0.29	-3.10e-03	-3.80e-04	-2.61e-05	-6.66e-06
62	1	0.04	0.04	-0.02	3.77e-05	7.99e-05	3.21e-05
62	2	0.04	0.04	-0.02	3.77e-05	8.00e-05	3.22e-05
62	3	0.04	0.04	-0.02	3.69e-05	7.70e-05	3.70e-05
62	4	0.04	0.04	-0.02	3.68e-05	7.72e-05	3.70e-05
62	5	0.03	0.03	-0.02	2.72e-05	5.60e-05	2.29e-05
62	6	0.03	0.03	-0.02	2.72e-05	5.61e-05	2.30e-05
62	7	0.03	0.03	-0.02	2.64e-05	5.31e-05	2.78e-05
62	8	0.03	0.03	-0.02	2.64e-05	5.33e-05	2.79e-05
62	9	0.04	0.04	-0.02	3.76e-05	8.02e-05	3.23e-05

62	10	0.04	0.04	-0.02	3.71e-05	7.79e-05	3.55e-05
62	11	0.04	0.04	-0.02	3.71e-05	7.82e-05	3.57e-05
62	12	0.03	0.03	-0.02	2.72e-05	5.62e-05	2.31e-05
62	13	0.03	0.03	-0.02	2.66e-05	5.40e-05	2.63e-05
62	14	0.03	0.03	-0.02	2.66e-05	5.43e-05	2.65e-05
62	15	0.32	0.12	-0.02	7.13e-05	4.73e-04	3.71e-04
62	16	0.34	-0.01	-0.01	1.05e-04	5.18e-04	2.71e-04
62	17	-0.29	0.07	-0.02	-5.14e-05	-4.08e-04	-2.22e-04
62	18	-0.26	-0.06	-0.02	-1.75e-05	-3.64e-04	-3.22e-04
62	19	0.34	0.13	-0.02	6.96e-05	5.11e-04	3.41e-04
62	20	0.32	-0.03	-0.01	1.07e-04	4.80e-04	3.02e-04
62	21	-0.27	0.09	-0.02	-5.30e-05	-3.70e-04	-2.52e-04
62	22	-0.28	-0.07	-0.02	-1.59e-05	-4.01e-04	-2.91e-04
62	23	0.33	0.16	-0.02	4.90e-05	4.28e-04	3.06e-04
62	24	0.36	0.03	-0.02	8.28e-05	4.72e-04	2.06e-04
62	25	-0.30	0.03	-0.01	-2.91e-05	-3.63e-04	-1.57e-04
62	26	-0.28	-0.10	-0.01	4.78e-06	-3.19e-04	-2.57e-04
62	27	0.35	0.17	-0.02	4.74e-05	4.66e-04	2.76e-04
62	28	0.33	9.76e-03	-0.02	8.45e-05	4.35e-04	2.37e-04
62	29	-0.28	0.05	-0.01	-3.07e-05	-3.25e-04	-1.87e-04
62	30	-0.30	-0.11	-0.01	6.41e-06	-3.56e-04	-2.26e-04
62	31	0.08	0.26	-0.02	-1.12e-05	1.14e-04	2.80e-04
62	32	0.16	-0.18	-0.01	1.02e-04	2.61e-04	-5.26e-05
62	33	-0.10	0.24	-0.02	-4.80e-05	-1.51e-04	1.02e-04
62	34	-0.02	-0.20	-0.01	6.49e-05	-3.86e-06	-2.30e-04
62	35	0.08	0.27	-0.02	-1.79e-05	9.99e-05	2.61e-04
62	36	0.16	-0.17	-0.01	9.50e-05	2.47e-04	-7.21e-05
62	37	-0.10	0.23	-0.02	-4.13e-05	-1.37e-04	1.22e-04
62	38	-0.03	-0.21	-0.01	7.16e-05	9.72e-06	-2.11e-04
62	39	0.15	0.31	-0.02	-1.66e-05	2.38e-04	1.78e-04
62	40	0.09	-0.24	-0.01	1.07e-04	1.36e-04	4.98e-05
62	41	-0.03	0.30	-0.02	-5.34e-05	-2.60e-05	0.0
62	42	-0.09	-0.25	-0.01	7.04e-05	-1.29e-04	-1.28e-04
62	43	0.15	0.32	-0.02	-2.33e-05	2.25e-04	1.58e-04
62	44	0.09	-0.22	-0.01	1.00e-04	1.22e-04	3.03e-05
62	45	-0.03	0.28	-0.02	-4.67e-05	-1.24e-05	1.94e-05
62	46	-0.10	-0.26	-0.01	7.70e-05	-1.15e-04	-1.09e-04
62	47	-0.46	-0.04	-0.01	-3.98e-05	-5.63e-04	-3.35e-04
62	48	0.51	0.10	-0.02	9.35e-05	6.73e-04	3.84e-04
62	49	0.04	-0.36	-9.07e-03	1.18e-04	9.37e-05	-1.42e-04
62	50	0.02	0.42	-0.02	-6.47e-05	1.60e-05	1.91e-04
63	1	0.04	0.03	-0.03	5.20e-04	1.50e-04	2.11e-04
63	2	0.04	0.03	-0.03	5.20e-04	1.51e-04	2.11e-04
63	3	0.04	0.04	-0.03	5.21e-04	1.51e-04	2.11e-04
63	4	0.04	0.04	-0.03	5.20e-04	1.51e-04	2.11e-04
63	5	0.03	0.02	-0.02	3.71e-04	1.03e-04	1.50e-04
63	6	0.03	0.02	-0.02	3.71e-04	1.03e-04	1.50e-04
63	7	0.03	0.03	-0.02	3.71e-04	1.04e-04	1.51e-04
63	8	0.03	0.03	-0.02	3.71e-04	1.04e-04	1.51e-04
63	9	0.04	0.03	-0.03	5.20e-04	1.51e-04	2.11e-04
63	10	0.04	0.04	-0.03	5.20e-04	1.51e-04	2.11e-04
63	11	0.04	0.04	-0.03	5.20e-04	1.51e-04	2.11e-04
63	12	0.03	0.03	-0.02	3.71e-04	1.03e-04	1.50e-04
63	13	0.03	0.03	-0.02	3.71e-04	1.04e-04	1.51e-04
63	14	0.03	0.03	-0.02	3.71e-04	1.04e-04	1.51e-04
63	15	0.32	0.11	-0.03	3.54e-04	3.55e-04	1.31e-04
63	16	0.34	-0.04	-0.03	3.80e-04	3.82e-04	9.60e-05
63	17	-0.29	0.10	-8.83e-03	3.62e-04	-1.75e-04	2.05e-04
63	18	-0.26	-0.05	-0.01	3.88e-04	-1.48e-04	1.70e-04
63	19	0.34	0.11	-0.03	3.54e-04	3.78e-04	1.03e-04
63	20	0.32	-0.04	-0.03	3.81e-04	3.59e-04	1.24e-04
63	21	-0.27	0.10	-0.01	3.61e-04	-1.52e-04	1.77e-04
63	22	-0.28	-0.05	-8.89e-03	3.88e-04	-1.71e-04	1.98e-04
63	23	0.33	0.10	-0.03	3.55e-04	3.23e-04	6.92e-05
63	24	0.36	-0.05	-0.03	3.81e-04	3.50e-04	3.43e-05
63	25	-0.30	0.11	-9.97e-03	3.61e-04	-1.42e-04	2.67e-04
63	26	-0.28	-0.04	-0.01	3.87e-04	-1.16e-04	2.32e-04
63	27	0.35	0.10	-0.03	3.54e-04	3.46e-04	4.15e-05
63	28	0.34	-0.05	-0.03	3.81e-04	3.27e-04	6.20e-05
63	29	-0.28	0.11	-0.01	3.61e-04	-1.20e-04	2.39e-04
63	30	-0.30	-0.04	-0.01	3.88e-04	-1.38e-04	2.60e-04
63	31	0.08	0.28	-0.02	3.27e-04	1.39e-04	1.98e-04
63	32	0.16	-0.22	-0.03	4.13e-04	2.28e-04	8.12e-05
63	33	-0.10	0.27	-0.02	3.29e-04	-2.06e-05	2.20e-04
63	34	-0.02	-0.22	-0.02	4.15e-04	6.87e-05	1.03e-04
63	35	0.09	0.27	-0.02	3.27e-04	1.29e-04	1.79e-04
63	36	0.16	-0.22	-0.03	4.13e-04	2.18e-04	6.27e-05

63	37	-0.10	0.28	-0.02	3.29e-04	-1.08e-05	2.38e-04
63	38	-0.03	-0.22	-0.02	4.15e-04	7.84e-05	1.22e-04
63	39	0.15	0.28	-0.03	3.25e-04	2.14e-04	1.05e-04
63	40	0.09	-0.22	-0.02	4.15e-04	1.52e-04	1.74e-04
63	41	-0.03	0.28	-0.02	3.27e-04	5.52e-05	1.27e-04
63	42	-0.09	-0.23	-0.02	4.17e-04	-7.15e-06	1.96e-04
63	43	0.15	0.28	-0.03	3.25e-04	2.05e-04	8.67e-05
63	44	0.09	-0.23	-0.02	4.15e-04	1.42e-04	1.55e-04
63	45	-0.03	0.28	-0.02	3.27e-04	6.50e-05	1.46e-04
63	46	-0.10	-0.22	-0.02	4.17e-04	2.60e-06	2.15e-04
63	47	-0.46	0.02	-4.54e-03	3.76e-04	-2.67e-04	2.63e-04
63	48	0.51	0.03	-0.04	3.67e-04	4.75e-04	3.83e-05
63	49	0.04	-0.37	-0.02	4.41e-04	1.26e-04	1.29e-04
63	50	0.02	0.43	-0.02	3.01e-04	8.16e-05	1.72e-04
64	1	6.71e-03	9.66e-03	-0.04	-2.36e-04	8.95e-05	-2.37e-05
64	2	6.72e-03	9.65e-03	-0.04	-2.36e-04	8.94e-05	-2.39e-05
64	3	9.21e-03	0.01	-0.05	-3.62e-04	1.17e-04	-4.37e-05
64	4	9.22e-03	0.01	-0.05	-3.62e-04	1.17e-04	-4.39e-05
64	5	4.86e-03	7.16e-03	-0.03	-1.71e-04	6.61e-05	-1.75e-05
64	6	4.86e-03	7.15e-03	-0.03	-1.71e-04	6.61e-05	-1.77e-05
64	7	7.35e-03	9.93e-03	-0.04	-2.97e-04	9.34e-05	-3.75e-05
64	8	7.36e-03	9.92e-03	-0.04	-2.97e-04	9.34e-05	-3.77e-05
64	9	6.73e-03	9.64e-03	-0.04	-2.36e-04	8.94e-05	-2.41e-05
64	10	8.46e-03	0.01	-0.04	-3.24e-04	1.09e-04	-3.77e-05
64	11	8.48e-03	0.01	-0.05	-3.24e-04	1.08e-04	-3.82e-05
64	12	4.87e-03	7.14e-03	-0.03	-1.71e-04	6.60e-05	-1.79e-05
64	13	6.60e-03	9.10e-03	-0.03	-2.59e-04	8.52e-05	-3.15e-05
64	14	6.62e-03	9.08e-03	-0.04	-2.60e-04	8.51e-05	-3.19e-05
64	15	0.09	0.04	-0.04	-3.09e-04	2.55e-04	-6.33e-05
64	16	0.07	-0.01	-0.03	-1.69e-04	2.15e-04	-5.73e-05
64	17	-0.06	0.03	-0.03	-2.74e-04	-6.09e-05	6.34e-06
64	18	-0.08	-0.02	-0.02	-1.33e-04	-1.01e-04	1.23e-05
64	19	0.07	0.04	-0.04	-3.18e-04	2.19e-04	-6.63e-05
64	20	0.09	-0.02	-0.03	-1.61e-04	2.51e-04	-5.42e-05
64	21	-0.08	0.03	-0.03	-2.82e-04	-9.72e-05	3.27e-06
64	22	-0.06	-0.03	-0.02	-1.25e-04	-6.51e-05	1.54e-05
64	23	0.07	0.04	-0.04	-3.23e-04	2.02e-04	-6.75e-05
64	24	0.05	-7.18e-03	-0.03	-1.83e-04	1.61e-04	-6.15e-05
64	25	-0.03	0.02	-0.03	-2.60e-04	-7.33e-06	1.06e-05
64	26	-0.05	-0.03	-0.03	-1.20e-04	-4.78e-05	1.66e-05
64	27	0.05	0.05	-0.04	-3.31e-04	1.66e-04	-7.06e-05
64	28	0.06	-0.01	-0.03	-1.75e-04	1.98e-04	-5.85e-05
64	29	-0.05	0.03	-0.03	-2.68e-04	-4.36e-05	7.53e-06
64	30	-0.04	-0.03	-0.03	-1.12e-04	-1.15e-05	1.97e-05
64	31	0.06	0.10	-0.04	-4.61e-04	1.92e-04	-4.59e-05
64	32	-4.22e-03	-0.08	-0.03	7.04e-06	5.70e-05	-2.59e-05
64	33	0.02	0.09	-0.04	-4.50e-04	9.70e-05	-2.50e-05
64	34	-0.05	-0.08	-0.02	1.77e-05	-3.78e-05	-5.05e-06
64	35	0.05	0.10	-0.04	-4.65e-04	1.76e-04	-4.72e-05
64	36	-0.01	-0.07	-0.02	2.92e-06	4.10e-05	-2.72e-05
64	37	0.02	0.09	-0.04	-4.46e-04	1.13e-04	-2.37e-05
64	38	-0.04	-0.08	-0.02	2.18e-05	-2.18e-05	-3.77e-06
64	39	5.45e-03	0.11	-0.04	-4.88e-04	7.10e-05	-5.61e-05
64	40	0.05	-0.09	-0.03	3.44e-05	1.78e-04	-1.57e-05
64	41	-0.04	0.10	-0.04	-4.77e-04	-2.39e-05	-3.53e-05
64	42	6.26e-03	-0.09	-0.02	4.50e-05	8.31e-05	5.19e-06
64	43	-2.12e-03	0.11	-0.04	-4.92e-04	5.49e-05	-5.74e-05
64	44	0.04	-0.08	-0.03	3.02e-05	1.62e-04	-1.70e-05
64	45	-0.03	0.10	-0.04	-4.73e-04	-7.84e-06	-3.40e-05
64	46	0.01	-0.09	-0.02	4.92e-05	9.91e-05	6.46e-06
64	47	-0.08	-3.99e-03	-0.03	-1.81e-04	-1.06e-04	3.20e-05
64	48	0.09	0.02	-0.04	-2.61e-04	2.60e-04	-8.30e-05
64	49	-4.31e-03	-0.14	-0.02	1.72e-04	9.61e-05	-3.65e-06
64	50	0.02	0.15	-0.04	-6.15e-04	5.79e-05	-4.73e-05
65	1	0.0	0.0	0.0	0.0	0.0	0.0
65	2	0.0	0.0	0.0	0.0	0.0	0.0
65	3	0.0	0.0	0.0	0.0	0.0	0.0
65	4	0.0	0.0	0.0	0.0	0.0	0.0
65	5	0.0	0.0	0.0	0.0	0.0	0.0
65	6	0.0	0.0	0.0	0.0	0.0	0.0
65	7	0.0	0.0	0.0	0.0	0.0	0.0
65	8	0.0	0.0	0.0	0.0	0.0	0.0
65	9	0.0	0.0	0.0	0.0	0.0	0.0
65	10	0.0	0.0	0.0	0.0	0.0	0.0
65	11	0.0	0.0	0.0	0.0	0.0	0.0
65	12	0.0	0.0	0.0	0.0	0.0	0.0
65	13	0.0	0.0	0.0	0.0	0.0	0.0

65	14	0.0	0.0	0.0	0.0	0.0	0.0
65	15	0.0	0.0	0.0	0.0	0.0	0.0
65	16	0.0	0.0	0.0	0.0	0.0	0.0
65	17	0.0	0.0	0.0	0.0	0.0	0.0
65	18	0.0	0.0	0.0	0.0	0.0	0.0
65	19	0.0	0.0	0.0	0.0	0.0	0.0
65	20	0.0	0.0	0.0	0.0	0.0	0.0
65	21	0.0	0.0	0.0	0.0	0.0	0.0
65	22	0.0	0.0	0.0	0.0	0.0	0.0
65	23	0.0	0.0	0.0	0.0	0.0	0.0
65	24	0.0	0.0	0.0	0.0	0.0	0.0
65	25	0.0	0.0	0.0	0.0	0.0	0.0
65	26	0.0	0.0	0.0	0.0	0.0	0.0
65	27	0.0	0.0	0.0	0.0	0.0	0.0
65	28	0.0	0.0	0.0	0.0	0.0	0.0
65	29	0.0	0.0	0.0	0.0	0.0	0.0
65	30	0.0	0.0	0.0	0.0	0.0	0.0
65	31	0.0	0.0	0.0	0.0	0.0	0.0
65	32	0.0	0.0	0.0	0.0	0.0	0.0
65	33	0.0	0.0	0.0	0.0	0.0	0.0
65	34	0.0	0.0	0.0	0.0	0.0	0.0
65	35	0.0	0.0	0.0	0.0	0.0	0.0
65	36	0.0	0.0	0.0	0.0	0.0	0.0
65	37	0.0	0.0	0.0	0.0	0.0	0.0
65	38	0.0	0.0	0.0	0.0	0.0	0.0
65	39	0.0	0.0	0.0	0.0	0.0	0.0
65	40	0.0	0.0	0.0	0.0	0.0	0.0
65	41	0.0	0.0	0.0	0.0	0.0	0.0
65	42	0.0	0.0	0.0	0.0	0.0	0.0
65	43	0.0	0.0	0.0	0.0	0.0	0.0
65	44	0.0	0.0	0.0	0.0	0.0	0.0
65	45	0.0	0.0	0.0	0.0	0.0	0.0
65	46	0.0	0.0	0.0	0.0	0.0	0.0
65	47	0.0	0.0	0.0	0.0	0.0	0.0
65	48	0.0	0.0	0.0	0.0	0.0	0.0
65	49	0.0	0.0	0.0	0.0	0.0	0.0
65	50	0.0	0.0	0.0	0.0	0.0	0.0
66	1	0.0	0.0	0.0	0.0	0.0	0.0
66	2	0.0	0.0	0.0	0.0	0.0	0.0
66	3	0.0	0.0	0.0	0.0	0.0	0.0
66	4	0.0	0.0	0.0	0.0	0.0	0.0
66	5	0.0	0.0	0.0	0.0	0.0	0.0
66	6	0.0	0.0	0.0	0.0	0.0	0.0
66	7	0.0	0.0	0.0	0.0	0.0	0.0
66	8	0.0	0.0	0.0	0.0	0.0	0.0
66	9	0.0	0.0	0.0	0.0	0.0	0.0
66	10	0.0	0.0	0.0	0.0	0.0	0.0
66	11	0.0	0.0	0.0	0.0	0.0	0.0
66	12	0.0	0.0	0.0	0.0	0.0	0.0
66	13	0.0	0.0	0.0	0.0	0.0	0.0
66	14	0.0	0.0	0.0	0.0	0.0	0.0
66	15	0.0	0.0	0.0	0.0	0.0	0.0
66	16	0.0	0.0	0.0	0.0	0.0	0.0
66	17	0.0	0.0	0.0	0.0	0.0	0.0
66	18	0.0	0.0	0.0	0.0	0.0	0.0
66	19	0.0	0.0	0.0	0.0	0.0	0.0
66	20	0.0	0.0	0.0	0.0	0.0	0.0
66	21	0.0	0.0	0.0	0.0	0.0	0.0
66	22	0.0	0.0	0.0	0.0	0.0	0.0
66	23	0.0	0.0	0.0	0.0	0.0	0.0
66	24	0.0	0.0	0.0	0.0	0.0	0.0
66	25	0.0	0.0	0.0	0.0	0.0	0.0
66	26	0.0	0.0	0.0	0.0	0.0	0.0
66	27	0.0	0.0	0.0	0.0	0.0	0.0
66	28	0.0	0.0	0.0	0.0	0.0	0.0
66	29	0.0	0.0	0.0	0.0	0.0	0.0
66	30	0.0	0.0	0.0	0.0	0.0	0.0
66	31	0.0	0.0	0.0	0.0	0.0	0.0
66	32	0.0	0.0	0.0	0.0	0.0	0.0
66	33	0.0	0.0	0.0	0.0	0.0	0.0
66	34	0.0	0.0	0.0	0.0	0.0	0.0
66	35	0.0	0.0	0.0	0.0	0.0	0.0
66	36	0.0	0.0	0.0	0.0	0.0	0.0
66	37	0.0	0.0	0.0	0.0	0.0	0.0
66	38	0.0	0.0	0.0	0.0	0.0	0.0
66	39	0.0	0.0	0.0	0.0	0.0	0.0
66	40	0.0	0.0	0.0	0.0	0.0	0.0

66	41	0.0	0.0	0.0	0.0	0.0	0.0
66	42	0.0	0.0	0.0	0.0	0.0	0.0
66	43	0.0	0.0	0.0	0.0	0.0	0.0
66	44	0.0	0.0	0.0	0.0	0.0	0.0
66	45	0.0	0.0	0.0	0.0	0.0	0.0
66	46	0.0	0.0	0.0	0.0	0.0	0.0
66	47	0.0	0.0	0.0	0.0	0.0	0.0
66	48	0.0	0.0	0.0	0.0	0.0	0.0
66	49	0.0	0.0	0.0	0.0	0.0	0.0
66	50	0.0	0.0	0.0	0.0	0.0	0.0
67	1	0.0	0.0	0.0	0.0	0.0	0.0
67	2	0.0	0.0	0.0	0.0	0.0	0.0
67	3	0.0	0.0	0.0	0.0	0.0	0.0
67	4	0.0	0.0	0.0	0.0	0.0	0.0
67	5	0.0	0.0	0.0	0.0	0.0	0.0
67	6	0.0	0.0	0.0	0.0	0.0	0.0
67	7	0.0	0.0	0.0	0.0	0.0	0.0
67	8	0.0	0.0	0.0	0.0	0.0	0.0
67	9	0.0	0.0	0.0	0.0	0.0	0.0
67	10	0.0	0.0	0.0	0.0	0.0	0.0
67	11	0.0	0.0	0.0	0.0	0.0	0.0
67	12	0.0	0.0	0.0	0.0	0.0	0.0
67	13	0.0	0.0	0.0	0.0	0.0	0.0
67	14	0.0	0.0	0.0	0.0	0.0	0.0
67	15	0.0	0.0	0.0	0.0	0.0	0.0
67	16	0.0	0.0	0.0	0.0	0.0	0.0
67	17	0.0	0.0	0.0	0.0	0.0	0.0
67	18	0.0	0.0	0.0	0.0	0.0	0.0
67	19	0.0	0.0	0.0	0.0	0.0	0.0
67	20	0.0	0.0	0.0	0.0	0.0	0.0
67	21	0.0	0.0	0.0	0.0	0.0	0.0
67	22	0.0	0.0	0.0	0.0	0.0	0.0
67	23	0.0	0.0	0.0	0.0	0.0	0.0
67	24	0.0	0.0	0.0	0.0	0.0	0.0
67	25	0.0	0.0	0.0	0.0	0.0	0.0
67	26	0.0	0.0	0.0	0.0	0.0	0.0
67	27	0.0	0.0	0.0	0.0	0.0	0.0
67	28	0.0	0.0	0.0	0.0	0.0	0.0
67	29	0.0	0.0	0.0	0.0	0.0	0.0
67	30	0.0	0.0	0.0	0.0	0.0	0.0
67	31	0.0	0.0	0.0	0.0	0.0	0.0
67	32	0.0	0.0	0.0	0.0	0.0	0.0
67	33	0.0	0.0	0.0	0.0	0.0	0.0
67	34	0.0	0.0	0.0	0.0	0.0	0.0
67	35	0.0	0.0	0.0	0.0	0.0	0.0
67	36	0.0	0.0	0.0	0.0	0.0	0.0
67	37	0.0	0.0	0.0	0.0	0.0	0.0
67	38	0.0	0.0	0.0	0.0	0.0	0.0
67	39	0.0	0.0	0.0	0.0	0.0	0.0
67	40	0.0	0.0	0.0	0.0	0.0	0.0
67	41	0.0	0.0	0.0	0.0	0.0	0.0
67	42	0.0	0.0	0.0	0.0	0.0	0.0
67	43	0.0	0.0	0.0	0.0	0.0	0.0
67	44	0.0	0.0	0.0	0.0	0.0	0.0
67	45	0.0	0.0	0.0	0.0	0.0	0.0
67	46	0.0	0.0	0.0	0.0	0.0	0.0
67	47	0.0	0.0	0.0	0.0	0.0	0.0
67	48	0.0	0.0	0.0	0.0	0.0	0.0
67	49	0.0	0.0	0.0	0.0	0.0	0.0
67	50	0.0	0.0	0.0	0.0	0.0	0.0
68	1	0.0	0.0	0.0	0.0	0.0	0.0
68	2	0.0	0.0	0.0	0.0	0.0	0.0
68	3	0.0	0.0	0.0	0.0	0.0	0.0
68	4	0.0	0.0	0.0	0.0	0.0	0.0
68	5	0.0	0.0	0.0	0.0	0.0	0.0
68	6	0.0	0.0	0.0	0.0	0.0	0.0
68	7	0.0	0.0	0.0	0.0	0.0	0.0
68	8	0.0	0.0	0.0	0.0	0.0	0.0
68	9	0.0	0.0	0.0	0.0	0.0	0.0
68	10	0.0	0.0	0.0	0.0	0.0	0.0
68	11	0.0	0.0	0.0	0.0	0.0	0.0
68	12	0.0	0.0	0.0	0.0	0.0	0.0
68	13	0.0	0.0	0.0	0.0	0.0	0.0
68	14	0.0	0.0	0.0	0.0	0.0	0.0
68	15	0.0	0.0	0.0	0.0	0.0	0.0
68	16	0.0	0.0	0.0	0.0	0.0	0.0
68	17	0.0	0.0	0.0	0.0	0.0	0.0

68	18	0.0	0.0	0.0	0.0	0.0	0.0
68	19	0.0	0.0	0.0	0.0	0.0	0.0
68	20	0.0	0.0	0.0	0.0	0.0	0.0
68	21	0.0	0.0	0.0	0.0	0.0	0.0
68	22	0.0	0.0	0.0	0.0	0.0	0.0
68	23	0.0	0.0	0.0	0.0	0.0	0.0
68	24	0.0	0.0	0.0	0.0	0.0	0.0
68	25	0.0	0.0	0.0	0.0	0.0	0.0
68	26	0.0	0.0	0.0	0.0	0.0	0.0
68	27	0.0	0.0	0.0	0.0	0.0	0.0
68	28	0.0	0.0	0.0	0.0	0.0	0.0
68	29	0.0	0.0	0.0	0.0	0.0	0.0
68	30	0.0	0.0	0.0	0.0	0.0	0.0
68	31	0.0	0.0	0.0	0.0	0.0	0.0
68	32	0.0	0.0	0.0	0.0	0.0	0.0
68	33	0.0	0.0	0.0	0.0	0.0	0.0
68	34	0.0	0.0	0.0	0.0	0.0	0.0
68	35	0.0	0.0	0.0	0.0	0.0	0.0
68	36	0.0	0.0	0.0	0.0	0.0	0.0
68	37	0.0	0.0	0.0	0.0	0.0	0.0
68	38	0.0	0.0	0.0	0.0	0.0	0.0
68	39	0.0	0.0	0.0	0.0	0.0	0.0
68	40	0.0	0.0	0.0	0.0	0.0	0.0
68	41	0.0	0.0	0.0	0.0	0.0	0.0
68	42	0.0	0.0	0.0	0.0	0.0	0.0
68	43	0.0	0.0	0.0	0.0	0.0	0.0
68	44	0.0	0.0	0.0	0.0	0.0	0.0
68	45	0.0	0.0	0.0	0.0	0.0	0.0
68	46	0.0	0.0	0.0	0.0	0.0	0.0
68	47	0.0	0.0	0.0	0.0	0.0	0.0
68	48	0.0	0.0	0.0	0.0	0.0	0.0
68	49	0.0	0.0	0.0	0.0	0.0	0.0
68	50	0.0	0.0	0.0	0.0	0.0	0.0
69	1	0.02	0.03	-0.02	-1.82e-04	1.38e-04	-3.20e-05
69	2	0.02	0.03	-0.02	-1.84e-04	1.39e-04	-3.18e-05
69	3	0.02	0.04	-0.02	-2.14e-04	1.44e-04	-2.79e-05
69	4	0.02	0.04	-0.02	-2.16e-04	1.45e-04	-2.78e-05
69	5	0.01	0.02	-0.01	-1.37e-04	1.00e-04	-2.36e-05
69	6	0.01	0.02	-0.01	-1.39e-04	1.01e-04	-2.35e-05
69	7	0.02	0.03	-0.01	-1.69e-04	1.06e-04	-1.95e-05
69	8	0.02	0.03	-0.01	-1.71e-04	1.07e-04	-1.94e-05
69	9	0.02	0.03	-0.02	-1.86e-04	1.40e-04	-3.17e-05
69	10	0.02	0.03	-0.02	-2.05e-04	1.42e-04	-2.91e-05
69	11	0.02	0.03	-0.02	-2.08e-04	1.44e-04	-2.88e-05
69	12	0.01	0.02	-0.01	-1.41e-04	1.02e-04	-2.33e-05
69	13	0.02	0.03	-0.01	-1.59e-04	1.04e-04	-2.08e-05
69	14	0.02	0.03	-0.01	-1.63e-04	1.06e-04	-2.04e-05
69	15	0.18	0.09	-0.01	-1.69e-04	2.67e-04	3.35e-05
69	16	0.20	6.76e-03	-0.02	-1.06e-04	2.91e-04	8.90e-06
69	17	-0.17	0.04	-8.26e-03	-1.94e-04	-8.60e-05	-5.29e-05
69	18	-0.15	-0.04	-0.01	-1.31e-04	-6.22e-05	-7.74e-05
69	19	0.19	0.10	-0.01	-1.79e-04	2.60e-04	2.63e-05
69	20	0.20	-7.23e-03	-0.02	-9.54e-05	2.99e-04	1.60e-05
69	21	-0.17	0.06	-7.37e-03	-2.04e-04	-9.36e-05	-6.00e-05
69	22	-0.16	-0.05	-0.01	-1.21e-04	-5.47e-05	-7.03e-05
69	23	0.21	0.12	-0.01	-2.11e-04	2.78e-04	-8.07e-05
69	24	0.23	0.04	-0.02	-1.48e-04	3.02e-04	-1.05e-04
69	25	-0.20	6.55e-03	-8.16e-03	-1.51e-04	-9.72e-05	6.12e-05
69	26	-0.18	-0.07	-0.01	-8.84e-05	-7.34e-05	3.67e-05
69	27	0.21	0.14	-0.01	-2.21e-04	2.71e-04	-8.78e-05
69	28	0.23	0.03	-0.02	-1.38e-04	3.10e-04	-9.81e-05
69	29	-0.20	0.02	-7.26e-03	-1.62e-04	-1.05e-04	5.41e-05
69	30	-0.18	-0.09	-0.01	-7.82e-05	-6.59e-05	4.38e-05
69	31	0.04	0.16	-4.86e-03	-2.51e-04	1.16e-04	3.19e-05
69	32	0.09	-0.10	-0.02	-4.12e-05	1.95e-04	-5.00e-05
69	33	-0.06	0.15	-3.83e-03	-2.58e-04	9.74e-06	5.99e-06
69	34	-0.01	-0.12	-0.02	-4.88e-05	8.93e-05	-7.59e-05
69	35	0.05	0.18	-4.89e-03	-2.64e-04	1.19e-04	-2.35e-06
69	36	0.10	-0.09	-0.02	-5.39e-05	1.99e-04	-8.42e-05
69	37	-0.07	0.14	-3.80e-03	-2.46e-04	6.38e-06	4.02e-05
69	38	-0.02	-0.13	-0.02	-3.60e-05	8.59e-05	-4.16e-05
69	39	0.04	0.21	-1.88e-03	-2.85e-04	9.06e-05	8.11e-06
69	40	0.09	-0.15	-0.02	-6.97e-06	2.20e-04	-2.62e-05
69	41	-0.06	0.20	-8.48e-04	-2.93e-04	-1.53e-05	-1.78e-05
69	42	-0.02	-0.16	-0.02	-1.45e-05	1.14e-04	-5.21e-05
69	43	0.05	0.22	-1.91e-03	-2.98e-04	9.40e-05	-2.61e-05
69	44	0.10	-0.14	-0.02	-1.97e-05	2.24e-04	-6.04e-05

69	45	-0.07	0.19	-8.17e-04	-2.80e-04	-1.87e-05	1.64e-05
69	46	-0.02	-0.17	-0.02	-1.79e-06	1.11e-04	-1.79e-05
69	47	-0.29	-0.04	-0.01	-1.81e-04	-1.82e-04	-9.27e-05
69	48	0.32	0.09	-0.01	-1.18e-04	3.87e-04	4.88e-05
69	49	0.02	-0.22	-0.03	4.21e-05	1.78e-04	-5.42e-05
69	50	5.78e-03	0.27	2.60e-03	-3.42e-04	2.74e-05	1.02e-05
70	1	0.0	0.0	0.0	0.0	0.0	0.0
70	2	0.0	0.0	0.0	0.0	0.0	0.0
70	3	0.0	0.0	0.0	0.0	0.0	0.0
70	4	0.0	0.0	0.0	0.0	0.0	0.0
70	5	0.0	0.0	0.0	0.0	0.0	0.0
70	6	0.0	0.0	0.0	0.0	0.0	0.0
70	7	0.0	0.0	0.0	0.0	0.0	0.0
70	8	0.0	0.0	0.0	0.0	0.0	0.0
70	9	0.0	0.0	0.0	0.0	0.0	0.0
70	10	0.0	0.0	0.0	0.0	0.0	0.0
70	11	0.0	0.0	0.0	0.0	0.0	0.0
70	12	0.0	0.0	0.0	0.0	0.0	0.0
70	13	0.0	0.0	0.0	0.0	0.0	0.0
70	14	0.0	0.0	0.0	0.0	0.0	0.0
70	15	0.0	0.0	0.0	0.0	0.0	0.0
70	16	0.0	0.0	0.0	0.0	0.0	0.0
70	17	0.0	0.0	0.0	0.0	0.0	0.0
70	18	0.0	0.0	0.0	0.0	0.0	0.0
70	19	0.0	0.0	0.0	0.0	0.0	0.0
70	20	0.0	0.0	0.0	0.0	0.0	0.0
70	21	0.0	0.0	0.0	0.0	0.0	0.0
70	22	0.0	0.0	0.0	0.0	0.0	0.0
70	23	0.0	0.0	0.0	0.0	0.0	0.0
70	24	0.0	0.0	0.0	0.0	0.0	0.0
70	25	0.0	0.0	0.0	0.0	0.0	0.0
70	26	0.0	0.0	0.0	0.0	0.0	0.0
70	27	0.0	0.0	0.0	0.0	0.0	0.0
70	28	0.0	0.0	0.0	0.0	0.0	0.0
70	29	0.0	0.0	0.0	0.0	0.0	0.0
70	30	0.0	0.0	0.0	0.0	0.0	0.0
70	31	0.0	0.0	0.0	0.0	0.0	0.0
70	32	0.0	0.0	0.0	0.0	0.0	0.0
70	33	0.0	0.0	0.0	0.0	0.0	0.0
70	34	0.0	0.0	0.0	0.0	0.0	0.0
70	35	0.0	0.0	0.0	0.0	0.0	0.0
70	36	0.0	0.0	0.0	0.0	0.0	0.0
70	37	0.0	0.0	0.0	0.0	0.0	0.0
70	38	0.0	0.0	0.0	0.0	0.0	0.0
70	39	0.0	0.0	0.0	0.0	0.0	0.0
70	40	0.0	0.0	0.0	0.0	0.0	0.0
70	41	0.0	0.0	0.0	0.0	0.0	0.0
70	42	0.0	0.0	0.0	0.0	0.0	0.0
70	43	0.0	0.0	0.0	0.0	0.0	0.0
70	44	0.0	0.0	0.0	0.0	0.0	0.0
70	45	0.0	0.0	0.0	0.0	0.0	0.0
70	46	0.0	0.0	0.0	0.0	0.0	0.0
70	47	0.0	0.0	0.0	0.0	0.0	0.0
70	48	0.0	0.0	0.0	0.0	0.0	0.0
70	49	0.0	0.0	0.0	0.0	0.0	0.0
70	50	0.0	0.0	0.0	0.0	0.0	0.0
71	1	0.0	0.0	0.0	0.0	0.0	0.0
71	2	0.0	0.0	0.0	0.0	0.0	0.0
71	3	0.0	0.0	0.0	0.0	0.0	0.0
71	4	0.0	0.0	0.0	0.0	0.0	0.0
71	5	0.0	0.0	0.0	0.0	0.0	0.0
71	6	0.0	0.0	0.0	0.0	0.0	0.0
71	7	0.0	0.0	0.0	0.0	0.0	0.0
71	8	0.0	0.0	0.0	0.0	0.0	0.0
71	9	0.0	0.0	0.0	0.0	0.0	0.0
71	10	0.0	0.0	0.0	0.0	0.0	0.0
71	11	0.0	0.0	0.0	0.0	0.0	0.0
71	12	0.0	0.0	0.0	0.0	0.0	0.0
71	13	0.0	0.0	0.0	0.0	0.0	0.0
71	14	0.0	0.0	0.0	0.0	0.0	0.0
71	15	0.0	0.0	0.0	0.0	0.0	0.0
71	16	0.0	0.0	0.0	0.0	0.0	0.0
71	17	0.0	0.0	0.0	0.0	0.0	0.0
71	18	0.0	0.0	0.0	0.0	0.0	0.0
71	19	0.0	0.0	0.0	0.0	0.0	0.0
71	20	0.0	0.0	0.0	0.0	0.0	0.0
71	21	0.0	0.0	0.0	0.0	0.0	0.0

71	22	0.0	0.0	0.0	0.0	0.0	0.0
71	23	0.0	0.0	0.0	0.0	0.0	0.0
71	24	0.0	0.0	0.0	0.0	0.0	0.0
71	25	0.0	0.0	0.0	0.0	0.0	0.0
71	26	0.0	0.0	0.0	0.0	0.0	0.0
71	27	0.0	0.0	0.0	0.0	0.0	0.0
71	28	0.0	0.0	0.0	0.0	0.0	0.0
71	29	0.0	0.0	0.0	0.0	0.0	0.0
71	30	0.0	0.0	0.0	0.0	0.0	0.0
71	31	0.0	0.0	0.0	0.0	0.0	0.0
71	32	0.0	0.0	0.0	0.0	0.0	0.0
71	33	0.0	0.0	0.0	0.0	0.0	0.0
71	34	0.0	0.0	0.0	0.0	0.0	0.0
71	35	0.0	0.0	0.0	0.0	0.0	0.0
71	36	0.0	0.0	0.0	0.0	0.0	0.0
71	37	0.0	0.0	0.0	0.0	0.0	0.0
71	38	0.0	0.0	0.0	0.0	0.0	0.0
71	39	0.0	0.0	0.0	0.0	0.0	0.0
71	40	0.0	0.0	0.0	0.0	0.0	0.0
71	41	0.0	0.0	0.0	0.0	0.0	0.0
71	42	0.0	0.0	0.0	0.0	0.0	0.0
71	43	0.0	0.0	0.0	0.0	0.0	0.0
71	44	0.0	0.0	0.0	0.0	0.0	0.0
71	45	0.0	0.0	0.0	0.0	0.0	0.0
71	46	0.0	0.0	0.0	0.0	0.0	0.0
71	47	0.0	0.0	0.0	0.0	0.0	0.0
71	48	0.0	0.0	0.0	0.0	0.0	0.0
71	49	0.0	0.0	0.0	0.0	0.0	0.0
71	50	0.0	0.0	0.0	0.0	0.0	0.0
72	1	0.0	0.0	0.0	0.0	0.0	0.0
72	2	0.0	0.0	0.0	0.0	0.0	0.0
72	3	0.0	0.0	0.0	0.0	0.0	0.0
72	4	0.0	0.0	0.0	0.0	0.0	0.0
72	5	0.0	0.0	0.0	0.0	0.0	0.0
72	6	0.0	0.0	0.0	0.0	0.0	0.0
72	7	0.0	0.0	0.0	0.0	0.0	0.0
72	8	0.0	0.0	0.0	0.0	0.0	0.0
72	9	0.0	0.0	0.0	0.0	0.0	0.0
72	10	0.0	0.0	0.0	0.0	0.0	0.0
72	11	0.0	0.0	0.0	0.0	0.0	0.0
72	12	0.0	0.0	0.0	0.0	0.0	0.0
72	13	0.0	0.0	0.0	0.0	0.0	0.0
72	14	0.0	0.0	0.0	0.0	0.0	0.0
72	15	0.0	0.0	0.0	0.0	0.0	0.0
72	16	0.0	0.0	0.0	0.0	0.0	0.0
72	17	0.0	0.0	0.0	0.0	0.0	0.0
72	18	0.0	0.0	0.0	0.0	0.0	0.0
72	19	0.0	0.0	0.0	0.0	0.0	0.0
72	20	0.0	0.0	0.0	0.0	0.0	0.0
72	21	0.0	0.0	0.0	0.0	0.0	0.0
72	22	0.0	0.0	0.0	0.0	0.0	0.0
72	23	0.0	0.0	0.0	0.0	0.0	0.0
72	24	0.0	0.0	0.0	0.0	0.0	0.0
72	25	0.0	0.0	0.0	0.0	0.0	0.0
72	26	0.0	0.0	0.0	0.0	0.0	0.0
72	27	0.0	0.0	0.0	0.0	0.0	0.0
72	28	0.0	0.0	0.0	0.0	0.0	0.0
72	29	0.0	0.0	0.0	0.0	0.0	0.0
72	30	0.0	0.0	0.0	0.0	0.0	0.0
72	31	0.0	0.0	0.0	0.0	0.0	0.0
72	32	0.0	0.0	0.0	0.0	0.0	0.0
72	33	0.0	0.0	0.0	0.0	0.0	0.0
72	34	0.0	0.0	0.0	0.0	0.0	0.0
72	35	0.0	0.0	0.0	0.0	0.0	0.0
72	36	0.0	0.0	0.0	0.0	0.0	0.0
72	37	0.0	0.0	0.0	0.0	0.0	0.0
72	38	0.0	0.0	0.0	0.0	0.0	0.0
72	39	0.0	0.0	0.0	0.0	0.0	0.0
72	40	0.0	0.0	0.0	0.0	0.0	0.0
72	41	0.0	0.0	0.0	0.0	0.0	0.0
72	42	0.0	0.0	0.0	0.0	0.0	0.0
72	43	0.0	0.0	0.0	0.0	0.0	0.0
72	44	0.0	0.0	0.0	0.0	0.0	0.0
72	45	0.0	0.0	0.0	0.0	0.0	0.0
72	46	0.0	0.0	0.0	0.0	0.0	0.0
72	47	0.0	0.0	0.0	0.0	0.0	0.0
72	48	0.0	0.0	0.0	0.0	0.0	0.0

72	49	0.0	0.0	0.0	0.0	0.0	0.0
72	50	0.0	0.0	0.0	0.0	0.0	0.0
73	1	4.00e-06	7.92e-04	-6.55e-03	-1.15e-04	2.56e-05	2.11e-06
73	2	1.98e-06	7.85e-04	-6.57e-03	-1.16e-04	2.57e-05	2.05e-06
73	3	2.43e-05	9.55e-04	-7.24e-03	-1.30e-04	2.83e-05	2.93e-06
73	4	2.23e-05	9.47e-04	-7.26e-03	-1.31e-04	2.84e-05	2.88e-06
73	5	2.78e-06	5.98e-04	-4.92e-03	-8.63e-05	1.92e-05	1.58e-06
73	6	0.0	5.90e-04	-4.93e-03	-8.68e-05	1.93e-05	1.53e-06
73	7	2.31e-05	7.60e-04	-5.61e-03	-1.01e-04	2.18e-05	2.41e-06
73	8	2.11e-05	7.53e-04	-5.63e-03	-1.02e-04	2.19e-05	2.35e-06
73	9	0.0	7.78e-04	-6.59e-03	-1.16e-04	2.58e-05	2.00e-06
73	10	1.82e-05	9.06e-04	-7.03e-03	-1.26e-04	2.75e-05	2.68e-06
73	11	1.42e-05	8.91e-04	-7.07e-03	-1.27e-04	2.76e-05	2.58e-06
73	12	-1.25e-06	5.83e-04	-4.95e-03	-8.74e-05	1.93e-05	1.47e-06
73	13	1.70e-05	7.11e-04	-5.40e-03	-9.69e-05	2.10e-05	2.16e-06
73	14	1.30e-05	6.97e-04	-5.44e-03	-9.80e-05	2.12e-05	2.05e-06
73	15	5.07e-04	-6.26e-03	-5.81e-03	-9.34e-05	2.75e-05	-3.24e-05
73	16	1.99e-04	-0.01	-7.67e-03	-5.93e-05	3.73e-05	-5.92e-05
73	17	-1.77e-04	0.01	-2.71e-03	-1.25e-04	3.19e-06	6.30e-05
73	18	-4.85e-04	7.58e-03	-4.57e-03	-9.13e-05	1.30e-05	3.62e-05
73	19	4.70e-04	-7.22e-03	-6.01e-03	-8.92e-05	2.85e-05	-3.71e-05
73	20	2.35e-04	-0.01	-7.48e-03	-6.35e-05	3.64e-05	-5.44e-05
73	21	-2.13e-04	0.01	-2.90e-03	-1.21e-04	4.12e-06	5.82e-05
73	22	-4.49e-04	8.54e-03	-4.38e-03	-9.55e-05	1.20e-05	4.10e-05
73	23	5.34e-04	-0.01	-6.67e-03	-7.82e-05	3.29e-05	-5.55e-05
73	24	2.26e-04	-0.02	-8.52e-03	-4.41e-05	4.27e-05	-8.23e-05
73	25	-2.04e-04	0.02	-1.86e-03	-1.41e-04	-2.18e-06	8.61e-05
73	26	-5.12e-04	0.01	-3.72e-03	-1.07e-04	7.59e-06	5.93e-05
73	27	4.98e-04	-0.01	-6.86e-03	-7.40e-05	3.38e-05	-6.02e-05
73	28	2.62e-04	-0.02	-8.33e-03	-4.83e-05	4.17e-05	-7.75e-05
73	29	-2.40e-04	0.02	-2.05e-03	-1.36e-04	-1.25e-06	8.14e-05
73	30	-4.76e-04	0.01	-3.52e-03	-1.11e-04	6.66e-06	6.41e-05
73	31	6.27e-04	6.70e-03	-2.57e-03	-1.44e-04	7.61e-06	3.23e-05
73	32	-4.00e-04	-0.01	-8.75e-03	-3.08e-05	4.02e-05	-5.71e-05
73	33	4.22e-04	0.01	-1.64e-03	-1.54e-04	0.0	6.09e-05
73	34	-6.05e-04	-5.37e-03	-7.82e-03	-4.04e-05	3.29e-05	-2.84e-05
73	35	6.35e-04	5.31e-03	-2.82e-03	-1.40e-04	9.23e-06	2.53e-05
73	36	-3.92e-04	-0.01	-9.00e-03	-2.62e-05	4.18e-05	-6.40e-05
73	37	4.14e-04	0.01	-1.38e-03	-1.59e-04	-1.30e-06	6.78e-05
73	38	-6.13e-04	-3.98e-03	-7.56e-03	-4.49e-05	3.13e-05	-2.15e-05
73	39	5.06e-04	3.50e-03	-3.20e-03	-1.30e-04	1.07e-05	1.64e-05
73	40	-2.79e-04	-7.93e-03	-8.11e-03	-4.46e-05	3.71e-05	-4.12e-05
73	41	3.01e-04	9.26e-03	-2.27e-03	-1.40e-04	3.42e-06	4.50e-05
73	42	-4.84e-04	-2.18e-03	-7.18e-03	-5.42e-05	2.98e-05	-1.26e-05
73	43	5.14e-04	2.11e-03	-3.46e-03	-1.26e-04	1.23e-05	9.48e-06
73	44	-2.71e-04	-9.32e-03	-8.37e-03	-4.01e-05	3.87e-05	-4.81e-05
73	45	2.93e-04	0.01	-2.02e-03	-1.45e-04	1.81e-06	5.20e-05
73	46	-4.92e-04	-7.86e-04	-6.93e-03	-5.88e-05	2.82e-05	-5.66e-06
73	47	-5.30e-04	0.02	-2.00e-03	-1.31e-04	-3.58e-06	9.71e-05
73	48	5.52e-04	-0.02	-8.39e-03	-5.37e-05	4.41e-05	-9.33e-05
73	49	-7.11e-04	-0.01	-9.59e-03	-1.31e-05	4.35e-05	-5.42e-05
73	50	7.33e-04	0.01	-7.94e-04	-1.72e-04	-2.97e-06	5.80e-05
74	1	7.49e-03	0.01	-0.04	-2.38e-04	5.28e-05	-2.41e-05
74	2	7.55e-03	0.01	-0.04	-2.39e-04	5.24e-05	-2.43e-05
74	3	9.93e-03	0.01	-0.04	-3.62e-04	7.46e-05	-4.22e-05
74	4	9.98e-03	0.01	-0.05	-3.63e-04	7.43e-05	-4.24e-05
74	5	5.42e-03	7.56e-03	-0.03	-1.73e-04	3.86e-05	-1.77e-05
74	6	5.47e-03	7.55e-03	-0.03	-1.73e-04	3.83e-05	-1.79e-05
74	7	7.85e-03	0.01	-0.04	-2.97e-04	6.05e-05	-3.57e-05
74	8	7.91e-03	0.01	-0.04	-2.97e-04	6.01e-05	-3.59e-05
74	9	7.60e-03	0.01	-0.04	-2.39e-04	5.20e-05	-2.46e-05
74	10	9.20e-03	0.01	-0.04	-3.25e-04	6.81e-05	-3.68e-05
74	11	9.31e-03	0.01	-0.04	-3.26e-04	6.73e-05	-3.72e-05
74	12	5.53e-03	7.54e-03	-0.03	-1.73e-04	3.79e-05	-1.81e-05
74	13	7.12e-03	9.61e-03	-0.03	-2.60e-04	5.39e-05	-3.03e-05
74	14	7.23e-03	9.60e-03	-0.03	-2.60e-04	5.32e-05	-3.07e-05
74	15	0.09	0.03	-0.04	-2.88e-04	2.16e-04	-5.99e-05
74	16	0.07	-0.03	-0.03	-1.33e-04	1.74e-04	-6.34e-05
74	17	-0.06	0.04	-0.03	-3.12e-04	-7.94e-05	1.36e-05
74	18	-0.08	-0.01	-0.02	-1.57e-04	-1.21e-04	1.00e-05
74	19	0.07	0.03	-0.03	-2.83e-04	1.82e-04	-5.93e-05
74	20	0.09	-0.02	-0.03	-1.38e-04	2.08e-04	-6.39e-05
74	21	-0.08	0.04	-0.03	-3.07e-04	-1.13e-04	1.41e-05
74	22	-0.06	-0.01	-0.03	-1.62e-04	-8.73e-05	9.51e-06
74	23	0.07	0.02	-0.03	-2.65e-04	1.66e-04	-6.16e-05
74	24	0.05	-0.03	-0.03	-1.10e-04	1.24e-04	-6.51e-05
74	25	-0.03	0.05	-0.03	-3.35e-04	-2.92e-05	1.52e-05

74	26	-0.05	-6.09e-03	-0.03	-1.80e-04	-7.11e-05	1.17e-05
74	27	0.05	0.02	-0.03	-2.60e-04	1.32e-04	-6.10e-05
74	28	0.06	-0.03	-0.03	-1.15e-04	1.58e-04	-6.56e-05
74	29	-0.05	0.05	-0.03	-3.30e-04	-6.31e-05	1.58e-05
74	30	-0.04	-3.97e-03	-0.03	-1.85e-04	-3.72e-05	1.12e-05
74	31	0.06	0.10	-0.04	-4.78e-04	1.61e-04	-3.01e-05
74	32	-3.34e-03	-0.09	-0.02	4.01e-05	2.20e-05	-4.18e-05
74	33	0.02	0.11	-0.04	-4.85e-04	7.28e-05	-8.06e-06
74	34	-0.05	-0.09	-0.02	3.30e-05	-6.66e-05	-1.97e-05
74	35	0.05	0.10	-0.04	-4.71e-04	1.46e-04	-3.06e-05
74	36	-0.01	-0.09	-0.02	4.71e-05	6.92e-06	-4.23e-05
74	37	0.02	0.11	-0.04	-4.92e-04	8.78e-05	-7.55e-06
74	38	-0.04	-0.08	-0.02	2.60e-05	-5.16e-05	-1.92e-05
74	39	5.45e-03	0.10	-0.04	-4.60e-04	4.84e-05	-2.83e-05
74	40	0.05	-0.08	-0.02	2.25e-05	1.35e-04	-4.36e-05
74	41	-0.04	0.10	-0.04	-4.67e-04	-4.02e-05	-6.27e-06
74	42	7.33e-03	-0.08	-0.02	1.53e-05	4.63e-05	-2.15e-05
74	43	-2.08e-03	0.09	-0.04	-4.53e-04	3.34e-05	-2.88e-05
74	44	0.04	-0.08	-0.02	2.94e-05	1.20e-04	-4.41e-05
74	45	-0.03	0.10	-0.04	-4.74e-04	-2.51e-05	-5.77e-06
74	46	0.01	-0.08	-0.02	8.34e-06	6.14e-05	-2.10e-05
74	47	-0.08	0.02	-0.03	-2.61e-04	-1.24e-04	3.30e-05
74	48	0.09	-6.70e-03	-0.03	-1.84e-04	2.18e-04	-8.29e-05
74	49	0.02	-0.14	-0.02	1.77e-04	2.21e-05	-2.81e-05
74	50	-3.28e-03	0.16	-0.04	-6.22e-04	7.26e-05	-2.17e-05
75	1	0.02	0.03	-0.02	-6.02e-05	8.78e-05	3.40e-06
75	2	0.02	0.03	-0.02	-6.07e-05	8.80e-05	3.45e-06
75	3	0.02	0.04	-0.02	-7.40e-05	8.86e-05	7.04e-06
75	4	0.02	0.04	-0.02	-7.45e-05	8.89e-05	7.09e-06
75	5	0.01	0.02	-0.02	-4.42e-05	6.16e-05	2.17e-06
75	6	0.01	0.02	-0.02	-4.48e-05	6.19e-05	2.22e-06
75	7	0.02	0.03	-0.02	-5.81e-05	6.24e-05	5.81e-06
75	8	0.02	0.03	-0.02	-5.86e-05	6.27e-05	5.86e-06
75	9	0.02	0.03	-0.02	-6.12e-05	8.83e-05	3.49e-06
75	10	0.02	0.03	-0.02	-6.99e-05	8.84e-05	5.95e-06
75	11	0.02	0.03	-0.02	-7.09e-05	8.89e-05	6.04e-06
75	12	0.01	0.02	-0.02	-4.53e-05	6.21e-05	2.26e-06
75	13	0.02	0.03	-0.02	-5.39e-05	6.22e-05	4.72e-06
75	14	0.02	0.03	-0.02	-5.50e-05	6.27e-05	4.81e-06
75	15	0.18	0.08	-0.02	-1.04e-04	3.53e-04	9.85e-05
75	16	0.20	-2.53e-03	-0.02	6.49e-05	3.77e-04	6.56e-05
75	17	-0.17	0.05	-0.02	-1.64e-04	-2.54e-04	-5.83e-05
75	18	-0.15	-0.03	-0.01	4.55e-06	-2.29e-04	-9.12e-05
75	19	0.19	0.09	-0.02	-1.21e-04	3.75e-04	8.90e-05
75	20	0.20	-0.02	-0.01	8.18e-05	3.55e-04	7.51e-05
75	21	-0.17	0.06	-0.02	-1.81e-04	-2.31e-04	-6.78e-05
75	22	-0.16	-0.04	-0.01	2.14e-05	-2.51e-04	-8.18e-05
75	23	0.21	0.10	-0.02	-2.09e-04	3.38e-04	-4.81e-05
75	24	0.23	0.01	-0.02	-3.97e-05	3.63e-04	-8.10e-05
75	25	-0.20	0.03	-0.02	-5.99e-05	-2.39e-04	8.82e-05
75	26	-0.18	-0.05	-0.01	1.09e-04	-2.14e-04	5.53e-05
75	27	0.21	0.11	-0.02	-2.26e-04	3.60e-04	-5.76e-05
75	28	0.23	6.31e-04	-0.02	-2.28e-05	3.41e-04	-7.15e-05
75	29	-0.20	0.05	-0.02	-7.67e-05	-2.17e-04	7.88e-05
75	30	-0.18	-0.06	-0.01	1.26e-04	-2.36e-04	6.48e-05
75	31	0.04	0.16	-0.02	-3.22e-04	1.11e-04	8.20e-05
75	32	0.09	-0.11	-8.40e-03	2.41e-04	1.94e-04	-2.77e-05
75	33	-0.06	0.16	-0.02	-3.40e-04	-7.04e-05	3.50e-05
75	34	-0.01	-0.12	-7.63e-03	2.23e-04	1.24e-05	-7.48e-05
75	35	0.05	0.17	-0.03	-3.54e-04	1.07e-04	3.80e-05
75	36	0.10	-0.10	-8.89e-03	2.10e-04	1.90e-04	-7.17e-05
75	37	-0.07	0.15	-0.02	-3.09e-04	-6.60e-05	7.89e-05
75	38	-0.02	-0.12	-7.14e-03	2.54e-04	1.68e-05	-3.08e-05
75	39	0.04	0.21	-0.03	-3.79e-04	1.85e-04	5.04e-05
75	40	0.09	-0.15	-6.95e-03	2.97e-04	1.20e-04	3.88e-06
75	41	-0.06	0.20	-0.03	-3.97e-04	3.60e-06	3.37e-06
75	42	-0.02	-0.16	-6.18e-03	2.79e-04	-6.16e-05	-4.32e-05
75	43	0.05	0.21	-0.03	-4.10e-04	1.81e-04	6.44e-06
75	44	0.10	-0.15	-7.44e-03	2.66e-04	1.16e-04	-4.01e-05
75	45	-0.07	0.19	-0.02	-3.65e-04	8.00e-06	4.73e-05
75	46	-0.02	-0.16	-5.69e-03	3.10e-04	-5.72e-05	0.0
75	47	-0.29	-0.01	-0.01	2.51e-05	-3.97e-04	-7.73e-05
75	48	0.32	0.06	-0.02	-1.25e-04	5.21e-04	8.45e-05
75	49	0.02	-0.23	-2.12e-03	4.40e-04	8.02e-05	-3.14e-05
75	50	5.63e-03	0.27	-0.03	-5.40e-04	4.37e-05	3.87e-05
76	1	0.02	0.03	-0.03	-1.67e-04	5.93e-05	2.49e-05
76	2	0.02	0.03	-0.03	-1.68e-04	5.96e-05	2.49e-05

76	3	0.02	0.04	-0.03	-1.81e-04	6.09e-05	2.72e-05
76	4	0.02	0.04	-0.03	-1.81e-04	6.12e-05	2.73e-05
76	5	0.01	0.02	-0.02	-1.21e-04	4.19e-05	1.72e-05
76	6	0.01	0.02	-0.02	-1.21e-04	4.22e-05	1.73e-05
76	7	0.02	0.03	-0.02	-1.34e-04	4.35e-05	1.96e-05
76	8	0.02	0.03	-0.02	-1.35e-04	4.38e-05	1.97e-05
76	9	0.02	0.03	-0.03	-1.68e-04	5.98e-05	2.50e-05
76	10	0.02	0.04	-0.03	-1.77e-04	6.04e-05	2.65e-05
76	11	0.02	0.04	-0.03	-1.78e-04	6.09e-05	2.67e-05
76	12	0.01	0.02	-0.02	-1.22e-04	4.25e-05	1.74e-05
76	13	0.02	0.03	-0.02	-1.30e-04	4.31e-05	1.89e-05
76	14	0.02	0.03	-0.02	-1.32e-04	4.36e-05	1.90e-05
76	15	0.18	0.08	-0.03	-2.00e-04	3.49e-04	4.76e-05
76	16	0.20	-9.91e-03	-0.03	-2.06e-05	3.74e-04	2.33e-05
76	17	-0.17	0.06	-0.02	-2.32e-04	-2.89e-04	1.30e-05
76	18	-0.15	-0.03	-0.01	-5.25e-05	-2.63e-04	-1.12e-05
76	19	0.18	0.09	-0.03	-2.12e-04	3.71e-04	2.95e-05
76	20	0.20	-0.02	-0.03	-8.57e-06	3.52e-04	4.14e-05
76	21	-0.17	0.07	-0.02	-2.44e-04	-2.67e-04	-5.05e-06
76	22	-0.16	-0.03	-0.01	-4.05e-05	-2.86e-04	6.85e-06
76	23	0.21	0.09	-0.03	-2.56e-04	3.39e-04	-1.36e-05
76	24	0.23	-5.26e-04	-0.03	-7.65e-05	3.65e-04	-3.79e-05
76	25	-0.20	0.05	-0.02	-1.76e-04	-2.80e-04	7.42e-05
76	26	-0.18	-0.04	-0.01	3.35e-06	-2.54e-04	5.00e-05
76	27	0.21	0.10	-0.03	-2.68e-04	3.62e-04	-3.17e-05
76	28	0.23	-6.11e-03	-0.03	-6.44e-05	3.42e-04	-1.98e-05
76	29	-0.20	0.06	-0.02	-1.88e-04	-2.57e-04	5.61e-05
76	30	-0.18	-0.04	-0.01	1.54e-05	-2.77e-04	6.80e-05
76	31	0.04	0.18	-0.03	-4.20e-04	9.55e-05	6.38e-05
76	32	0.09	-0.12	-0.02	1.77e-04	1.81e-04	-1.71e-05
76	33	-0.07	0.18	-0.03	-4.30e-04	-9.58e-05	5.34e-05
76	34	-0.01	-0.13	-0.02	1.68e-04	-1.04e-05	-2.74e-05
76	35	0.05	0.18	-0.03	-4.37e-04	9.27e-05	4.54e-05
76	36	0.10	-0.12	-0.02	1.61e-04	1.78e-04	-3.54e-05
76	37	-0.07	0.17	-0.03	-4.13e-04	-9.30e-05	7.18e-05
76	38	-0.02	-0.13	-0.02	1.84e-04	-7.60e-06	-9.07e-06
76	39	0.04	0.20	-0.03	-4.60e-04	1.70e-04	3.54e-06
76	40	0.09	-0.14	-0.02	2.17e-04	1.06e-04	4.32e-05
76	41	-0.06	0.19	-0.03	-4.70e-04	-2.08e-05	-6.83e-06
76	42	-0.02	-0.14	-0.02	2.08e-04	-8.54e-05	3.28e-05
76	43	0.05	0.20	-0.03	-4.77e-04	1.68e-04	-1.48e-05
76	44	0.10	-0.14	-0.02	2.01e-04	1.03e-04	2.48e-05
76	45	-0.07	0.19	-0.03	-4.53e-04	-1.80e-05	1.15e-05
76	46	-0.03	-0.15	-0.02	2.25e-04	-8.26e-05	5.12e-05
76	47	-0.29	6.38e-03	-0.01	-8.27e-05	-4.45e-04	6.12e-05
76	48	0.31	0.05	-0.03	-1.70e-04	5.31e-04	-2.48e-05
76	49	0.02	-0.23	-0.02	3.81e-04	5.72e-05	0.0
76	50	4.90e-03	0.28	-0.03	-6.33e-04	2.79e-05	3.72e-05
77	1	8.26e-03	0.01	-0.01	-9.34e-05	1.22e-05	1.72e-05
77	2	8.38e-03	0.01	-0.01	-9.35e-05	1.24e-05	1.72e-05
77	3	0.01	0.01	-0.01	-1.16e-04	1.96e-05	2.29e-05
77	4	0.01	0.01	-0.01	-1.17e-04	1.98e-05	2.29e-05
77	5	5.98e-03	7.97e-03	-8.74e-03	-6.87e-05	7.80e-06	1.21e-05
77	6	6.10e-03	8.00e-03	-8.81e-03	-6.88e-05	8.04e-06	1.21e-05
77	7	8.14e-03	0.01	-0.01	-9.17e-05	1.52e-05	1.78e-05
77	8	8.26e-03	0.01	-0.01	-9.18e-05	1.54e-05	1.78e-05
77	9	8.50e-03	0.01	-0.01	-9.37e-05	1.27e-05	1.72e-05
77	10	9.78e-03	0.01	-0.01	-1.09e-04	1.74e-05	2.12e-05
77	11	0.01	0.01	-0.01	-1.10e-04	1.78e-05	2.12e-05
77	12	6.22e-03	8.04e-03	-8.88e-03	-6.90e-05	8.27e-06	1.20e-05
77	13	7.49e-03	9.87e-03	-9.77e-03	-8.48e-05	1.30e-05	1.61e-05
77	14	7.73e-03	9.94e-03	-9.91e-03	-8.51e-05	1.34e-05	1.60e-05
77	15	0.09	0.03	7.12e-04	-1.29e-04	3.03e-04	-1.21e-04
77	16	0.07	-0.04	8.95e-03	8.04e-05	2.40e-04	-2.25e-05
77	17	-0.06	0.05	-0.03	-2.36e-04	-2.19e-04	5.13e-05
77	18	-0.08	-8.02e-03	-0.02	-2.64e-05	-2.82e-04	1.50e-04
77	19	0.07	0.02	-6.93e-05	-1.07e-04	2.45e-04	-9.99e-05
77	20	0.09	-0.03	9.73e-03	5.83e-05	2.98e-04	-4.37e-05
77	21	-0.07	0.05	-0.03	-2.14e-04	-2.77e-04	7.24e-05
77	22	-0.06	-1.12e-03	-0.02	-4.85e-05	-2.24e-04	1.29e-04
77	23	0.07	4.50e-03	-1.92e-03	-5.79e-05	2.15e-04	-1.01e-04
77	24	0.05	-0.06	6.32e-03	1.52e-04	1.52e-04	-2.06e-06
77	25	-0.03	0.07	-0.02	-3.08e-04	-1.31e-04	3.08e-05
77	26	-0.05	0.01	-0.02	-9.78e-05	-1.94e-04	1.29e-04
77	27	0.05	-2.41e-03	-2.70e-03	-3.58e-05	1.57e-04	-7.94e-05
77	28	0.06	-0.05	7.10e-03	1.30e-04	2.10e-04	-2.32e-05
77	29	-0.05	0.07	-0.03	-2.85e-04	-1.89e-04	5.19e-05

77	30	-0.04	0.02	-0.02	-1.20e-04	-1.36e-04	1.08e-04
77	31	0.06	0.11	-0.02	-4.11e-04	1.94e-04	-1.76e-04
77	32	-3.61e-03	-0.10	8.65e-03	2.88e-04	-1.60e-05	1.53e-04
77	33	0.02	0.12	-0.03	-4.43e-04	3.75e-05	-1.24e-04
77	34	-0.05	-0.09	1.56e-04	2.56e-04	-1.73e-04	2.04e-04
77	35	0.05	0.10	-0.02	-3.90e-04	1.68e-04	-1.69e-04
77	36	-0.01	-0.10	7.86e-03	3.09e-04	-4.24e-05	1.59e-04
77	37	0.02	0.12	-0.03	-4.65e-04	6.39e-05	-1.30e-04
77	38	-0.04	-0.08	9.45e-04	2.34e-04	-1.46e-04	1.98e-04
77	39	6.32e-03	0.08	-0.02	-3.38e-04	0.0	-1.05e-04
77	40	0.05	-0.07	0.01	2.14e-04	1.77e-04	8.21e-05
77	41	-0.04	0.09	-0.03	-3.70e-04	-1.56e-04	-5.34e-05
77	42	7.36e-03	-0.07	2.76e-03	1.82e-04	2.06e-05	1.34e-04
77	43	-1.12e-03	0.08	-0.02	-3.16e-04	-2.55e-05	-9.90e-05
77	44	0.04	-0.08	0.01	2.35e-04	1.51e-04	8.83e-05
77	45	-0.03	0.10	-0.03	-3.91e-04	-1.29e-04	-5.96e-05
77	46	0.01	-0.06	3.55e-03	1.61e-04	4.70e-05	1.28e-04
77	47	-0.08	0.05	-0.03	-2.25e-04	-2.94e-04	1.08e-04
77	48	0.09	-0.03	0.01	6.94e-05	3.16e-04	-7.93e-05
77	49	-3.38e-03	-0.14	0.01	4.21e-04	4.08e-05	2.16e-04
77	50	0.02	0.15	-0.03	-5.77e-04	-1.93e-05	-1.87e-04
78	1	6.25e-03	9.20e-03	-0.04	2.59e-05	8.47e-05	9.03e-06
78	2	6.28e-03	9.19e-03	-0.04	2.63e-05	8.49e-05	9.00e-06
78	3	8.47e-03	0.01	-0.04	5.63e-05	1.22e-04	2.60e-05
78	4	8.50e-03	0.01	-0.04	5.68e-05	1.22e-04	2.60e-05
78	5	4.51e-03	6.80e-03	-0.03	1.80e-05	6.09e-05	6.18e-06
78	6	4.54e-03	6.79e-03	-0.03	1.85e-05	6.11e-05	6.15e-06
78	7	6.73e-03	9.04e-03	-0.03	4.85e-05	9.80e-05	2.32e-05
78	8	6.76e-03	9.03e-03	-0.03	4.89e-05	9.82e-05	2.32e-05
78	9	6.31e-03	9.18e-03	-0.04	2.68e-05	8.50e-05	8.97e-06
78	10	7.81e-03	0.01	-0.04	4.72e-05	1.11e-04	2.09e-05
78	11	7.87e-03	0.01	-0.04	4.81e-05	1.11e-04	2.09e-05
78	12	4.57e-03	6.78e-03	-0.03	1.89e-05	6.13e-05	6.12e-06
78	13	6.06e-03	8.37e-03	-0.03	3.93e-05	8.69e-05	1.81e-05
78	14	6.13e-03	8.35e-03	-0.03	4.02e-05	8.72e-05	1.80e-05
78	15	0.08	0.04	-0.03	-3.65e-06	2.34e-04	2.94e-05
78	16	0.09	-0.01	-0.03	7.83e-05	2.59e-04	1.74e-05
78	17	-0.08	0.03	-0.03	-1.78e-05	-1.07e-04	8.55e-06
78	18	-0.07	-0.02	-0.02	6.41e-05	-8.22e-05	-3.40e-06
78	19	0.08	0.04	-0.03	-8.89e-06	2.35e-04	1.84e-05
78	20	0.09	-0.02	-0.03	8.35e-05	2.57e-04	2.84e-05
78	21	-0.08	0.03	-0.03	-2.31e-05	-1.06e-04	-2.44e-06
78	22	-0.07	-0.03	-0.02	6.93e-05	-8.38e-05	7.59e-06
78	23	0.06	0.04	-0.03	-2.83e-05	1.90e-04	-7.49e-06
78	24	0.07	-7.66e-03	-0.03	5.36e-05	2.15e-04	-1.94e-05
78	25	-0.06	0.02	-0.03	6.78e-06	-6.34e-05	4.54e-05
78	26	-0.05	-0.03	-0.02	8.87e-05	-3.83e-05	3.35e-05
78	27	0.06	0.05	-0.03	-3.35e-05	1.91e-04	-1.85e-05
78	28	0.07	-0.01	-0.03	5.89e-05	2.13e-04	-8.45e-06
78	29	-0.06	0.03	-0.03	1.54e-06	-6.18e-05	3.44e-05
78	30	-0.05	-0.03	-0.02	9.39e-05	-3.99e-05	4.45e-05
78	31	9.77e-03	0.09	-0.03	-1.04e-04	8.51e-05	3.60e-05
78	32	0.05	-0.08	-0.03	1.69e-04	1.69e-04	-3.81e-06
78	33	-0.04	0.09	-0.03	-1.08e-04	-1.72e-05	2.98e-05
78	34	1.02e-03	-0.08	-0.02	1.65e-04	6.64e-05	-1.01e-05
78	35	3.36e-03	0.10	-0.03	-1.12e-04	7.20e-05	2.50e-05
78	36	0.04	-0.07	-0.03	1.61e-04	1.56e-04	-1.49e-05
78	37	-0.03	0.09	-0.03	-1.01e-04	-4.00e-06	4.08e-05
78	38	7.43e-03	-0.08	-0.02	1.72e-04	7.96e-05	1.01e-06
78	39	0.01	0.10	-0.03	-1.22e-04	9.04e-05	0.0
78	40	0.05	-0.09	-0.03	1.86e-04	1.63e-04	3.28e-05
78	41	-0.04	0.10	-0.03	-1.26e-04	-1.19e-05	-6.86e-06
78	42	-2.91e-03	-0.09	-0.02	1.82e-04	6.11e-05	2.66e-05
78	43	7.29e-03	0.11	-0.03	-1.29e-04	7.72e-05	-1.17e-05
78	44	0.04	-0.08	-0.03	1.79e-04	1.50e-04	2.18e-05
78	45	-0.03	0.10	-0.03	-1.19e-04	1.29e-06	4.20e-06
78	46	3.50e-03	-0.09	-0.02	1.89e-04	7.43e-05	3.76e-05
78	47	-0.10	-4.45e-03	-0.02	4.98e-05	-1.45e-04	-1.35e-05
78	48	0.11	0.02	-0.04	1.06e-05	2.96e-04	3.94e-05
78	49	0.01	-0.13	-0.02	2.61e-04	8.84e-05	7.68e-06
78	50	-6.19e-04	0.15	-0.03	-2.00e-04	6.31e-05	1.83e-05
79	1	6.92e-03	9.82e-03	-0.03	2.26e-05	6.91e-05	3.29e-05
79	2	6.96e-03	9.81e-03	-0.04	2.30e-05	6.92e-05	3.28e-05
79	3	9.28e-03	0.01	-0.04	5.20e-05	1.02e-04	5.55e-05
79	4	9.32e-03	0.01	-0.04	5.24e-05	1.02e-04	5.54e-05
79	5	5.01e-03	7.25e-03	-0.03	1.57e-05	4.96e-05	2.38e-05
79	6	5.05e-03	7.25e-03	-0.03	1.61e-05	4.97e-05	2.37e-05

79	7	7.37e-03	9.70e-03	-0.03	4.51e-05	8.24e-05	4.64e-05
79	8	7.41e-03	9.69e-03	-0.03	4.55e-05	8.25e-05	4.63e-05
79	9	7.00e-03	9.81e-03	-0.04	2.33e-05	6.93e-05	3.27e-05
79	10	8.58e-03	0.01	-0.04	4.32e-05	9.20e-05	4.87e-05
79	11	8.65e-03	0.01	-0.04	4.39e-05	9.23e-05	4.85e-05
79	12	5.09e-03	7.24e-03	-0.03	1.65e-05	4.98e-05	2.36e-05
79	13	6.66e-03	8.97e-03	-0.03	3.63e-05	7.25e-05	3.96e-05
79	14	6.74e-03	8.95e-03	-0.03	3.70e-05	7.28e-05	3.94e-05
79	15	0.09	0.03	-0.03	-1.07e-05	2.38e-04	4.61e-05
79	16	0.08	-0.03	-0.03	8.12e-05	2.13e-04	3.70e-05
79	17	-0.07	0.04	-0.03	-2.62e-05	-8.77e-05	2.87e-05
79	18	-0.08	-0.02	-0.02	6.57e-05	-1.13e-04	1.96e-05
79	19	0.08	0.03	-0.03	-7.93e-06	2.16e-04	3.48e-05
79	20	0.09	-0.02	-0.03	7.84e-05	2.35e-04	4.83e-05
79	21	-0.08	0.04	-0.03	-2.34e-05	-1.10e-04	1.74e-05
79	22	-0.07	-0.01	-0.02	6.29e-05	-9.08e-05	3.09e-05
79	23	0.07	0.02	-0.03	2.44e-06	1.96e-04	1.01e-05
79	24	0.06	-0.03	-0.03	9.44e-05	1.71e-04	0.0
79	25	-0.05	0.05	-0.03	-3.94e-05	-4.60e-05	6.48e-05
79	26	-0.06	-6.56e-03	-0.02	5.25e-05	-7.10e-05	5.56e-05
79	27	0.06	0.02	-0.03	5.24e-06	1.74e-04	-1.27e-06
79	28	0.07	-0.03	-0.03	9.16e-05	1.93e-04	1.22e-05
79	29	-0.06	0.05	-0.03	-3.66e-05	-6.80e-05	5.35e-05
79	30	-0.05	-4.45e-03	-0.02	4.97e-05	-4.90e-05	6.70e-05
79	31	0.05	0.10	-0.03	-1.23e-04	1.53e-04	5.07e-05
79	32	9.74e-03	-0.09	-0.02	1.83e-04	6.98e-05	2.02e-05
79	33	2.17e-03	0.10	-0.03	-1.28e-04	5.56e-05	4.55e-05
79	34	-0.04	-0.09	-0.02	1.78e-04	-2.80e-05	1.50e-05
79	35	0.05	0.10	-0.03	-1.19e-04	1.41e-04	3.99e-05
79	36	3.29e-03	-0.09	-0.02	1.87e-04	5.72e-05	9.38e-06
79	37	8.62e-03	0.11	-0.03	-1.32e-04	6.81e-05	5.63e-05
79	38	-0.03	-0.08	-0.02	1.74e-04	-1.55e-05	2.58e-05
79	39	0.02	0.09	-0.03	-1.14e-04	7.99e-05	1.29e-05
79	40	0.05	-0.08	-0.03	1.74e-04	1.43e-04	5.80e-05
79	41	-0.03	0.10	-0.03	-1.19e-04	-1.79e-05	7.73e-06
79	42	-3.29e-03	-0.08	-0.02	1.69e-04	4.54e-05	5.28e-05
79	43	8.75e-03	0.09	-0.03	-1.10e-04	6.74e-05	2.13e-06
79	44	0.04	-0.08	-0.03	1.78e-04	1.31e-04	4.72e-05
79	45	-0.03	0.10	-0.03	-1.23e-04	-5.33e-06	1.85e-05
79	46	3.16e-03	-0.08	-0.02	1.65e-04	5.80e-05	6.36e-05
79	47	-0.10	0.02	-0.02	4.13e-06	-1.48e-04	6.13e-05
79	48	0.11	-6.84e-03	-0.03	5.09e-05	2.74e-04	4.36e-06
79	49	-4.20e-04	-0.14	-0.02	2.65e-04	5.06e-05	4.47e-05
79	50	0.01	0.15	-0.03	-2.10e-04	7.48e-05	2.10e-05
80	1	0.02	0.06	-0.03	-1.67e-04	6.62e-05	2.92e-06
80	2	0.02	0.06	-0.03	-1.68e-04	6.64e-05	2.90e-06
80	3	0.02	0.07	-0.03	-1.73e-04	6.64e-05	1.07e-06
80	4	0.02	0.07	-0.03	-1.74e-04	6.67e-05	1.05e-06
80	5	0.01	0.04	-0.02	-1.20e-04	4.67e-05	2.37e-06
80	6	0.01	0.04	-0.02	-1.20e-04	4.70e-05	2.35e-06
80	7	0.02	0.05	-0.03	-1.26e-04	4.70e-05	0.0
80	8	0.02	0.05	-0.03	-1.26e-04	4.73e-05	0.0
80	9	0.02	0.06	-0.03	-1.68e-04	6.67e-05	2.88e-06
80	10	0.02	0.06	-0.03	-1.72e-04	6.64e-05	1.62e-06
80	11	0.02	0.06	-0.03	-1.73e-04	6.69e-05	1.58e-06
80	12	0.01	0.04	-0.02	-1.21e-04	4.72e-05	2.33e-06
80	13	0.02	0.05	-0.03	-1.24e-04	4.69e-05	1.08e-06
80	14	0.02	0.05	-0.03	-1.25e-04	4.74e-05	1.04e-06
80	15	0.19	0.10	-0.04	-2.57e-04	4.15e-04	-7.52e-05
80	16	0.20	-6.54e-03	-0.04	-6.51e-05	4.48e-04	-9.79e-05
80	17	-0.18	0.10	-0.01	-1.79e-04	-3.54e-04	1.01e-04
80	18	-0.16	-0.01	-7.47e-03	1.25e-05	-3.21e-04	7.84e-05
80	19	0.19	0.11	-0.04	-2.61e-04	4.43e-04	-9.36e-05
80	20	0.20	-7.68e-03	-0.04	-6.15e-05	4.19e-04	-7.94e-05
80	21	-0.18	0.10	-0.01	-1.83e-04	-3.26e-04	8.27e-05
80	22	-0.16	-0.01	-7.37e-03	1.61e-05	-3.49e-04	9.69e-05
80	23	0.22	0.10	-0.04	-2.49e-04	3.91e-04	-1.07e-04
80	24	0.23	-0.01	-0.04	-5.71e-05	4.23e-04	-1.30e-04
80	25	-0.21	0.11	-0.01	-1.87e-04	-3.30e-04	1.33e-04
80	26	-0.19	-5.22e-03	-8.60e-03	4.58e-06	-2.97e-04	1.11e-04
80	27	0.22	0.10	-0.04	-2.53e-04	4.19e-04	-1.26e-04
80	28	0.23	-0.02	-0.04	-5.36e-05	3.95e-04	-1.12e-04
80	29	-0.20	0.11	-0.01	-1.91e-04	-3.01e-04	1.15e-04
80	30	-0.19	-6.37e-03	-8.50e-03	8.12e-06	-3.25e-04	1.29e-04
80	31	0.04	0.23	-0.04	-4.54e-04	1.07e-04	1.30e-05
80	32	0.09	-0.14	-0.02	1.86e-04	2.17e-04	-6.27e-05
80	33	-0.07	0.23	-0.03	-4.30e-04	-1.23e-04	6.59e-05

80	34	-0.01	-0.14	-0.01	2.09e-04	-1.37e-05	-9.76e-06
80	35	0.05	0.23	-0.04	-4.51e-04	1.00e-04	3.34e-06
80	36	0.10	-0.14	-0.02	1.88e-04	2.10e-04	-7.23e-05
80	37	-0.08	0.23	-0.03	-4.33e-04	-1.16e-04	7.56e-05
80	38	-0.02	-0.14	-0.01	2.07e-04	-6.47e-06	0.0
80	39	0.04	0.23	-0.04	-4.65e-04	2.02e-04	-4.85e-05
80	40	0.09	-0.14	-0.02	1.98e-04	1.22e-04	-1.12e-06
80	41	-0.06	0.23	-0.03	-4.42e-04	-2.88e-05	4.39e-06
80	42	-0.02	-0.14	-0.01	2.21e-04	-1.08e-04	5.18e-05
80	43	0.05	0.23	-0.04	-4.63e-04	1.95e-04	-5.82e-05
80	44	0.10	-0.14	-0.02	2.00e-04	1.15e-04	-1.08e-05
80	45	-0.07	0.24	-0.03	-4.45e-04	-2.15e-05	1.41e-05
80	46	-0.03	-0.14	-0.01	2.19e-04	-1.01e-04	6.15e-05
80	47	-0.30	0.04	-2.64e-03	-7.17e-05	-5.27e-04	1.68e-04
80	48	0.32	0.05	-0.05	-1.73e-04	6.20e-04	-1.65e-04
80	49	0.02	-0.25	-0.01	3.98e-04	6.57e-05	-1.18e-05
80	50	4.49e-03	0.34	-0.04	-6.42e-04	2.79e-05	1.50e-05
81	1	6.67e-03	0.01	-0.03	4.10e-05	-8.24e-05	-6.96e-06
81	2	6.70e-03	0.01	-0.03	4.09e-05	-8.21e-05	-6.38e-06
81	3	8.97e-03	0.01	-0.03	6.15e-05	-1.09e-04	-2.15e-05
81	4	9.01e-03	0.01	-0.03	6.14e-05	-1.09e-04	-2.09e-05
81	5	4.82e-03	8.02e-03	-0.02	3.00e-05	-6.16e-05	-4.75e-06
81	6	4.86e-03	8.06e-03	-0.02	3.00e-05	-6.13e-05	-4.17e-06
81	7	7.13e-03	0.01	-0.02	5.06e-05	-8.83e-05	-1.92e-05
81	8	7.16e-03	0.01	-0.02	5.05e-05	-8.80e-05	-1.87e-05
81	9	6.74e-03	0.01	-0.03	4.08e-05	-8.18e-05	-5.80e-06
81	10	8.28e-03	0.01	-0.03	5.53e-05	-1.01e-04	-1.71e-05
81	11	8.35e-03	0.01	-0.03	5.52e-05	-1.01e-04	-1.59e-05
81	12	4.89e-03	8.10e-03	-0.02	2.99e-05	-6.10e-05	-3.60e-06
81	13	6.44e-03	9.81e-03	-0.02	4.44e-05	-8.03e-05	-1.49e-05
81	14	6.50e-03	9.88e-03	-0.02	4.43e-05	-7.97e-05	-1.37e-05
81	15	0.10	0.03	-0.01	-2.15e-05	1.99e-04	6.68e-06
81	16	0.08	-0.04	-0.01	6.95e-05	1.60e-04	1.69e-05
81	17	-0.07	0.05	-0.03	7.00e-06	-3.05e-04	-3.80e-05
81	18	-0.08	-7.44e-03	-0.03	9.80e-05	-3.44e-04	-2.78e-05
81	19	0.08	0.02	-0.01	-1.04e-05	1.65e-04	3.41e-06
81	20	0.09	-0.03	-0.01	5.84e-05	1.95e-04	2.02e-05
81	21	-0.08	0.05	-0.03	1.81e-05	-3.39e-04	-4.13e-05
81	22	-0.07	-5.57e-04	-0.03	8.69e-05	-3.09e-04	-2.45e-05
81	23	0.07	3.94e-03	-0.02	4.01e-05	1.35e-04	6.07e-06
81	24	0.06	-0.06	-0.02	1.31e-04	9.59e-05	1.63e-05
81	25	-0.05	0.08	-0.03	-5.46e-05	-2.40e-04	-3.74e-05
81	26	-0.06	0.01	-0.03	3.64e-05	-2.79e-04	-2.72e-05
81	27	0.06	-2.94e-03	-0.02	5.12e-05	1.00e-04	2.80e-06
81	28	0.07	-0.05	-0.01	1.20e-04	1.30e-04	1.96e-05
81	29	-0.06	0.07	-0.03	-4.35e-05	-2.75e-04	-4.07e-05
81	30	-0.05	0.02	-0.02	2.53e-05	-2.45e-04	-2.39e-05
81	31	0.05	0.11	-0.02	-1.18e-04	6.80e-05	-2.09e-05
81	32	9.40e-03	-0.10	-0.02	1.86e-04	-6.13e-05	1.32e-05
81	33	2.09e-03	0.12	-0.02	-1.09e-04	-8.32e-05	-3.43e-05
81	34	-0.04	-0.09	-0.02	1.94e-04	-2.13e-04	0.0
81	35	0.05	0.10	-0.02	-9.92e-05	4.87e-05	-2.11e-05
81	36	2.84e-03	-0.11	-0.02	2.04e-04	-8.07e-05	1.30e-05
81	37	8.65e-03	0.12	-0.02	-1.28e-04	-6.39e-05	-3.41e-05
81	38	-0.03	-0.08	-0.02	1.76e-04	-1.93e-04	0.0
81	39	0.02	0.09	-0.02	-8.08e-05	-4.63e-05	-3.18e-05
81	40	0.05	-0.08	-0.02	1.49e-04	5.31e-05	2.41e-05
81	41	-0.03	0.09	-0.02	-7.22e-05	-1.98e-04	-4.52e-05
81	42	-3.84e-03	-0.07	-0.02	1.57e-04	-9.82e-05	1.07e-05
81	43	8.77e-03	0.08	-0.02	-6.23e-05	-6.57e-05	-3.20e-05
81	44	0.04	-0.08	-0.02	1.67e-04	3.37e-05	2.39e-05
81	45	-0.03	0.10	-0.02	-9.07e-05	-1.78e-04	-4.50e-05
81	46	2.72e-03	-0.06	-0.02	1.39e-04	-7.88e-05	1.09e-05
81	47	-0.10	0.05	-0.03	-1.20e-05	-3.99e-04	-3.63e-05
81	48	0.11	-0.03	-0.01	8.85e-05	2.54e-04	1.52e-05
81	49	-9.14e-04	-0.14	-0.02	2.51e-04	-5.38e-05	6.67e-06
81	50	0.01	0.16	-0.02	-1.74e-04	-9.08e-05	-2.78e-05
82	1	0.01	0.04	-0.02	-1.34e-04	-8.22e-06	1.52e-05
82	2	0.01	0.04	-0.02	-1.35e-04	-1.12e-05	1.26e-05
82	3	0.02	0.04	-0.02	-1.53e-04	1.75e-06	2.50e-05
82	4	0.02	0.04	-0.02	-1.53e-04	-1.18e-06	2.25e-05
82	5	9.26e-03	0.03	-0.01	-9.80e-05	-6.90e-06	9.89e-06
82	6	9.27e-03	0.03	-0.01	-9.87e-05	-9.82e-06	7.33e-06
82	7	0.01	0.03	-0.01	-1.16e-04	3.08e-06	1.97e-05
82	8	0.01	0.03	-0.01	-1.17e-04	0.0	1.72e-05
82	9	0.01	0.04	-0.02	-1.36e-04	-1.41e-05	1.01e-05
82	10	0.02	0.04	-0.02	-1.47e-04	-1.24e-06	2.21e-05

82	11	0.02	0.04	-0.02	-1.48e-04	-7.10e-06	1.70e-05
82	12	9.28e-03	0.03	-0.01	-9.93e-05	-1.28e-05	4.77e-06
82	13	0.01	0.03	-0.01	-1.11e-04	0.0	1.68e-05
82	14	0.01	0.03	-0.01	-1.12e-04	-5.77e-06	1.17e-05
82	15	0.17	0.06	-4.11e-03	-1.58e-04	2.68e-04	-1.23e-04
82	16	0.13	-0.05	2.81e-03	3.06e-05	2.05e-04	-3.70e-05
82	17	-0.11	0.11	-0.03	-2.41e-04	-2.11e-04	6.47e-05
82	18	-0.14	-1.99e-03	-0.02	-5.25e-05	-2.74e-04	1.51e-04
82	19	0.14	0.05	-4.86e-03	-1.38e-04	2.14e-04	-1.07e-04
82	20	0.16	-0.04	3.55e-03	1.02e-05	2.59e-04	-5.37e-05
82	21	-0.14	0.10	-0.03	-2.21e-04	-2.64e-04	8.14e-05
82	22	-0.11	0.01	-0.02	-7.29e-05	-2.20e-04	1.34e-04
82	23	0.12	0.02	-6.31e-03	-8.99e-05	1.86e-04	-9.17e-05
82	24	0.08	-0.09	6.16e-04	9.90e-05	1.24e-04	-5.57e-06
82	25	-0.06	0.15	-0.03	-3.10e-04	-1.29e-04	3.32e-05
82	26	-0.10	0.04	-0.02	-1.21e-04	-1.92e-04	1.19e-04
82	27	0.09	9.19e-03	-7.05e-03	-6.95e-05	1.33e-04	-7.50e-05
82	28	0.12	-0.08	1.36e-03	7.86e-05	1.77e-04	-2.23e-05
82	29	-0.09	0.14	-0.03	-2.89e-04	-1.83e-04	4.99e-05
82	30	-0.07	0.05	-0.02	-1.41e-04	-1.39e-04	1.03e-04
82	31	0.11	0.21	-0.02	-4.08e-04	1.73e-04	-1.58e-04
82	32	-6.39e-03	-0.16	2.31e-03	2.22e-04	-3.53e-05	1.29e-04
82	33	0.03	0.22	-0.03	-4.33e-04	2.95e-05	-1.02e-04
82	34	-0.09	-0.15	-5.03e-03	1.97e-04	-1.79e-04	1.86e-04
82	35	0.10	0.20	-0.02	-3.87e-04	1.49e-04	-1.49e-04
82	36	-0.02	-0.18	1.66e-03	2.42e-04	-5.97e-05	1.39e-04
82	37	0.04	0.23	-0.03	-4.53e-04	5.39e-05	-1.11e-04
82	38	-0.08	-0.14	-4.37e-03	1.76e-04	-1.54e-04	1.76e-04
82	39	9.62e-03	0.17	-0.02	-3.40e-04	-4.51e-06	-1.02e-04
82	40	0.10	-0.12	4.79e-03	1.54e-04	1.42e-04	7.36e-05
82	41	-0.07	0.18	-0.03	-3.65e-04	-1.48e-04	-4.59e-05
82	42	0.01	-0.11	-2.55e-03	1.29e-04	-1.30e-06	1.30e-04
82	43	-4.40e-03	0.16	-0.02	-3.19e-04	-2.90e-05	-9.29e-05
82	44	0.08	-0.14	4.14e-03	1.74e-04	1.18e-04	8.30e-05
82	45	-0.06	0.19	-0.03	-3.85e-04	-1.24e-04	-5.54e-05
82	46	0.03	-0.10	-1.89e-03	1.08e-04	2.32e-05	1.21e-04
82	47	-0.15	0.10	-0.03	-2.31e-04	-2.84e-04	1.20e-04
82	48	0.17	-0.04	4.01e-03	2.00e-05	2.78e-04	-9.26e-05
82	49	0.03	-0.24	7.14e-03	3.42e-04	-3.47e-05	1.96e-04
82	50	-6.48e-03	0.29	-0.03	-5.53e-04	2.89e-05	-1.68e-04
83	1	0.01	0.03	-0.03	-1.74e-04	4.73e-05	-2.66e-06
83	2	0.01	0.03	-0.03	-1.75e-04	4.76e-05	-2.54e-06
83	3	0.02	0.04	-0.03	-1.87e-04	4.67e-05	-2.28e-06
83	4	0.02	0.04	-0.03	-1.88e-04	4.69e-05	-2.16e-06
83	5	0.01	0.03	-0.02	-1.26e-04	3.32e-05	-2.19e-06
83	6	0.01	0.03	-0.02	-1.26e-04	3.35e-05	-2.07e-06
83	7	0.02	0.03	-0.03	-1.39e-04	3.26e-05	-1.81e-06
83	8	0.02	0.03	-0.03	-1.40e-04	3.29e-05	-1.69e-06
83	9	0.01	0.03	-0.03	-1.75e-04	4.79e-05	-2.42e-06
83	10	0.02	0.04	-0.03	-1.83e-04	4.69e-05	-2.39e-06
83	11	0.02	0.04	-0.03	-1.85e-04	4.74e-05	-2.15e-06
83	12	0.01	0.03	-0.02	-1.27e-04	3.38e-05	-1.95e-06
83	13	0.01	0.03	-0.03	-1.35e-04	3.28e-05	-1.92e-06
83	14	0.01	0.03	-0.03	-1.36e-04	3.33e-05	-1.68e-06
83	15	0.18	0.07	-0.03	-2.41e-04	3.34e-04	2.25e-05
83	16	0.20	-0.03	-0.03	-3.94e-05	3.60e-04	6.45e-06
83	17	-0.17	0.09	-0.02	-2.23e-04	-2.94e-04	-1.05e-05
83	18	-0.16	-0.02	-0.02	-2.16e-05	-2.68e-04	-2.66e-05
83	19	0.18	0.07	-0.03	-2.34e-04	3.57e-04	2.54e-06
83	20	0.20	-0.03	-0.03	-4.59e-05	3.37e-04	2.64e-05
83	21	-0.17	0.08	-0.02	-2.16e-04	-2.71e-04	-3.05e-05
83	22	-0.16	-0.01	-0.02	-2.82e-05	-2.91e-04	-6.61e-06
83	23	0.21	0.05	-0.03	-1.96e-04	3.21e-04	-4.16e-05
83	24	0.23	-0.05	-0.03	5.30e-06	3.47e-04	-5.76e-05
83	25	-0.20	0.10	-0.02	-2.68e-04	-2.81e-04	5.36e-05
83	26	-0.19	3.68e-04	-0.02	-6.63e-05	-2.55e-04	3.75e-05
83	27	0.21	0.05	-0.03	-1.89e-04	3.44e-04	-6.15e-05
83	28	0.23	-0.04	-0.03	-1.25e-06	3.24e-04	-3.77e-05
83	29	-0.20	0.10	-0.02	-2.61e-04	-2.58e-04	3.36e-05
83	30	-0.19	4.04e-03	-0.02	-7.29e-05	-2.78e-04	5.75e-05
83	31	0.04	0.19	-0.03	-4.69e-04	8.40e-05	2.97e-05
83	32	0.09	-0.14	-0.02	2.02e-04	1.70e-04	-2.38e-05
83	33	-0.07	0.20	-0.03	-4.64e-04	-1.04e-04	1.98e-05
83	34	-0.01	-0.14	-0.02	2.07e-04	-1.80e-05	-3.38e-05
83	35	0.05	0.19	-0.03	-4.56e-04	8.00e-05	1.05e-05
83	36	0.10	-0.15	-0.02	2.15e-04	1.66e-04	-4.31e-05
83	37	-0.08	0.20	-0.03	-4.77e-04	-1.01e-04	3.90e-05

83	38	-0.02	-0.13	-0.02	1.94e-04	-1.41e-05	-1.45e-05
83	39	0.04	0.18	-0.03	-4.47e-04	1.59e-04	-3.69e-05
83	40	0.09	-0.13	-0.02	1.80e-04	9.51e-05	4.27e-05
83	41	-0.06	0.19	-0.03	-4.42e-04	-2.91e-05	-4.68e-05
83	42	-0.02	-0.13	-0.02	1.85e-04	-9.34e-05	3.28e-05
83	43	0.05	0.18	-0.03	-4.34e-04	1.55e-04	-5.61e-05
83	44	0.10	-0.14	-0.02	1.93e-04	9.11e-05	2.35e-05
83	45	-0.07	0.19	-0.03	-4.56e-04	-2.52e-05	-2.76e-05
83	46	-0.03	-0.12	-0.02	1.72e-04	-8.94e-05	5.20e-05
83	47	-0.29	0.05	-0.01	-1.62e-04	-4.44e-04	4.62e-05
83	48	0.31	2.22e-03	-0.04	-1.00e-04	5.10e-04	-5.03e-05
83	49	0.02	-0.23	-0.02	3.88e-04	1.54e-05	2.07e-05
83	50	3.38e-03	0.29	-0.03	-6.50e-04	5.06e-05	-2.48e-05
84	1	6.30e-03	9.67e-03	-0.01	3.14e-05	8.58e-05	-1.96e-05
84	2	6.35e-03	9.70e-03	-0.01	3.17e-05	8.60e-05	-1.96e-05
84	3	8.63e-03	0.01	-0.02	2.35e-05	1.38e-04	-3.36e-05
84	4	8.68e-03	0.01	-0.02	2.38e-05	1.38e-04	-3.36e-05
84	5	4.54e-03	7.11e-03	-0.01	2.49e-05	6.12e-05	-1.38e-05
84	6	4.59e-03	7.14e-03	-0.01	2.52e-05	6.14e-05	-1.37e-05
84	7	6.87e-03	9.47e-03	-0.01	1.71e-05	1.13e-04	-2.78e-05
84	8	6.92e-03	9.50e-03	-0.01	1.74e-05	1.13e-04	-2.78e-05
84	9	6.40e-03	9.72e-03	-0.01	3.20e-05	8.61e-05	-1.95e-05
84	10	7.93e-03	0.01	-0.02	2.59e-05	1.22e-04	-2.94e-05
84	11	8.03e-03	0.01	-0.02	2.65e-05	1.22e-04	-2.94e-05
84	12	4.64e-03	7.17e-03	-0.01	2.55e-05	6.15e-05	-1.37e-05
84	13	6.17e-03	8.76e-03	-0.01	1.94e-05	9.76e-05	-2.36e-05
84	14	6.27e-03	8.82e-03	-0.01	2.00e-05	9.79e-05	-2.35e-05
84	15	0.09	0.04	-0.02	-2.25e-05	3.65e-04	-5.32e-05
84	16	0.10	1.39e-04	-0.02	2.89e-05	4.01e-04	-6.29e-05
84	17	-0.09	0.02	-5.50e-03	1.47e-05	-2.37e-04	2.41e-05
84	18	-0.08	-0.03	-3.58e-03	6.61e-05	-2.01e-04	1.44e-05
84	19	0.09	0.05	-0.02	-3.10e-05	3.96e-04	-5.56e-05
84	20	0.10	-7.77e-03	-0.02	3.74e-05	3.70e-04	-6.06e-05
84	21	-0.08	0.02	-5.43e-03	6.15e-06	-2.06e-04	2.18e-05
84	22	-0.08	-0.04	-3.66e-03	7.46e-05	-2.32e-04	1.68e-05
84	23	0.07	0.06	-0.02	-4.63e-05	3.05e-04	-6.91e-05
84	24	0.08	0.02	-0.02	5.08e-06	3.41e-04	-7.88e-05
84	25	-0.07	-3.26e-03	-6.26e-03	3.85e-05	-1.77e-04	4.00e-05
84	26	-0.06	-0.05	-4.34e-03	8.99e-05	-1.41e-04	3.03e-05
84	27	0.07	0.07	-0.02	-5.48e-05	3.36e-04	-7.14e-05
84	28	0.08	0.01	-0.02	1.36e-05	3.10e-04	-7.64e-05
84	29	-0.07	4.64e-03	-6.19e-03	3.00e-05	-1.46e-04	3.77e-05
84	30	-0.06	-0.06	-4.41e-03	9.84e-05	-1.72e-04	3.26e-05
84	31	0.02	0.09	-0.02	-6.95e-05	1.12e-04	-1.48e-05
84	32	0.05	-0.06	-9.91e-03	1.02e-04	2.33e-04	-4.72e-05
84	33	-0.04	0.08	-0.01	-5.83e-05	-6.85e-05	8.37e-06
84	34	-4.72e-03	-0.07	-5.96e-03	1.13e-04	5.20e-05	-2.39e-05
84	35	0.01	0.09	-0.02	-7.66e-05	9.41e-05	-1.96e-05
84	36	0.04	-0.06	-9.69e-03	9.47e-05	2.15e-04	-5.19e-05
84	37	-0.03	0.07	-0.01	-5.12e-05	-5.05e-05	1.31e-05
84	38	6.89e-04	-0.08	-6.19e-03	1.20e-04	7.00e-05	-1.92e-05
84	39	0.02	0.11	-0.02	-9.78e-05	2.17e-04	-2.26e-05
84	40	0.05	-0.09	-0.01	1.30e-04	1.28e-04	-3.94e-05
84	41	-0.03	0.10	-0.01	-8.67e-05	3.61e-05	0.0
84	42	-5.87e-03	-0.10	-6.20e-03	1.41e-04	-5.26e-05	-1.62e-05
84	43	0.01	0.12	-0.02	-1.05e-04	1.99e-04	-2.74e-05
84	44	0.04	-0.08	-9.92e-03	1.23e-04	1.10e-04	-4.41e-05
84	45	-0.03	0.10	-0.01	-7.95e-05	5.41e-05	5.35e-06
84	46	-4.62e-04	-0.10	-6.42e-03	1.49e-04	-3.46e-05	-1.14e-05
84	47	-0.11	-0.03	-1.61e-03	7.23e-05	-3.27e-04	4.76e-05
84	48	0.12	0.05	-0.02	-2.88e-05	4.91e-04	-8.64e-05
84	49	0.01	-0.13	-6.34e-03	1.78e-04	6.42e-05	-3.21e-05
84	50	-6.25e-04	0.14	-0.02	-1.35e-04	9.99e-05	-6.73e-06
85	1	6.35e-03	0.01	-0.01	-6.91e-05	5.36e-05	7.58e-06
85	2	6.40e-03	0.01	-0.01	-6.95e-05	5.37e-05	7.60e-06
85	3	8.74e-03	0.01	-0.01	-8.66e-05	8.71e-05	9.27e-06
85	4	8.78e-03	0.01	-0.01	-8.70e-05	8.72e-05	9.28e-06
85	5	4.58e-03	7.38e-03	-8.49e-03	-5.08e-05	3.81e-05	5.41e-06
85	6	4.63e-03	7.42e-03	-8.48e-03	-5.12e-05	3.82e-05	5.42e-06
85	7	6.96e-03	9.56e-03	-0.01	-6.83e-05	7.15e-05	7.09e-06
85	8	7.01e-03	9.60e-03	-0.01	-6.87e-05	7.16e-05	7.11e-06
85	9	6.45e-03	0.01	-0.01	-6.99e-05	5.38e-05	7.61e-06
85	10	8.02e-03	0.01	-0.01	-8.13e-05	7.70e-05	8.76e-06
85	11	8.12e-03	0.01	-0.01	-8.21e-05	7.72e-05	8.79e-06
85	12	4.68e-03	7.46e-03	-8.47e-03	-5.16e-05	3.83e-05	5.44e-06
85	13	6.25e-03	8.90e-03	-0.01	-6.30e-05	6.15e-05	6.59e-06
85	14	6.35e-03	8.98e-03	-0.01	-6.38e-05	6.17e-05	6.62e-06

85	15	0.09	0.04	-8.70e-03	-1.78e-04	2.94e-04	6.38e-05
85	16	0.10	-6.34e-03	-0.01	-1.68e-05	3.20e-04	2.86e-05
85	17	-0.09	0.02	-4.20e-03	-9.88e-05	-2.18e-04	-1.65e-05
85	18	-0.08	-0.02	-0.01	6.28e-05	-1.91e-04	-5.17e-05
85	19	0.09	0.05	-8.05e-03	-2.06e-04	2.92e-04	6.14e-05
85	20	0.10	-0.01	-0.02	1.04e-05	3.22e-04	3.10e-05
85	21	-0.08	0.03	-3.54e-03	-1.26e-04	-2.19e-04	-1.89e-05
85	22	-0.08	-0.03	-0.01	9.00e-05	-1.89e-04	-4.93e-05
85	23	0.07	0.04	-9.30e-03	-2.03e-04	2.43e-04	-2.34e-05
85	24	0.08	4.04e-04	-0.02	-4.12e-05	2.69e-04	-5.86e-05
85	25	-0.07	0.02	-3.60e-03	-7.44e-05	-1.66e-04	7.08e-05
85	26	-0.06	-0.03	-9.58e-03	8.72e-05	-1.40e-04	3.56e-05
85	27	0.07	0.05	-8.64e-03	-2.30e-04	2.41e-04	-2.58e-05
85	28	0.08	-7.11e-03	-0.02	-1.40e-05	2.71e-04	-5.62e-05
85	29	-0.07	0.02	-2.94e-03	-1.02e-04	-1.68e-04	6.84e-05
85	30	-0.06	-0.04	-0.01	1.14e-04	-1.38e-04	3.80e-05
85	31	0.02	0.08	-1.48e-04	-3.39e-04	8.40e-05	7.68e-05
85	32	0.05	-0.06	-0.02	2.00e-04	1.72e-04	-4.05e-05
85	33	-0.04	0.08	1.20e-03	-3.15e-04	-6.95e-05	5.27e-05
85	34	-4.64e-03	-0.07	-0.02	2.23e-04	1.89e-05	-6.46e-05
85	35	0.01	0.09	-3.28e-04	-3.46e-04	6.85e-05	5.06e-05
85	36	0.04	-0.06	-0.02	1.92e-04	1.57e-04	-6.67e-05
85	37	-0.03	0.08	1.38e-03	-3.08e-04	-5.41e-05	7.88e-05
85	38	7.87e-04	-0.07	-0.02	2.31e-04	3.44e-05	-3.84e-05
85	39	0.02	0.11	2.04e-03	-4.30e-04	7.84e-05	6.88e-05
85	40	0.05	-0.09	-0.02	2.90e-04	1.78e-04	-3.26e-05
85	41	-0.03	0.10	3.40e-03	-4.06e-04	-7.50e-05	4.47e-05
85	42	-5.84e-03	-0.09	-0.02	3.14e-04	2.45e-05	-5.67e-05
85	43	0.01	0.11	1.86e-03	-4.37e-04	6.30e-05	4.27e-05
85	44	0.04	-0.09	-0.02	2.83e-04	1.63e-04	-5.88e-05
85	45	-0.03	0.10	3.57e-03	-3.99e-04	-5.96e-05	7.09e-05
85	46	-4.19e-04	-0.09	-0.02	3.22e-04	3.99e-05	-3.05e-05
85	47	-0.11	-7.53e-03	-6.38e-03	2.16e-05	-2.93e-04	-4.82e-05
85	48	0.12	0.02	-0.01	-1.37e-04	3.96e-04	6.04e-05
85	49	0.01	-0.13	-0.03	4.40e-04	8.17e-05	-7.96e-05
85	50	-5.45e-04	0.14	8.05e-03	-5.56e-04	2.12e-05	9.18e-05
86	1	6.14e-03	9.29e-03	-0.02	1.51e-05	3.32e-05	-1.49e-05
86	2	6.18e-03	9.28e-03	-0.02	1.59e-05	3.34e-05	-1.48e-05
86	3	8.28e-03	0.01	-0.02	2.12e-05	5.80e-05	-2.42e-05
86	4	8.32e-03	0.01	-0.02	2.21e-05	5.82e-05	-2.41e-05
86	5	4.43e-03	6.87e-03	-0.01	1.13e-05	2.36e-05	-1.05e-05
86	6	4.47e-03	6.86e-03	-0.01	1.21e-05	2.37e-05	-1.04e-05
86	7	6.57e-03	9.16e-03	-0.02	1.74e-05	4.84e-05	-1.97e-05
86	8	6.61e-03	9.15e-03	-0.02	1.83e-05	4.85e-05	-1.97e-05
86	9	6.22e-03	9.27e-03	-0.02	1.67e-05	3.35e-05	-1.48e-05
86	10	7.63e-03	0.01	-0.02	1.94e-05	5.06e-05	-2.14e-05
86	11	7.72e-03	0.01	-0.02	2.10e-05	5.09e-05	-2.13e-05
86	12	4.51e-03	6.85e-03	-0.01	1.29e-05	2.39e-05	-1.04e-05
86	13	5.93e-03	8.47e-03	-0.01	1.56e-05	4.09e-05	-1.70e-05
86	14	6.01e-03	8.45e-03	-0.01	1.72e-05	4.12e-05	-1.68e-05
86	15	0.08	0.04	-0.02	-1.45e-05	2.45e-04	-2.57e-05
86	16	0.09	-0.01	-0.02	2.37e-05	2.72e-04	-5.41e-05
86	17	-0.08	0.03	-9.74e-03	3.82e-06	-2.05e-04	2.57e-05
86	18	-0.07	-0.02	-8.59e-03	4.20e-05	-1.78e-04	-2.59e-06
86	19	0.08	0.04	-0.02	-1.68e-05	2.67e-04	-3.28e-05
86	20	0.09	-0.02	-0.02	2.60e-05	2.50e-04	-4.70e-05
86	21	-0.08	0.03	-9.56e-03	1.52e-06	-1.83e-04	1.86e-05
86	22	-0.07	-0.03	-8.77e-03	4.43e-05	-2.00e-04	4.50e-06
86	23	0.07	0.04	-0.02	-1.53e-05	1.99e-04	-3.35e-05
86	24	0.08	-7.61e-03	-0.02	2.29e-05	2.25e-04	-6.18e-05
86	25	-0.07	0.02	-0.01	4.65e-06	-1.58e-04	3.35e-05
86	26	-0.06	-0.03	-9.53e-03	4.28e-05	-1.32e-04	5.16e-06
86	27	0.07	0.05	-0.02	-1.76e-05	2.21e-04	-4.06e-05
86	28	0.08	-0.01	-0.02	2.52e-05	2.03e-04	-5.47e-05
86	29	-0.06	0.03	-0.01	2.36e-06	-1.36e-04	2.64e-05
86	30	-0.06	-0.03	-9.71e-03	4.51e-05	-1.54e-04	1.23e-05
86	31	0.01	0.09	-0.02	-5.26e-05	5.74e-05	2.53e-05
86	32	0.05	-0.07	-0.01	7.46e-05	1.45e-04	-6.91e-05
86	33	-0.04	0.09	-0.01	-4.71e-05	-7.77e-05	4.08e-05
86	34	-4.29e-03	-0.08	-0.01	8.01e-05	9.66e-06	-5.37e-05
86	35	9.63e-03	0.10	-0.02	-5.28e-05	4.34e-05	2.30e-05
86	36	0.04	-0.07	-0.01	7.44e-05	1.31e-04	-7.14e-05
86	37	-0.03	0.09	-0.01	-4.69e-05	-6.37e-05	4.31e-05
86	38	9.43e-04	-0.08	-0.01	8.04e-05	2.36e-05	-5.13e-05
86	39	0.02	0.10	-0.02	-6.02e-05	1.31e-04	1.69e-06
86	40	0.04	-0.09	-0.01	8.23e-05	7.13e-05	-4.55e-05
86	41	-0.03	0.10	-0.01	-5.47e-05	-4.30e-06	1.71e-05

86	42	-6.48e-03	-0.09	-0.01	8.77e-05	-6.37e-05	-3.00e-05
86	43	0.01	0.11	-0.02	-6.05e-05	1.17e-04	0.0
86	44	0.04	-0.08	-0.01	8.20e-05	5.74e-05	-4.78e-05
86	45	-0.03	0.10	-0.01	-5.45e-05	9.64e-06	1.95e-05
86	46	-1.24e-03	-0.09	-0.01	8.80e-05	-4.98e-05	-2.77e-05
86	47	-0.11	-4.23e-03	-7.44e-03	2.86e-05	-2.68e-04	3.17e-05
86	48	0.12	0.02	-0.02	-1.12e-06	3.35e-04	-6.00e-05
86	49	0.01	-0.13	-0.01	1.21e-04	1.78e-05	-7.05e-05
86	50	2.32e-04	0.15	-0.02	-9.35e-05	4.93e-05	4.21e-05
87	1	7.12e-03	6.91e-03	-0.02	2.09e-05	5.25e-05	1.34e-05
87	2	7.15e-03	6.98e-03	-0.02	2.05e-05	5.28e-05	1.34e-05
87	3	9.65e-03	9.42e-03	-0.02	3.22e-05	7.87e-05	1.79e-05
87	4	9.69e-03	9.49e-03	-0.02	3.18e-05	7.90e-05	1.79e-05
87	5	5.14e-03	5.17e-03	-0.01	1.29e-05	3.77e-05	9.56e-06
87	6	5.18e-03	5.24e-03	-0.01	1.25e-05	3.80e-05	9.56e-06
87	7	7.68e-03	7.68e-03	-0.02	2.42e-05	6.39e-05	1.41e-05
87	8	7.71e-03	7.75e-03	-0.02	2.38e-05	6.42e-05	1.41e-05
87	9	7.19e-03	7.05e-03	-0.02	2.01e-05	5.31e-05	1.34e-05
87	10	8.89e-03	8.67e-03	-0.02	2.89e-05	7.08e-05	1.66e-05
87	11	8.96e-03	8.81e-03	-0.02	2.80e-05	7.14e-05	1.66e-05
87	12	5.22e-03	5.31e-03	-0.01	1.21e-05	3.83e-05	9.57e-06
87	13	6.92e-03	6.93e-03	-0.02	2.08e-05	5.60e-05	1.27e-05
87	14	6.99e-03	7.07e-03	-0.02	2.00e-05	5.66e-05	1.28e-05
87	15	0.09	0.04	-0.02	-7.28e-05	3.07e-04	6.26e-05
87	16	0.10	-0.02	-0.03	1.42e-04	3.36e-04	4.58e-05
87	17	-0.09	0.03	-2.93e-03	-1.07e-04	-2.40e-04	-2.31e-05
87	18	-0.08	-0.02	-7.36e-03	1.08e-04	-2.11e-04	-3.99e-05
87	19	0.10	0.04	-0.02	-7.63e-05	3.33e-04	4.75e-05
87	20	0.09	-0.02	-0.03	1.46e-04	3.10e-04	6.10e-05
87	21	-0.08	0.03	-2.27e-03	-1.11e-04	-2.14e-04	-3.82e-05
87	22	-0.09	-0.02	-8.02e-03	1.11e-04	-2.37e-04	-2.47e-05
87	23	0.07	0.04	-0.02	-7.17e-05	2.51e-04	4.95e-05
87	24	0.08	-0.02	-0.03	1.43e-04	2.80e-04	3.27e-05
87	25	-0.07	0.03	-4.80e-03	-1.09e-04	-1.84e-04	-9.97e-06
87	26	-0.06	-0.02	-9.23e-03	1.07e-04	-1.55e-04	-2.68e-05
87	27	0.08	0.04	-0.02	-7.52e-05	2.77e-04	3.44e-05
87	28	0.07	-0.02	-0.03	1.47e-04	2.54e-04	4.78e-05
87	29	-0.06	0.03	-4.14e-03	-1.12e-04	-1.57e-04	-2.51e-05
87	30	-0.07	-0.02	-9.89e-03	1.10e-04	-1.81e-04	-1.16e-05
87	31	0.02	0.10	-0.01	-3.36e-04	8.15e-05	5.22e-05
87	32	0.05	-0.09	-0.03	3.81e-04	1.79e-04	-3.73e-06
87	33	-0.04	0.10	-4.85e-03	-3.46e-04	-8.27e-05	2.65e-05
87	34	-3.88e-03	-0.09	-0.02	3.71e-04	1.49e-05	-2.94e-05
87	35	0.01	0.10	-0.01	-3.36e-04	6.46e-05	4.83e-05
87	36	0.04	-0.09	-0.03	3.82e-04	1.62e-04	-7.67e-06
87	37	-0.03	0.10	-5.41e-03	-3.47e-04	-6.58e-05	3.04e-05
87	38	1.68e-03	-0.09	-0.02	3.70e-04	3.17e-05	-2.55e-05
87	39	0.05	0.10	-8.75e-03	-3.48e-04	1.69e-04	1.78e-06
87	40	0.02	-0.09	-0.03	3.93e-04	9.13e-05	4.67e-05
87	41	-6.30e-03	0.10	-2.66e-03	-3.58e-04	4.98e-06	-2.39e-05
87	42	-0.03	-0.09	-0.02	3.83e-04	-7.28e-05	2.10e-05
87	43	0.04	0.10	-8.18e-03	-3.47e-04	1.52e-04	-2.15e-06
87	44	0.01	-0.09	-0.03	3.93e-04	7.45e-05	4.27e-05
87	45	-7.36e-04	0.10	-3.22e-03	-3.58e-04	2.18e-05	-2.00e-05
87	46	-0.03	-0.09	-0.02	3.82e-04	-5.59e-05	2.49e-05
87	47	-0.11	3.64e-03	-1.29e-03	-8.18e-06	-3.17e-04	-3.49e-05
87	48	0.12	8.71e-03	-0.03	4.31e-05	4.13e-04	5.77e-05
87	49	0.01	-0.14	-0.03	5.99e-04	6.40e-05	3.68e-06
87	50	8.44e-04	0.16	-2.07e-03	-5.64e-04	3.24e-05	1.91e-05
88	1	6.30e-03	9.84e-03	-0.02	1.21e-05	5.42e-05	-8.40e-06
88	2	6.32e-03	9.84e-03	-0.02	1.28e-05	5.45e-05	-8.38e-06
88	3	8.52e-03	0.01	-0.02	1.74e-05	8.24e-05	-1.71e-05
88	4	8.54e-03	0.01	-0.02	1.81e-05	8.28e-05	-1.71e-05
88	5	4.56e-03	7.27e-03	-0.02	9.16e-06	3.89e-05	-5.82e-06
88	6	4.59e-03	7.26e-03	-0.02	9.91e-06	3.93e-05	-5.80e-06
88	7	6.78e-03	9.75e-03	-0.02	1.45e-05	6.72e-05	-1.45e-05
88	8	6.81e-03	9.74e-03	-0.02	1.52e-05	6.76e-05	-1.45e-05
88	9	6.35e-03	9.83e-03	-0.02	1.36e-05	5.49e-05	-8.37e-06
88	10	7.85e-03	0.01	-0.02	1.58e-05	7.40e-05	-1.45e-05
88	11	7.90e-03	0.01	-0.02	1.73e-05	7.47e-05	-1.45e-05
88	12	4.61e-03	7.25e-03	-0.02	1.07e-05	3.97e-05	-5.78e-06
88	13	6.11e-03	9.00e-03	-0.02	1.29e-05	5.87e-05	-1.19e-05
88	14	6.17e-03	8.99e-03	-0.02	1.44e-05	5.95e-05	-1.19e-05
88	15	0.09	0.03	-0.02	-6.38e-06	2.76e-04	-1.28e-05
88	16	0.10	-0.02	-0.02	3.68e-05	3.04e-04	-3.53e-05
88	17	-0.09	0.04	-0.01	-1.42e-05	-2.03e-04	1.67e-05
88	18	-0.08	-0.02	-9.99e-03	2.90e-05	-1.75e-04	-5.81e-06

88	19	0.10	0.03	-0.02	-5.13e-06	2.99e-04	-2.09e-05
88	20	0.09	-0.02	-0.02	3.55e-05	2.80e-04	-2.72e-05
88	21	-0.08	0.04	-0.01	-1.29e-05	-1.79e-04	8.59e-06
88	22	-0.08	-0.01	-0.01	2.77e-05	-1.99e-04	2.28e-06
88	23	0.07	0.02	-0.02	0.0	2.25e-04	-2.85e-05
88	24	0.08	-0.03	-0.02	4.24e-05	2.53e-04	-5.09e-05
88	25	-0.07	0.05	-0.01	-1.98e-05	-1.53e-04	3.23e-05
88	26	-0.06	-6.51e-03	-0.01	2.33e-05	-1.25e-04	9.84e-06
88	27	0.08	0.02	-0.02	0.0	2.49e-04	-3.65e-05
88	28	0.07	-0.03	-0.02	4.11e-05	2.30e-04	-4.29e-05
88	29	-0.06	0.05	-0.01	-1.86e-05	-1.29e-04	2.42e-05
88	30	-0.07	-4.43e-03	-0.01	2.21e-05	-1.49e-04	1.79e-05
88	31	0.01	0.10	-0.02	-5.94e-05	7.52e-05	2.37e-05
88	32	0.05	-0.09	-0.02	8.43e-05	1.69e-04	-5.12e-05
88	33	-0.04	0.10	-0.02	-6.18e-05	-6.85e-05	3.26e-05
88	34	-3.91e-03	-0.08	-0.01	8.20e-05	2.53e-05	-4.24e-05
88	35	9.40e-03	0.10	-0.02	-5.77e-05	6.01e-05	1.90e-05
88	36	0.04	-0.09	-0.01	8.60e-05	1.54e-04	-5.59e-05
88	37	-0.03	0.11	-0.02	-6.35e-05	-5.34e-05	3.73e-05
88	38	1.50e-03	-0.08	-0.01	8.03e-05	4.04e-05	-3.77e-05
88	39	0.04	0.09	-0.02	-5.53e-05	1.54e-04	-3.21e-06
88	40	0.02	-0.08	-0.02	8.02e-05	8.97e-05	-2.43e-05
88	41	-7.63e-03	0.10	-0.02	-5.76e-05	1.07e-05	5.64e-06
88	42	-0.03	-0.08	-0.01	7.78e-05	-5.39e-05	-1.54e-05
88	43	0.04	0.09	-0.02	-5.36e-05	1.39e-04	-7.90e-06
88	44	0.01	-0.08	-0.02	8.19e-05	7.46e-05	-2.89e-05
88	45	-2.22e-03	0.10	-0.02	-5.93e-05	2.58e-05	1.03e-05
88	46	-0.03	-0.08	-0.01	7.61e-05	-3.88e-05	-1.07e-05
88	47	-0.11	0.02	-9.18e-03	0.0	-2.69e-04	2.72e-05
88	48	0.12	-6.73e-03	-0.02	2.17e-05	3.69e-04	-4.58e-05
88	49	0.01	-0.14	-0.01	1.23e-04	3.36e-05	-4.50e-05
88	50	5.27e-04	0.15	-0.02	-1.00e-04	6.69e-05	2.64e-05
89	1	6.38e-03	0.01	-0.01	-7.63e-05	4.00e-05	4.48e-06
89	2	6.40e-03	0.01	-0.01	-7.68e-05	4.04e-05	4.41e-06
89	3	8.68e-03	0.01	-0.01	-9.22e-05	6.82e-05	2.01e-06
89	4	8.70e-03	0.01	-0.01	-9.27e-05	6.86e-05	1.95e-06
89	5	4.62e-03	8.18e-03	-8.08e-03	-5.61e-05	2.85e-05	3.26e-06
89	6	4.64e-03	8.22e-03	-8.08e-03	-5.65e-05	2.89e-05	3.19e-06
89	7	6.93e-03	0.01	-0.01	-7.20e-05	5.67e-05	0.0
89	8	6.95e-03	0.01	-0.01	-7.24e-05	5.71e-05	0.0
89	9	6.42e-03	0.01	-0.01	-7.72e-05	4.08e-05	4.34e-06
89	10	7.99e-03	0.01	-0.01	-8.75e-05	5.97e-05	2.75e-06
89	11	8.03e-03	0.01	-0.01	-8.83e-05	6.06e-05	2.62e-06
89	12	4.66e-03	8.26e-03	-8.07e-03	-5.69e-05	2.93e-05	3.12e-06
89	13	6.24e-03	9.96e-03	-9.60e-03	-6.72e-05	4.82e-05	1.53e-06
89	14	6.27e-03	0.01	-9.59e-03	-6.80e-05	4.91e-05	1.39e-06
89	15	0.09	0.03	-0.01	-1.39e-04	2.82e-04	-1.29e-05
89	16	0.10	-0.03	-0.02	7.80e-05	3.07e-04	-6.74e-05
89	17	-0.09	0.05	1.28e-03	-2.03e-04	-2.28e-04	7.19e-05
89	18	-0.08	-0.01	-5.89e-03	1.44e-05	-2.02e-04	1.74e-05
89	19	0.10	0.02	-0.01	-1.17e-04	2.82e-04	-2.30e-05
89	20	0.09	-0.02	-0.02	5.58e-05	3.07e-04	-5.72e-05
89	21	-0.08	0.04	9.11e-04	-1.81e-04	-2.28e-04	6.17e-05
89	22	-0.08	-6.51e-03	-5.51e-03	-7.78e-06	-2.02e-04	2.76e-05
89	23	0.07	0.02	-0.01	-1.01e-04	2.31e-04	-3.89e-05
89	24	0.08	-0.04	-0.02	1.16e-04	2.57e-04	-9.34e-05
89	25	-0.07	0.06	1.52e-03	-2.41e-04	-1.77e-04	9.80e-05
89	26	-0.06	-1.29e-03	-5.65e-03	-2.39e-05	-1.52e-04	4.35e-05
89	27	0.08	0.01	-0.01	-7.87e-05	2.31e-04	-4.91e-05
89	28	0.07	-0.03	-0.02	9.41e-05	2.57e-04	-8.32e-05
89	29	-0.06	0.05	1.14e-03	-2.19e-04	-1.77e-04	8.78e-05
89	30	-0.07	5.09e-03	-5.28e-03	-4.61e-05	-1.52e-04	5.36e-05
89	31	0.01	0.11	9.99e-04	-4.15e-04	7.37e-05	8.04e-05
89	32	0.05	-0.09	-0.02	3.09e-04	1.59e-04	-1.01e-04
89	33	-0.04	0.11	4.99e-03	-4.34e-04	-7.91e-05	1.06e-04
89	34	-3.08e-03	-0.09	-0.02	2.90e-04	5.85e-06	-7.59e-05
89	35	8.68e-03	0.10	9.29e-04	-4.04e-04	5.86e-05	7.26e-05
89	36	0.04	-0.10	-0.02	3.21e-04	1.44e-04	-1.09e-04
89	37	-0.03	0.12	5.06e-03	-4.46e-04	-6.40e-05	1.14e-04
89	38	2.40e-03	-0.09	-0.02	2.79e-04	2.09e-05	-6.80e-05
89	39	0.04	0.09	-2.38e-04	-3.41e-04	7.41e-05	4.65e-05
89	40	0.02	-0.07	-0.02	2.35e-04	1.58e-04	-6.73e-05
89	41	-8.38e-03	0.09	3.75e-03	-3.60e-04	-7.87e-05	7.19e-05
89	42	-0.03	-0.07	-0.02	2.16e-04	5.38e-06	-4.19e-05
89	43	0.04	0.08	-3.08e-04	-3.29e-04	5.90e-05	3.86e-05
89	44	0.01	-0.08	-0.02	2.47e-04	1.43e-04	-7.52e-05
89	45	-2.90e-03	0.09	3.82e-03	-3.72e-04	-6.36e-05	7.97e-05

89	46	-0.03	-0.06	-0.02	2.05e-04	2.05e-05	-3.41e-05
89	47	-0.11	0.03	1.57e-03	-1.42e-04	-3.04e-04	8.31e-05
89	48	0.12	-0.01	-0.02	1.67e-05	3.83e-04	-7.85e-05
89	49	-3.28e-04	-0.14	-0.03	4.57e-04	6.29e-05	-1.14e-04
89	50	0.01	0.15	9.09e-03	-5.82e-04	1.66e-05	1.19e-04
90	1	6.46e-03	0.01	-0.01	2.97e-05	-9.60e-06	1.66e-05
90	2	6.47e-03	0.01	-0.01	2.99e-05	-9.24e-06	1.66e-05
90	3	8.79e-03	0.01	-0.01	2.17e-05	-3.43e-05	3.08e-05
90	4	8.80e-03	0.01	-0.01	2.19e-05	-3.39e-05	3.07e-05
90	5	4.68e-03	8.06e-03	-8.69e-03	2.35e-05	-6.56e-06	1.16e-05
90	6	4.70e-03	8.10e-03	-8.72e-03	2.38e-05	-6.19e-06	1.16e-05
90	7	7.01e-03	0.01	-0.01	1.55e-05	-3.12e-05	2.58e-05
90	8	7.03e-03	0.01	-0.01	1.58e-05	-3.08e-05	2.57e-05
90	9	6.49e-03	0.01	-0.01	3.02e-05	-8.87e-06	1.65e-05
90	10	8.09e-03	0.01	-0.01	2.41e-05	-2.69e-05	2.65e-05
90	11	8.12e-03	0.01	-0.01	2.46e-05	-2.61e-05	2.64e-05
90	12	4.71e-03	8.14e-03	-8.76e-03	2.41e-05	-5.82e-06	1.15e-05
90	13	6.31e-03	9.89e-03	-9.98e-03	1.79e-05	-2.38e-05	2.15e-05
90	14	6.35e-03	9.96e-03	-0.01	1.85e-05	-2.31e-05	2.14e-05
90	15	0.09	0.03	-4.17e-03	3.16e-06	2.58e-04	-6.03e-06
90	16	0.10	-0.04	-2.44e-03	7.35e-05	2.93e-04	-1.63e-05
90	17	-0.09	0.05	-0.02	-3.29e-05	-3.26e-04	5.08e-05
90	18	-0.08	-7.45e-03	-0.01	3.75e-05	-2.90e-04	4.06e-05
90	19	0.10	0.02	-4.26e-03	1.06e-05	2.88e-04	-1.38e-05
90	20	0.09	-0.03	-2.35e-03	6.61e-05	2.62e-04	-8.50e-06
90	21	-0.08	0.05	-0.02	-2.54e-05	-2.95e-04	4.31e-05
90	22	-0.08	-4.64e-04	-0.01	3.01e-05	-3.21e-04	4.84e-05
90	23	0.07	3.70e-03	-4.82e-03	2.99e-05	1.99e-04	-2.64e-05
90	24	0.08	-0.06	-3.08e-03	1.00e-04	2.34e-04	-3.66e-05
90	25	-0.07	0.08	-0.02	-5.96e-05	-2.67e-04	7.12e-05
90	26	-0.06	0.01	-0.01	1.08e-05	-2.32e-04	6.09e-05
90	27	0.08	-3.29e-03	-4.91e-03	3.73e-05	2.30e-04	-3.42e-05
90	28	0.07	-0.05	-3.00e-03	9.29e-05	2.03e-04	-2.89e-05
90	29	-0.06	0.07	-0.02	-5.22e-05	-2.36e-04	6.34e-05
90	30	-0.07	0.02	-0.01	3.35e-06	-2.63e-04	6.87e-05
90	31	0.01	0.11	-0.01	-9.16e-05	1.23e-05	2.58e-05
90	32	0.05	-0.10	-4.69e-03	1.43e-04	1.30e-04	-8.35e-06
90	33	-0.04	0.12	-0.01	-1.02e-04	-1.63e-04	4.29e-05
90	34	-3.26e-03	-0.09	-8.37e-03	1.32e-04	-4.51e-05	8.71e-06
90	35	9.02e-03	0.10	-0.01	-8.35e-05	-5.34e-06	1.97e-05
90	36	0.04	-0.11	-4.89e-03	1.51e-04	1.12e-04	-1.45e-05
90	37	-0.03	0.12	-0.01	-1.10e-04	-1.45e-04	4.90e-05
90	38	2.21e-03	-0.08	-8.17e-03	1.24e-04	-2.75e-05	1.48e-05
90	39	0.04	0.09	-0.01	-6.68e-05	1.15e-04	0.0
90	40	0.02	-0.08	-4.42e-03	1.18e-04	2.71e-05	1.76e-05
90	41	-8.16e-03	0.09	-0.01	-7.76e-05	-5.99e-05	1.70e-05
90	42	-0.03	-0.07	-8.09e-03	1.07e-04	-1.48e-04	3.47e-05
90	43	0.04	0.08	-0.01	-5.88e-05	9.74e-05	-6.21e-06
90	44	0.01	-0.08	-4.61e-03	1.26e-04	9.46e-06	1.15e-05
90	45	-2.69e-03	0.10	-0.01	-8.56e-05	-4.23e-05	2.31e-05
90	46	-0.03	-0.06	-7.90e-03	9.95e-05	-1.30e-04	4.08e-05
90	47	-0.11	0.05	-0.02	-3.18e-05	-4.12e-04	7.69e-05
90	48	0.12	-0.03	-5.46e-04	7.25e-05	3.79e-04	-4.24e-05
90	49	6.86e-05	-0.14	-4.76e-03	1.88e-04	-3.35e-05	8.29e-06
90	50	0.01	0.16	-0.01	-1.47e-04	0.0	2.63e-05
91	1	0.02	0.03	-0.05	-1.19e-05	3.47e-05	2.81e-05
91	2	0.02	0.03	-0.05	-1.41e-05	3.54e-05	2.84e-05
91	3	0.02	0.04	-0.06	-1.79e-05	3.76e-05	3.63e-05
91	4	0.02	0.04	-0.06	-2.01e-05	3.82e-05	3.67e-05
91	5	0.01	0.02	-0.04	-1.46e-05	2.49e-05	1.85e-05
91	6	0.01	0.02	-0.04	-1.67e-05	2.55e-05	1.89e-05
91	7	0.02	0.03	-0.04	-2.05e-05	2.77e-05	2.68e-05
91	8	0.02	0.03	-0.04	-2.27e-05	2.84e-05	2.71e-05
91	9	0.02	0.03	-0.05	-1.63e-05	3.60e-05	2.87e-05
91	10	0.02	0.04	-0.05	-1.61e-05	3.67e-05	3.39e-05
91	11	0.02	0.04	-0.06	-2.04e-05	3.81e-05	3.45e-05
91	12	0.01	0.02	-0.04	-1.89e-05	2.62e-05	1.92e-05
91	13	0.02	0.03	-0.04	-1.87e-05	2.69e-05	2.43e-05
91	14	0.02	0.03	-0.04	-2.31e-05	2.82e-05	2.50e-05
91	15	0.18	0.08	-0.04	-9.99e-05	6.67e-05	-7.82e-06
91	16	0.15	-9.49e-03	-0.04	3.72e-05	5.97e-05	-2.95e-05
91	17	-0.12	0.06	-0.04	-7.11e-05	-7.67e-06	7.31e-05
91	18	-0.15	-0.03	-0.03	6.60e-05	-1.47e-05	5.15e-05
91	19	0.16	0.09	-0.04	-1.11e-04	6.50e-05	-1.48e-05
91	20	0.17	-0.01	-0.04	4.82e-05	6.14e-05	-2.25e-05
91	21	-0.14	0.07	-0.04	-8.21e-05	-9.38e-06	6.61e-05
91	22	-0.13	-0.03	-0.03	7.70e-05	-1.30e-05	5.85e-05

91	23	0.14	0.09	-0.04	-1.15e-04	5.70e-05	-3.45e-05
91	24	0.11	-2.52e-04	-0.04	2.25e-05	5.00e-05	-5.61e-05
91	25	-0.09	0.05	-0.04	-5.64e-05	2.05e-06	9.98e-05
91	26	-0.11	-0.04	-0.03	8.07e-05	-5.00e-06	7.82e-05
91	27	0.12	0.10	-0.04	-1.26e-04	5.53e-05	-4.15e-05
91	28	0.13	-5.70e-03	-0.04	3.35e-05	5.17e-05	-4.91e-05
91	29	-0.11	0.06	-0.04	-6.74e-05	0.0	9.28e-05
91	30	-0.09	-0.04	-0.03	9.17e-05	-3.29e-06	8.52e-05
91	31	0.10	0.18	-0.05	-2.50e-04	4.89e-05	4.58e-05
91	32	0.02	-0.12	-0.03	2.07e-04	2.54e-05	-2.64e-05
91	33	6.94e-03	0.17	-0.05	-2.41e-04	2.66e-05	7.01e-05
91	34	-0.07	-0.13	-0.03	2.16e-04	3.09e-06	-2.10e-06
91	35	0.09	0.18	-0.05	-2.54e-04	4.60e-05	3.78e-05
91	36	0.01	-0.12	-0.03	2.03e-04	2.25e-05	-3.44e-05
91	37	0.02	0.17	-0.05	-2.37e-04	2.95e-05	7.81e-05
91	38	-0.06	-0.13	-0.03	2.20e-04	6.01e-06	5.90e-06
91	39	0.03	0.20	-0.05	-2.86e-04	4.32e-05	2.24e-05
91	40	0.09	-0.14	-0.03	2.44e-04	3.11e-05	-3.06e-06
91	41	-0.06	0.19	-0.05	-2.78e-04	2.09e-05	4.67e-05
91	42	-1.57e-03	-0.14	-0.03	2.53e-04	8.79e-06	2.12e-05
91	43	0.02	0.20	-0.05	-2.91e-04	4.03e-05	1.44e-05
91	44	0.08	-0.14	-0.03	2.39e-04	2.82e-05	-1.11e-05
91	45	-0.05	0.19	-0.05	-2.73e-04	2.38e-05	5.47e-05
91	46	9.88e-03	-0.15	-0.03	2.57e-04	1.17e-05	2.92e-05
91	47	-0.18	5.18e-03	-0.04	1.76e-05	-2.21e-05	1.09e-04
91	48	0.21	0.05	-0.04	-5.15e-05	7.41e-05	-6.58e-05
91	49	0.03	-0.23	-0.03	3.76e-04	2.04e-05	0.0
91	50	3.48e-03	0.28	-0.05	-4.10e-04	3.16e-05	4.46e-05
92	1	0.01	0.03	-0.02	-6.53e-05	6.74e-05	3.21e-05
92	2	0.01	0.03	-0.02	-6.58e-05	6.77e-05	3.21e-05
92	3	0.02	0.04	-0.02	-7.83e-05	6.79e-05	3.73e-05
92	4	0.02	0.04	-0.02	-7.89e-05	6.82e-05	3.73e-05
92	5	9.81e-03	0.02	-0.02	-4.77e-05	4.74e-05	2.30e-05
92	6	9.95e-03	0.02	-0.02	-4.82e-05	4.77e-05	2.30e-05
92	7	0.01	0.03	-0.02	-6.07e-05	4.79e-05	2.82e-05
92	8	0.01	0.03	-0.02	-6.13e-05	4.82e-05	2.82e-05
92	9	0.01	0.03	-0.02	-6.64e-05	6.80e-05	3.21e-05
92	10	0.02	0.04	-0.02	-7.44e-05	6.78e-05	3.57e-05
92	11	0.02	0.04	-0.02	-7.55e-05	6.84e-05	3.57e-05
92	12	0.01	0.02	-0.02	-4.88e-05	4.80e-05	2.30e-05
92	13	0.01	0.03	-0.02	-5.68e-05	4.78e-05	2.67e-05
92	14	0.01	0.03	-0.02	-5.79e-05	4.84e-05	2.67e-05
92	15	0.18	0.07	-0.03	-1.74e-04	3.47e-04	1.23e-04
92	16	0.20	-0.04	-0.02	3.01e-05	3.73e-04	9.41e-05
92	17	-0.17	0.09	-0.01	-1.36e-04	-2.78e-04	-4.39e-05
92	18	-0.16	-0.01	-5.67e-03	6.78e-05	-2.52e-04	-7.27e-05
92	19	0.18	0.06	-0.03	-1.60e-04	3.70e-04	9.96e-05
92	20	0.20	-0.03	-0.02	1.68e-05	3.50e-04	1.17e-04
92	21	-0.17	0.08	-0.01	-1.23e-04	-2.55e-04	-6.71e-05
92	22	-0.16	-4.22e-03	-5.98e-03	5.45e-05	-2.75e-04	-4.95e-05
92	23	0.21	0.04	-0.02	-7.06e-05	3.32e-04	-2.91e-05
92	24	0.23	-0.07	-0.02	1.33e-04	3.58e-04	-5.79e-05
92	25	-0.20	0.12	-0.01	-2.39e-04	-2.63e-04	1.08e-04
92	26	-0.19	8.06e-03	-8.33e-03	-3.51e-05	-2.37e-04	7.93e-05
92	27	0.21	0.03	-0.02	-5.73e-05	3.55e-04	-5.23e-05
92	28	0.22	-0.05	-0.02	1.20e-04	3.35e-04	-3.47e-05
92	29	-0.20	0.11	-0.01	-2.25e-04	-2.40e-04	8.48e-05
92	30	-0.19	0.02	-8.64e-03	-4.85e-05	-2.60e-04	1.03e-04
92	31	0.04	0.20	-0.03	-3.98e-04	9.81e-05	9.81e-05
92	32	0.09	-0.16	-8.09e-03	2.81e-04	1.84e-04	2.13e-06
92	33	-0.07	0.21	-0.02	-3.87e-04	-8.93e-05	4.81e-05
92	34	-0.02	-0.15	-3.64e-03	2.92e-04	-2.89e-06	-4.79e-05
92	35	0.05	0.20	-0.03	-3.67e-04	9.37e-05	5.25e-05
92	36	0.10	-0.17	-7.29e-03	3.12e-04	1.80e-04	-4.35e-05
92	37	-0.08	0.22	-0.03	-4.18e-04	-8.48e-05	9.37e-05
92	38	-0.02	-0.14	-4.43e-03	2.61e-04	1.53e-06	-2.30e-06
92	39	0.04	0.17	-0.03	-3.54e-04	1.74e-04	2.06e-05
92	40	0.09	-0.12	-9.13e-03	2.36e-04	1.08e-04	7.96e-05
92	41	-0.06	0.17	-0.02	-3.42e-04	-1.31e-05	-2.94e-05
92	42	-0.02	-0.12	-4.68e-03	2.48e-04	-7.91e-05	2.96e-05
92	43	0.05	0.16	-0.03	-3.23e-04	1.70e-04	-2.50e-05
92	44	0.10	-0.13	-8.33e-03	2.67e-04	1.04e-04	3.40e-05
92	45	-0.07	0.18	-0.02	-3.73e-04	-8.66e-06	1.62e-05
92	46	-0.03	-0.11	-5.48e-03	2.17e-04	-7.47e-05	7.52e-05
92	47	-0.29	0.07	-7.10e-03	-1.34e-04	-4.25e-04	-6.37e-05
92	48	0.31	-0.01	-0.03	2.81e-05	5.20e-04	1.14e-04
92	49	0.02	-0.24	-5.45e-04	4.54e-04	2.70e-05	4.67e-06

92	50	2.68e-03	0.29	-0.03	-5.60e-04	6.82e-05	4.55e-05
93	1	0.01	0.01	-8.49e-03	-2.94e-05	1.19e-04	-2.09e-05
93	2	0.01	0.01	-8.48e-03	-2.98e-05	1.19e-04	-2.10e-05
93	3	0.02	0.01	-0.01	-7.19e-06	1.77e-04	-2.60e-05
93	4	0.02	0.01	-0.01	-7.54e-06	1.77e-04	-2.61e-05
93	5	9.16e-03	8.19e-03	-6.01e-03	-2.26e-05	8.26e-05	-1.54e-05
93	6	9.19e-03	8.22e-03	-6.00e-03	-2.30e-05	8.27e-05	-1.55e-05
93	7	0.02	0.01	-9.44e-03	0.0	1.41e-04	-2.04e-05
93	8	0.02	0.01	-9.43e-03	0.0	1.41e-04	-2.06e-05
93	9	0.01	0.01	-8.48e-03	-3.01e-05	1.19e-04	-2.12e-05
93	10	0.02	0.01	-0.01	-1.39e-05	1.60e-04	-2.44e-05
93	11	0.02	0.01	-0.01	-1.46e-05	1.60e-04	-2.48e-05
93	12	9.22e-03	8.24e-03	-6.00e-03	-2.33e-05	8.27e-05	-1.57e-05
93	13	0.01	9.88e-03	-8.41e-03	-7.02e-06	1.24e-04	-1.89e-05
93	14	0.01	9.93e-03	-8.39e-03	-7.73e-06	1.24e-04	-1.92e-05
93	15	0.12	0.05	-0.02	-1.28e-04	5.90e-04	-7.08e-05
93	16	0.13	1.43e-03	-0.02	1.61e-05	6.29e-04	-8.26e-05
93	17	-0.11	0.02	5.51e-03	-4.35e-05	-4.17e-04	4.78e-05
93	18	-0.10	-0.03	1.92e-03	1.00e-04	-3.78e-04	3.61e-05
93	19	0.12	0.06	-0.02	-1.53e-04	5.81e-04	-6.86e-05
93	20	0.13	-6.88e-03	-0.02	4.14e-05	6.38e-04	-8.49e-05
93	21	-0.11	0.03	6.61e-03	-6.88e-05	-4.26e-04	5.01e-05
93	22	-0.10	-0.04	8.17e-04	1.26e-04	-3.69e-04	3.38e-05
93	23	0.12	0.07	-0.02	-1.93e-04	5.61e-04	-9.63e-05
93	24	0.13	0.02	-0.02	-4.94e-05	6.00e-04	-1.08e-04
93	25	-0.10	-2.66e-03	4.15e-03	2.20e-05	-3.88e-04	7.33e-05
93	26	-0.09	-0.05	5.54e-04	1.66e-04	-3.49e-04	6.15e-05
93	27	0.11	0.07	-0.01	-2.19e-04	5.52e-04	-9.40e-05
93	28	0.13	0.01	-0.02	-2.41e-05	6.10e-04	-1.10e-04
93	29	-0.10	5.65e-03	5.25e-03	-3.31e-06	-3.98e-04	7.55e-05
93	30	-0.09	-0.06	-5.47e-04	1.91e-04	-3.40e-04	5.92e-05
93	31	0.03	0.09	-4.72e-03	-2.66e-04	1.92e-04	-1.56e-05
93	32	0.06	-0.06	-0.02	2.13e-04	3.22e-04	-5.48e-05
93	33	-0.04	0.08	1.93e-03	-2.41e-04	-1.10e-04	2.00e-05
93	34	-7.72e-03	-0.07	-0.01	2.39e-04	1.99e-05	-1.92e-05
93	35	0.03	0.10	-4.32e-03	-2.86e-04	1.83e-04	-2.32e-05
93	36	0.06	-0.06	-0.02	1.94e-04	3.13e-04	-6.24e-05
93	37	-0.04	0.07	1.52e-03	-2.21e-04	-1.01e-04	2.76e-05
93	38	-5.34e-03	-0.08	-0.01	2.58e-04	2.86e-05	-1.15e-05
93	39	0.03	0.12	-1.05e-03	-3.51e-04	1.61e-04	-8.05e-06
93	40	0.07	-0.09	-0.02	2.98e-04	3.53e-04	-6.23e-05
93	41	-0.04	0.11	5.60e-03	-3.25e-04	-1.41e-04	2.76e-05
93	42	-3.07e-03	-0.10	-0.01	3.23e-04	5.10e-05	-2.67e-05
93	43	0.02	0.12	-6.45e-04	-3.70e-04	1.52e-04	-1.57e-05
93	44	0.06	-0.08	-0.02	2.78e-04	3.44e-04	-7.00e-05
93	45	-0.04	0.10	5.19e-03	-3.06e-04	-1.32e-04	3.52e-05
93	46	-6.98e-04	-0.11	-0.01	3.43e-04	5.96e-05	-1.91e-05
93	47	-0.15	-0.03	7.17e-03	1.10e-04	-6.07e-04	7.42e-05
93	48	0.18	0.05	-0.02	-1.38e-04	8.19e-04	-1.09e-04
93	49	0.02	-0.13	-0.02	4.29e-04	1.71e-04	-4.80e-05
93	50	-3.21e-04	0.15	4.55e-03	-4.56e-04	4.14e-05	1.32e-05
94	1	4.87e-03	8.25e-03	-0.01	-3.68e-05	3.24e-05	-3.79e-05
94	2	4.92e-03	8.29e-03	-0.01	-3.72e-05	3.26e-05	-3.80e-05
94	3	9.63e-03	9.89e-03	-0.01	-4.94e-05	7.08e-05	-5.02e-05
94	4	9.68e-03	9.93e-03	-0.01	-4.97e-05	7.10e-05	-5.04e-05
94	5	3.64e-03	6.06e-03	-8.91e-03	-2.71e-05	2.18e-05	-2.79e-05
94	6	3.69e-03	6.10e-03	-8.91e-03	-2.74e-05	2.19e-05	-2.80e-05
94	7	8.40e-03	7.70e-03	-0.01	-3.96e-05	6.02e-05	-4.02e-05
94	8	8.45e-03	7.74e-03	-0.01	-3.99e-05	6.04e-05	-4.04e-05
94	9	4.97e-03	8.32e-03	-0.01	-3.75e-05	3.28e-05	-3.82e-05
94	10	8.20e-03	9.40e-03	-0.01	-4.56e-05	5.93e-05	-4.65e-05
94	11	8.30e-03	9.47e-03	-0.01	-4.62e-05	5.97e-05	-4.69e-05
94	12	3.74e-03	6.13e-03	-8.92e-03	-2.77e-05	2.21e-05	-2.82e-05
94	13	6.97e-03	7.21e-03	-0.01	-3.58e-05	4.87e-05	-3.65e-05
94	14	7.08e-03	7.28e-03	-0.01	-3.65e-05	4.90e-05	-3.69e-05
94	15	0.16	0.02	-0.02	-6.68e-05	6.34e-04	-3.06e-04
94	16	0.14	-0.02	-0.02	3.95e-05	5.62e-04	-1.47e-04
94	17	-0.13	0.03	1.40e-04	-1.04e-04	-4.87e-04	8.13e-05
94	18	-0.15	-3.47e-03	3.04e-03	2.64e-06	-5.60e-04	2.40e-04
94	19	0.16	0.02	-0.02	-8.52e-05	6.18e-04	-3.24e-04
94	20	0.14	-0.02	-0.02	5.79e-05	5.78e-04	-1.29e-04
94	21	-0.13	0.04	3.61e-04	-1.22e-04	-5.04e-04	6.36e-05
94	22	-0.15	-9.78e-03	2.82e-03	2.10e-05	-5.44e-04	2.58e-04
94	23	0.15	0.03	-0.02	-1.18e-04	5.70e-04	-3.43e-04
94	24	0.13	-1.06e-03	-0.02	-1.18e-05	4.97e-04	-1.84e-04
94	25	-0.12	0.01	-7.80e-04	-5.23e-05	-4.22e-04	1.18e-04
94	26	-0.14	-0.02	2.12e-03	5.39e-05	-4.95e-04	2.77e-04

94	27	0.15	0.04	-0.02	-1.36e-04	5.53e-04	-3.60e-04
94	28	0.13	-7.36e-03	-0.02	6.59e-06	5.13e-04	-1.66e-04
94	29	-0.12	0.02	-5.59e-04	-7.07e-05	-4.39e-04	1.00e-04
94	30	-0.14	-0.03	1.90e-03	7.23e-05	-4.79e-04	2.95e-04
94	31	0.09	0.06	-0.02	-2.04e-04	3.27e-04	-3.56e-04
94	32	0.01	-0.05	-8.49e-03	1.51e-04	8.39e-05	1.74e-04
94	33	7.91e-04	0.07	-0.01	-2.15e-04	-9.65e-06	-2.39e-04
94	34	-0.08	-0.05	-1.60e-03	1.40e-04	-2.53e-04	2.90e-04
94	35	0.08	0.07	-0.02	-2.19e-04	3.07e-04	-3.67e-04
94	36	6.39e-03	-0.05	-8.21e-03	1.35e-04	6.45e-05	1.63e-04
94	37	4.70e-03	0.06	-0.01	-1.99e-04	9.82e-06	-2.28e-04
94	38	-0.07	-0.05	-1.88e-03	1.55e-04	-2.33e-04	3.01e-04
94	39	0.07	0.08	-0.02	-2.65e-04	2.72e-04	-4.15e-04
94	40	0.03	-0.07	-9.22e-03	2.12e-04	1.39e-04	2.33e-04
94	41	-0.01	0.09	-0.01	-2.76e-04	-6.48e-05	-2.99e-04
94	42	-0.06	-0.07	-2.34e-03	2.01e-04	-1.97e-04	3.49e-04
94	43	0.07	0.09	-0.02	-2.80e-04	2.52e-04	-4.26e-04
94	44	0.02	-0.07	-8.95e-03	1.97e-04	1.20e-04	2.22e-04
94	45	-0.01	0.08	-0.01	-2.61e-04	-4.53e-05	-2.88e-04
94	46	-0.06	-0.08	-2.62e-03	2.16e-04	-1.78e-04	3.60e-04
94	47	-0.20	0.02	6.77e-03	-6.74e-05	-7.62e-04	2.63e-04
94	48	0.21	-4.04e-03	-0.03	3.23e-06	8.36e-04	-3.29e-04
94	49	-0.04	-0.10	-2.98e-03	2.96e-04	-5.17e-05	4.33e-04
94	50	0.05	0.11	-0.02	-3.60e-04	1.26e-04	-4.99e-04
95	1	6.80e-03	9.13e-03	-0.01	-4.01e-05	3.42e-05	-4.26e-05
95	2	6.87e-03	9.16e-03	-0.01	-4.04e-05	3.44e-05	-4.28e-05
95	3	0.01	0.01	-0.01	-5.23e-05	6.84e-05	-5.48e-05
95	4	0.01	0.01	-0.01	-5.27e-05	6.86e-05	-5.50e-05
95	5	5.09e-03	6.68e-03	-8.73e-03	-2.94e-05	2.35e-05	-3.13e-05
95	6	5.16e-03	6.72e-03	-8.74e-03	-2.97e-05	2.37e-05	-3.15e-05
95	7	9.67e-03	8.67e-03	-0.01	-4.16e-05	5.76e-05	-4.36e-05
95	8	9.74e-03	8.71e-03	-0.01	-4.19e-05	5.79e-05	-4.38e-05
95	9	6.94e-03	9.20e-03	-0.01	-4.08e-05	3.47e-05	-4.30e-05
95	10	1.00e-02	0.01	-0.01	-4.87e-05	5.81e-05	-5.11e-05
95	11	0.01	0.01	-0.01	-4.94e-05	5.86e-05	-5.16e-05
95	12	5.23e-03	6.76e-03	-8.75e-03	-3.00e-05	2.40e-05	-3.18e-05
95	13	8.29e-03	8.08e-03	-0.01	-3.79e-05	4.74e-05	-3.99e-05
95	14	8.44e-03	8.15e-03	-0.01	-3.86e-05	4.79e-05	-4.03e-05
95	15	0.16	0.02	-0.02	-6.87e-05	6.30e-04	-3.11e-04
95	16	0.13	-0.03	-0.02	7.31e-05	5.51e-04	-1.04e-04
95	17	-0.12	0.04	-2.14e-04	-1.42e-04	-4.77e-04	3.17e-05
95	18	-0.15	-7.53e-03	3.41e-03	0.0	-5.56e-04	2.38e-04
95	19	0.15	0.02	-0.02	-5.52e-05	6.10e-04	-2.85e-04
95	20	0.14	-0.02	-0.02	5.95e-05	5.71e-04	-1.30e-04
95	21	-0.13	0.04	6.18e-04	-1.28e-04	-4.97e-04	5.75e-05
95	22	-0.14	-2.65e-03	2.57e-03	-1.33e-05	-5.36e-04	2.12e-04
95	23	0.14	0.01	-0.02	-4.50e-05	5.51e-04	-2.66e-04
95	24	0.11	-0.04	-0.02	9.68e-05	4.71e-04	-5.95e-05
95	25	-0.10	0.05	-2.25e-03	-1.65e-04	-3.97e-04	-1.29e-05
95	26	-0.13	2.02e-03	1.37e-03	-2.35e-05	-4.76e-04	1.94e-04
95	27	0.13	8.05e-03	-0.02	-3.15e-05	5.30e-04	-2.40e-04
95	28	0.12	-0.03	-0.02	8.32e-05	4.91e-04	-8.53e-05
95	29	-0.11	0.05	-1.42e-03	-1.52e-04	-4.17e-04	1.28e-05
95	30	-0.12	6.91e-03	5.40e-04	-3.70e-05	-4.56e-04	1.68e-04
95	31	0.09	0.08	-0.02	-2.60e-04	3.36e-04	-4.32e-04
95	32	4.45e-03	-0.08	-6.91e-03	2.13e-04	7.07e-05	2.57e-04
95	33	9.40e-03	0.09	-0.01	-2.82e-04	3.57e-06	-3.29e-04
95	34	-0.08	-0.07	-2.00e-04	1.91e-04	-2.61e-04	3.59e-04
95	35	0.09	0.08	-0.02	-2.53e-04	3.12e-04	-4.18e-04
95	36	-1.95e-03	-0.08	-6.30e-03	2.20e-04	4.67e-05	2.70e-04
95	37	0.02	0.09	-0.01	-2.89e-04	2.75e-05	-3.42e-04
95	38	-0.07	-0.07	-8.11e-04	1.84e-04	-2.37e-04	3.46e-04
95	39	0.07	0.07	-0.02	-2.14e-04	2.68e-04	-3.46e-04
95	40	0.03	-0.06	-9.68e-03	1.68e-04	1.38e-04	1.71e-04
95	41	-0.01	0.07	-9.49e-03	-2.36e-04	-6.39e-05	-2.43e-04
95	42	-0.06	-0.05	-2.97e-03	1.46e-04	-1.94e-04	2.73e-04
95	43	0.06	0.07	-0.02	-2.07e-04	2.44e-04	-3.32e-04
95	44	0.02	-0.06	-9.07e-03	1.75e-04	1.14e-04	1.84e-04
95	45	-8.41e-03	0.08	-0.01	-2.43e-04	-3.99e-05	-2.57e-04
95	46	-0.05	-0.05	-3.58e-03	1.39e-04	-1.70e-04	2.60e-04
95	47	-0.18	0.03	5.57e-03	-1.10e-04	-7.36e-04	1.49e-04
95	48	0.20	-0.01	-0.02	4.13e-05	8.10e-04	-2.22e-04
95	49	-0.03	-0.11	-2.48e-03	3.07e-04	-5.19e-05	4.46e-04
95	50	0.05	0.12	-0.02	-3.76e-04	1.26e-04	-5.18e-04
96	1	3.65e-03	0.01	-9.90e-03	-3.54e-05	-3.35e-05	4.30e-06
96	2	3.72e-03	0.01	-9.88e-03	-3.58e-05	-3.31e-05	4.28e-06
96	3	1.58e-03	0.01	-0.01	-1.53e-05	-6.79e-05	1.15e-05

96	4	1.65e-03	0.01	-0.01	-1.58e-05	-6.75e-05	1.15e-05
96	5	2.91e-03	8.87e-03	-7.09e-03	-2.68e-05	-2.05e-05	2.36e-06
96	6	2.99e-03	8.91e-03	-7.07e-03	-2.72e-05	-2.01e-05	2.33e-06
96	7	8.42e-04	0.01	-0.01	-6.73e-06	-5.49e-05	9.60e-06
96	8	9.16e-04	0.01	-0.01	-7.18e-06	-5.44e-05	9.57e-06
96	9	3.80e-03	0.01	-9.86e-03	-3.63e-05	-3.27e-05	4.25e-06
96	10	2.20e-03	0.01	-0.01	-2.13e-05	-5.76e-05	9.37e-06
96	11	2.35e-03	0.01	-0.01	-2.22e-05	-5.67e-05	9.32e-06
96	12	3.06e-03	8.95e-03	-7.05e-03	-2.77e-05	-1.97e-05	2.31e-06
96	13	1.46e-03	0.01	-9.38e-03	-1.27e-05	-4.46e-05	7.43e-06
96	14	1.61e-03	0.01	-9.34e-03	-1.36e-05	-4.37e-05	7.38e-06
96	15	0.11	0.03	4.62e-03	-7.47e-05	4.75e-04	-1.04e-04
96	16	0.12	-0.04	-1.53e-04	1.02e-04	4.32e-04	-9.00e-05
96	17	-0.12	0.06	-0.02	-1.39e-04	-5.01e-04	1.00e-04
96	18	-0.11	-7.57e-03	-0.02	3.72e-05	-5.44e-04	1.14e-04
96	19	0.11	0.02	3.72e-03	-5.52e-05	4.74e-04	-9.02e-05
96	20	0.12	-0.03	7.51e-04	8.22e-05	4.34e-04	-1.03e-04
96	21	-0.12	0.05	-0.02	-1.20e-04	-5.02e-04	1.14e-04
96	22	-0.11	-5.99e-05	-0.02	1.77e-05	-5.42e-04	1.01e-04
96	23	0.11	4.02e-03	3.30e-03	-1.14e-05	4.49e-04	-1.33e-04
96	24	0.11	-0.06	-1.48e-03	1.65e-04	4.06e-04	-1.20e-04
96	25	-0.11	0.08	-0.02	-2.03e-04	-4.74e-04	1.30e-04
96	26	-0.10	0.02	-0.02	-2.61e-05	-5.17e-04	1.44e-04
96	27	0.10	-3.49e-03	2.39e-03	8.10e-06	4.47e-04	-1.20e-04
96	28	0.12	-0.05	-5.74e-04	1.46e-04	4.07e-04	-1.33e-04
96	29	-0.11	0.07	-0.02	-1.83e-04	-4.76e-04	1.44e-04
96	30	-0.10	0.02	-0.02	-4.56e-05	-5.16e-04	1.30e-04
96	31	0.02	0.11	2.75e-03	-3.03e-04	1.83e-04	-4.83e-05
96	32	0.05	-0.10	-0.01	2.85e-04	4.10e-05	-2.46e-06
96	33	-0.05	0.12	-3.63e-03	-3.23e-04	-1.10e-04	1.30e-05
96	34	-0.02	-0.09	-0.02	2.66e-04	-2.52e-04	5.88e-05
96	35	0.02	0.11	2.35e-03	-2.84e-04	1.75e-04	-5.72e-05
96	36	0.05	-0.11	-0.01	3.04e-04	3.31e-05	-1.14e-05
96	37	-0.05	0.13	-3.24e-03	-3.41e-04	-1.02e-04	2.19e-05
96	38	-0.01	-0.09	-0.02	2.47e-04	-2.44e-04	6.77e-05
96	39	0.02	0.09	-2.66e-04	-2.38e-04	1.79e-04	-3.31e-06
96	40	0.05	-0.08	-0.01	2.20e-04	4.48e-05	-4.74e-05
96	41	-0.05	0.10	-6.65e-03	-2.57e-04	-1.13e-04	5.80e-05
96	42	-0.02	-0.07	-0.02	2.01e-04	-2.48e-04	1.38e-05
96	43	0.02	0.08	-6.63e-04	-2.19e-04	1.72e-04	-1.22e-05
96	44	0.05	-0.09	-0.01	2.39e-04	3.69e-05	-5.63e-05
96	45	-0.05	0.11	-6.25e-03	-2.76e-04	-1.05e-04	6.69e-05
96	46	-0.01	-0.06	-0.02	1.82e-04	-2.40e-04	2.27e-05
96	47	-0.16	0.05	-0.02	-1.24e-04	-7.28e-04	1.50e-04
96	48	0.16	-0.03	5.60e-03	8.70e-05	6.59e-04	-1.40e-04
96	49	0.01	-0.14	-0.02	3.98e-04	-7.16e-05	-1.46e-05
96	50	-7.07e-03	0.16	1.70e-03	-4.36e-04	3.11e-06	2.51e-05
97	1	0.02	0.03	-0.05	-2.25e-05	1.61e-05	4.38e-05
97	2	0.02	0.03	-0.05	-2.49e-05	1.54e-05	4.31e-05
97	3	0.02	0.04	-0.05	-3.04e-05	1.53e-05	5.02e-05
97	4	0.02	0.04	-0.06	-3.27e-05	1.46e-05	4.94e-05
97	5	0.01	0.02	-0.04	-2.14e-05	1.17e-05	3.08e-05
97	6	0.01	0.03	-0.04	-2.37e-05	1.10e-05	3.00e-05
97	7	0.02	0.03	-0.04	-2.92e-05	1.09e-05	3.71e-05
97	8	0.02	0.03	-0.04	-3.16e-05	1.02e-05	3.63e-05
97	9	0.02	0.03	-0.05	-2.72e-05	1.48e-05	4.23e-05
97	10	0.02	0.04	-0.05	-2.80e-05	1.55e-05	4.83e-05
97	11	0.02	0.04	-0.05	-3.27e-05	1.42e-05	4.67e-05
97	12	0.01	0.03	-0.04	-2.60e-05	1.04e-05	2.93e-05
97	13	0.02	0.03	-0.04	-2.69e-05	1.11e-05	3.52e-05
97	14	0.02	0.03	-0.04	-3.16e-05	9.80e-06	3.37e-05
97	15	0.17	0.07	-0.04	-8.42e-05	4.83e-05	2.64e-06
97	16	0.15	-0.03	-0.03	6.89e-05	4.26e-05	-2.10e-05
97	17	-0.12	0.09	-0.04	-1.18e-04	-1.98e-05	8.76e-05
97	18	-0.15	-0.01	-0.04	3.51e-05	-2.55e-05	6.40e-05
97	19	0.15	0.07	-0.04	-7.90e-05	4.33e-05	-5.43e-06
97	20	0.17	-0.03	-0.04	6.37e-05	4.76e-05	-1.30e-05
97	21	-0.14	0.08	-0.04	-1.13e-04	-2.48e-05	7.96e-05
97	22	-0.13	-9.66e-03	-0.04	2.99e-05	-2.05e-05	7.20e-05
97	23	0.14	0.05	-0.04	-6.76e-05	3.88e-05	-2.78e-05
97	24	0.11	-0.05	-0.03	8.55e-05	3.31e-05	-5.15e-05
97	25	-0.09	0.10	-0.04	-1.34e-04	-1.03e-05	1.18e-04
97	26	-0.11	1.93e-03	-0.04	1.86e-05	-1.61e-05	9.44e-05
97	27	0.12	0.05	-0.04	-6.24e-05	3.38e-05	-3.59e-05
97	28	0.13	-0.04	-0.03	8.03e-05	3.81e-05	-4.34e-05
97	29	-0.11	0.10	-0.04	-1.29e-04	-1.53e-05	1.10e-04
97	30	-0.09	5.43e-03	-0.04	1.34e-05	-1.10e-05	1.02e-04

97	31	0.10	0.19	-0.05	-2.75e-04	3.11e-05	6.00e-05
97	32	0.02	-0.14	-0.03	2.36e-04	1.21e-05	-1.89e-05
97	33	6.25e-03	0.20	-0.05	-2.85e-04	1.07e-05	8.55e-05
97	34	-0.07	-0.14	-0.03	2.26e-04	-8.36e-06	6.59e-06
97	35	0.08	0.19	-0.05	-2.70e-04	2.83e-05	5.09e-05
97	36	9.90e-03	-0.15	-0.03	2.41e-04	9.23e-06	-2.80e-05
97	37	0.02	0.20	-0.05	-2.90e-04	1.35e-05	9.46e-05
97	38	-0.06	-0.13	-0.03	2.21e-04	-5.52e-06	1.57e-05
97	39	0.03	0.18	-0.04	-2.57e-04	1.44e-05	3.31e-05
97	40	0.09	-0.13	-0.03	2.18e-04	2.88e-05	8.01e-06
97	41	-0.06	0.19	-0.04	-2.67e-04	-6.01e-06	5.86e-05
97	42	-1.80e-03	-0.13	-0.03	2.08e-04	8.33e-06	3.35e-05
97	43	0.02	0.18	-0.04	-2.52e-04	1.16e-05	2.40e-05
97	44	0.08	-0.14	-0.03	2.23e-04	2.59e-05	-1.13e-06
97	45	-0.05	0.19	-0.05	-2.72e-04	-3.17e-06	6.77e-05
97	46	9.64e-03	-0.12	-0.03	2.03e-04	1.12e-05	4.26e-05
97	47	-0.18	0.06	-0.04	-6.42e-05	-3.20e-05	1.27e-04
97	48	0.21	2.98e-04	-0.04	1.52e-05	5.48e-05	-6.08e-05
97	49	0.02	-0.23	-0.03	3.70e-04	1.41e-05	5.60e-06
97	50	3.10e-03	0.29	-0.05	-4.19e-04	8.64e-06	6.10e-05
98	1	0.01	0.03	-0.02	-1.77e-04	-5.88e-05	2.61e-05
98	2	0.01	0.03	-0.02	-1.79e-04	-5.88e-05	2.59e-05
98	3	0.02	0.04	-0.03	-2.06e-04	-5.39e-05	2.26e-05
98	4	0.02	0.04	-0.03	-2.08e-04	-5.39e-05	2.24e-05
98	5	9.64e-03	0.02	-0.02	-1.33e-04	-4.25e-05	1.97e-05
98	6	9.78e-03	0.02	-0.02	-1.35e-04	-4.26e-05	1.96e-05
98	7	0.01	0.03	-0.02	-1.62e-04	-3.76e-05	1.62e-05
98	8	0.01	0.03	-0.02	-1.64e-04	-3.77e-05	1.61e-05
98	9	0.01	0.03	-0.02	-1.81e-04	-5.89e-05	2.58e-05
98	10	0.02	0.04	-0.02	-1.97e-04	-5.53e-05	2.36e-05
98	11	0.02	0.04	-0.02	-2.02e-04	-5.55e-05	2.33e-05
98	12	9.91e-03	0.02	-0.02	-1.37e-04	-4.27e-05	1.94e-05
98	13	0.01	0.03	-0.02	-1.53e-04	-3.91e-05	1.73e-05
98	14	0.01	0.03	-0.02	-1.58e-04	-3.93e-05	1.70e-05
98	15	0.18	0.06	-0.01	-1.97e-04	1.43e-04	5.19e-05
98	16	0.20	-0.05	-0.02	-1.12e-04	1.10e-04	6.64e-05
98	17	-0.17	0.10	-0.02	-1.77e-04	-1.91e-04	-2.97e-05
98	18	-0.16	-7.56e-03	-0.02	-9.22e-05	-2.25e-04	-1.52e-05
98	19	0.18	0.05	-0.01	-1.88e-04	1.36e-04	4.95e-05
98	20	0.19	-0.04	-0.02	-1.21e-04	1.17e-04	6.88e-05
98	21	-0.17	0.09	-0.02	-1.68e-04	-1.98e-04	-3.21e-05
98	22	-0.16	4.62e-03	-0.02	-1.01e-04	-2.17e-04	-1.28e-05
98	23	0.21	0.02	-0.02	-1.54e-04	1.54e-04	-6.07e-05
98	24	0.22	-0.09	-0.03	-6.94e-05	1.21e-04	-4.62e-05
98	25	-0.20	0.14	-0.01	-2.20e-04	-2.02e-04	8.29e-05
98	26	-0.19	0.03	-0.02	-1.35e-04	-2.35e-04	9.73e-05
98	27	0.21	8.84e-03	-0.02	-1.46e-04	1.47e-04	-6.31e-05
98	28	0.22	-0.08	-0.02	-7.82e-05	1.28e-04	-4.38e-05
98	29	-0.20	0.13	-0.01	-2.11e-04	-2.09e-04	8.05e-05
98	30	-0.19	0.04	-0.02	-1.43e-04	-2.28e-04	9.98e-05
98	31	0.04	0.20	-5.24e-03	-2.89e-04	6.51e-05	6.47e-06
98	32	0.09	-0.16	-0.03	-5.74e-06	-4.58e-05	5.47e-05
98	33	-0.07	0.22	-5.78e-03	-2.83e-04	-3.53e-05	-1.80e-05
98	34	-0.02	-0.15	-0.03	0.0	-1.46e-04	3.02e-05
98	35	0.05	0.19	-6.48e-03	-2.76e-04	6.83e-05	-2.73e-05
98	36	0.10	-0.18	-0.03	6.99e-06	-4.26e-05	2.09e-05
98	37	-0.08	0.23	-4.54e-03	-2.96e-04	-3.86e-05	1.58e-05
98	38	-0.02	-0.14	-0.03	-1.26e-05	-1.49e-04	6.40e-05
98	39	0.04	0.16	-8.03e-03	-2.60e-04	4.10e-05	-1.56e-06
98	40	0.09	-0.12	-0.03	-3.50e-05	-2.18e-05	6.27e-05
98	41	-0.06	0.18	-8.57e-03	-2.54e-04	-5.94e-05	-2.60e-05
98	42	-0.02	-0.11	-0.03	-2.92e-05	-1.22e-04	3.82e-05
98	43	0.05	0.15	-9.27e-03	-2.47e-04	4.42e-05	-3.53e-05
98	44	0.10	-0.14	-0.03	-2.23e-05	-1.85e-05	2.90e-05
98	45	-0.07	0.19	-7.33e-03	-2.67e-04	-6.26e-05	7.74e-06
98	46	-0.03	-0.10	-0.03	-4.19e-05	-1.25e-04	7.20e-05
98	47	-0.29	0.09	-0.01	-1.77e-04	-3.10e-04	9.28e-05
98	48	0.31	-0.04	-0.02	-1.12e-04	2.29e-04	-5.61e-05
98	49	0.02	-0.24	-0.04	5.84e-05	-1.03e-04	4.03e-05
98	50	2.52e-03	0.29	-2.23e-04	-3.47e-04	2.20e-05	-3.57e-06
99	1	0.01	9.72e-03	-7.91e-03	-5.04e-05	1.14e-04	3.67e-05
99	2	0.01	9.74e-03	-7.91e-03	-5.08e-05	1.14e-04	3.69e-05
99	3	0.02	0.01	-0.01	-5.63e-05	1.70e-04	4.75e-05
99	4	0.02	0.01	-0.01	-5.67e-05	1.70e-04	4.77e-05
99	5	7.45e-03	7.10e-03	-5.62e-03	-3.72e-05	7.93e-05	2.67e-05
99	6	7.48e-03	7.11e-03	-5.61e-03	-3.76e-05	7.95e-05	2.68e-05
99	7	0.01	9.49e-03	-8.35e-03	-4.31e-05	1.36e-04	3.75e-05

99	8	0.01	9.50e-03	-8.34e-03	-4.35e-05	1.36e-04	3.76e-05
99	9	0.01	9.75e-03	-7.90e-03	-5.12e-05	1.14e-04	3.70e-05
99	10	0.01	0.01	-9.83e-03	-5.46e-05	1.53e-04	4.43e-05
99	11	0.01	0.01	-9.82e-03	-5.53e-05	1.53e-04	4.46e-05
99	12	7.52e-03	7.12e-03	-5.61e-03	-3.80e-05	7.97e-05	2.70e-05
99	13	0.01	8.77e-03	-7.53e-03	-4.14e-05	1.19e-04	3.42e-05
99	14	0.01	8.80e-03	-7.52e-03	-4.21e-05	1.19e-04	3.46e-05
99	15	0.12	0.05	-0.02	-1.52e-04	6.22e-04	8.44e-05
99	16	0.13	9.77e-05	-0.02	-1.04e-05	5.83e-04	1.03e-04
99	17	-0.11	0.02	5.75e-03	-6.88e-05	-3.79e-04	-4.06e-05
99	18	-0.11	-0.03	2.85e-03	7.33e-05	-4.18e-04	-2.24e-05
99	19	0.12	0.05	-0.02	-1.77e-04	6.24e-04	8.42e-05
99	20	0.13	-8.41e-03	-0.02	1.46e-05	5.81e-04	1.03e-04
99	21	-0.12	0.02	6.72e-03	-9.38e-05	-3.78e-04	-4.08e-05
99	22	-0.10	-0.04	1.88e-03	9.83e-05	-4.20e-04	-2.22e-05
99	23	0.13	0.07	-0.02	-2.17e-04	6.33e-04	-7.12e-05
99	24	0.14	0.02	-0.02	-7.46e-05	5.94e-04	-5.30e-05
99	25	-0.12	-4.54e-03	5.13e-03	-4.55e-06	-3.90e-04	1.15e-04
99	26	-0.11	-0.05	2.23e-03	1.38e-04	-4.29e-04	1.33e-04
99	27	0.13	0.08	-0.01	-2.42e-04	6.35e-04	-7.14e-05
99	28	0.14	0.01	-0.02	-4.97e-05	5.92e-04	-5.28e-05
99	29	-0.12	3.97e-03	6.10e-03	-2.95e-05	-3.88e-04	1.15e-04
99	30	-0.11	-0.06	1.26e-03	1.63e-04	-4.31e-04	1.33e-04
99	31	0.03	0.09	-5.17e-03	-2.89e-04	3.17e-04	1.95e-05
99	32	0.06	-0.06	-0.01	1.85e-04	1.87e-04	7.99e-05
99	33	-0.04	0.08	1.43e-03	-2.64e-04	1.64e-05	-1.80e-05
99	34	-0.01	-0.07	-8.24e-03	2.10e-04	-1.13e-04	4.24e-05
99	35	0.03	0.10	-4.99e-03	-3.08e-04	3.20e-04	-2.71e-05
99	36	0.06	-0.06	-0.01	1.65e-04	1.90e-04	3.33e-05
99	37	-0.04	0.07	1.24e-03	-2.45e-04	1.31e-05	2.87e-05
99	38	-0.01	-0.08	-8.43e-03	2.29e-04	-1.16e-04	8.91e-05
99	39	0.03	0.12	-1.94e-03	-3.72e-04	3.23e-04	1.86e-05
99	40	0.06	-0.09	-0.02	2.68e-04	1.81e-04	8.08e-05
99	41	-0.05	0.11	4.66e-03	-3.47e-04	2.24e-05	-1.89e-05
99	42	-7.10e-03	-0.10	-0.01	2.93e-04	-1.19e-04	4.33e-05
99	43	0.03	0.12	-1.76e-03	-3.91e-04	3.26e-04	-2.80e-05
99	44	0.07	-0.09	-0.02	2.49e-04	1.84e-04	3.41e-05
99	45	-0.05	0.10	4.47e-03	-3.28e-04	1.91e-05	2.78e-05
99	46	-7.92e-03	-0.11	-0.01	3.12e-04	-1.22e-04	9.00e-05
99	47	-0.17	-0.03	8.76e-03	8.31e-05	-6.52e-04	1.22e-04
99	48	0.19	0.05	-0.02	-1.62e-04	8.56e-04	-6.03e-05
99	49	0.02	-0.13	-0.02	3.97e-04	6.49e-05	5.93e-05
99	50	-1.30e-03	0.15	3.16e-03	-4.76e-04	1.39e-04	2.70e-06
100	1	5.98e-03	0.01	-0.01	-4.65e-05	7.35e-05	2.59e-05
100	2	6.03e-03	0.01	-0.01	-4.69e-05	7.38e-05	2.61e-05
100	3	0.01	0.01	-0.02	-5.13e-05	1.20e-04	3.37e-05
100	4	0.01	0.01	-0.02	-5.16e-05	1.21e-04	3.39e-05
100	5	4.46e-03	8.00e-03	-9.87e-03	-3.44e-05	5.16e-05	1.90e-05
100	6	4.51e-03	8.05e-03	-9.87e-03	-3.48e-05	5.19e-05	1.92e-05
100	7	9.70e-03	0.01	-0.01	-3.92e-05	9.86e-05	2.68e-05
100	8	9.75e-03	0.01	-0.01	-3.95e-05	9.89e-05	2.70e-05
100	9	6.08e-03	0.01	-0.01	-4.72e-05	7.40e-05	2.63e-05
100	10	9.65e-03	0.01	-0.02	-4.98e-05	1.06e-04	3.13e-05
100	11	9.75e-03	0.01	-0.02	-5.05e-05	1.07e-04	3.17e-05
100	12	4.56e-03	8.10e-03	-9.88e-03	-3.51e-05	5.22e-05	1.94e-05
100	13	8.13e-03	9.52e-03	-0.01	-3.78e-05	8.45e-05	2.45e-05
100	14	8.22e-03	9.62e-03	-0.01	-3.85e-05	8.50e-05	2.49e-05
100	15	0.17	0.04	-0.02	-1.30e-04	7.14e-04	2.39e-04
100	16	0.14	-4.47e-03	-0.03	4.84e-06	6.23e-04	1.48e-04
100	17	-0.13	0.02	3.18e-03	-7.75e-05	-4.83e-04	-1.03e-04
100	18	-0.16	-0.02	1.99e-03	5.77e-05	-5.73e-04	-1.95e-04
100	19	0.17	0.05	-0.02	-1.53e-04	6.97e-04	2.42e-04
100	20	0.15	-0.01	-0.03	2.74e-05	6.40e-04	1.44e-04
100	21	-0.13	0.03	3.49e-03	-1.00e-04	-5.00e-04	-9.99e-05
100	22	-0.15	-0.03	1.68e-03	8.03e-05	-5.56e-04	-1.98e-04
100	23	0.17	0.05	-0.02	-1.56e-04	6.93e-04	2.35e-04
100	24	0.14	4.05e-03	-0.02	-2.05e-05	6.02e-04	1.43e-04
100	25	-0.13	0.01	2.44e-03	-5.21e-05	-4.61e-04	-9.88e-05
100	26	-0.15	-0.03	1.26e-03	8.31e-05	-5.52e-04	-1.90e-04
100	27	0.16	0.06	-0.02	-1.78e-04	6.76e-04	2.38e-04
100	28	0.14	-3.39e-03	-0.02	2.04e-06	6.19e-04	1.40e-04
100	29	-0.13	0.02	2.76e-03	-7.47e-05	-4.79e-04	-9.55e-05
100	30	-0.15	-0.04	9.52e-04	1.06e-04	-5.35e-04	-1.94e-04
100	31	0.10	0.08	-0.01	-2.70e-04	4.01e-04	2.26e-04
100	32	7.80e-03	-0.06	-0.02	1.81e-04	9.87e-05	-7.91e-05
100	33	5.31e-03	0.08	-4.90e-03	-2.54e-04	4.22e-05	1.23e-04
100	34	-0.08	-0.07	-8.84e-03	1.97e-04	-2.60e-04	-1.82e-04

100	35	0.09	0.09	-0.01	-2.77e-04	3.95e-04	2.25e-04
100	36	6.83e-03	-0.06	-0.02	1.73e-04	9.23e-05	-8.04e-05
100	37	6.28e-03	0.08	-5.12e-03	-2.46e-04	4.85e-05	1.25e-04
100	38	-0.08	-0.07	-9.06e-03	2.05e-04	-2.54e-04	-1.80e-04
100	39	0.08	0.11	-0.01	-3.45e-04	3.44e-04	2.37e-04
100	40	0.02	-0.09	-0.02	2.56e-04	1.56e-04	-9.02e-05
100	41	-7.66e-03	0.10	-3.87e-03	-3.29e-04	-1.47e-05	1.35e-04
100	42	-0.07	-0.09	-9.88e-03	2.72e-04	-2.03e-04	-1.93e-04
100	43	0.08	0.11	-0.01	-3.52e-04	3.38e-04	2.36e-04
100	44	0.02	-0.08	-0.02	2.49e-04	1.49e-04	-9.15e-05
100	45	-6.69e-03	0.10	-4.09e-03	-3.21e-04	-8.37e-06	1.36e-04
100	46	-0.07	-0.09	-0.01	2.80e-04	-1.97e-04	-1.92e-04
100	47	-0.21	-0.01	9.16e-03	2.39e-05	-8.30e-04	-1.72e-04
100	48	0.23	0.03	-0.03	-9.65e-05	9.71e-04	2.17e-04
100	49	-0.05	-0.13	-0.01	3.79e-04	-9.47e-05	-2.28e-04
100	50	0.06	0.14	-8.84e-03	-4.52e-04	2.36e-04	2.72e-04
101	1	8.63e-03	0.01	-0.01	-5.07e-05	7.42e-05	2.35e-05
101	2	8.70e-03	0.01	-0.01	-5.11e-05	7.46e-05	2.37e-05
101	3	0.01	0.01	-0.02	-5.69e-05	1.16e-04	3.00e-05
101	4	0.01	0.01	-0.02	-5.73e-05	1.16e-04	3.02e-05
101	5	6.44e-03	8.68e-03	-9.55e-03	-3.74e-05	5.27e-05	1.73e-05
101	6	6.51e-03	8.73e-03	-9.55e-03	-3.77e-05	5.30e-05	1.75e-05
101	7	0.01	0.01	-0.01	-4.35e-05	9.44e-05	2.38e-05
101	8	0.01	0.01	-0.01	-4.39e-05	9.47e-05	2.40e-05
101	9	8.77e-03	0.01	-0.01	-5.15e-05	7.49e-05	2.39e-05
101	10	0.01	0.01	-0.01	-5.51e-05	1.03e-04	2.80e-05
101	11	0.01	0.01	-0.01	-5.58e-05	1.04e-04	2.84e-05
101	12	6.58e-03	8.78e-03	-9.56e-03	-3.81e-05	5.33e-05	1.77e-05
101	13	0.01	0.01	-0.01	-4.17e-05	8.19e-05	2.19e-05
101	14	0.01	0.01	-0.01	-4.24e-05	8.26e-05	2.23e-05
101	15	0.17	0.03	-0.02	-1.06e-04	7.05e-04	2.41e-04
101	16	0.14	-0.03	-0.03	7.60e-05	6.03e-04	1.19e-04
101	17	-0.12	0.05	4.18e-03	-1.56e-04	-4.64e-04	-7.95e-05
101	18	-0.15	-0.01	2.92e-03	2.59e-05	-5.67e-04	-2.01e-04
101	19	0.16	0.03	-0.02	-8.71e-05	6.78e-04	2.22e-04
101	20	0.15	-0.02	-0.03	5.75e-05	6.31e-04	1.39e-04
101	21	-0.13	0.04	4.35e-03	-1.37e-04	-4.92e-04	-9.89e-05
101	22	-0.14	-6.54e-03	2.76e-03	7.50e-06	-5.39e-04	-1.82e-04
101	23	0.16	0.02	-0.02	-7.16e-05	6.57e-04	-5.99e-05
101	24	0.13	-0.04	-0.02	1.10e-04	5.55e-04	-1.82e-04
101	25	-0.11	0.06	3.28e-03	-1.90e-04	-4.16e-04	2.21e-04
101	26	-0.14	-2.17e-03	2.02e-03	-8.03e-06	-5.19e-04	9.98e-05
101	27	0.15	0.02	-0.02	-5.32e-05	6.30e-04	-7.93e-05
101	28	0.13	-0.03	-0.02	9.15e-05	5.83e-04	-1.62e-04
101	29	-0.12	0.05	3.45e-03	-1.71e-04	-4.44e-04	2.02e-04
101	30	-0.13	4.24e-03	1.86e-03	-2.64e-05	-4.91e-04	1.19e-04
101	31	0.10	0.11	-0.01	-3.35e-04	4.15e-04	2.71e-04
101	32	1.64e-03	-0.09	-0.02	2.70e-04	7.42e-05	-1.35e-04
101	33	0.02	0.11	-4.15e-03	-3.50e-04	6.45e-05	1.75e-04
101	34	-0.08	-0.09	-8.35e-03	2.55e-04	-2.77e-04	-2.31e-04
101	35	0.10	0.10	-0.01	-3.25e-04	4.01e-04	1.81e-04
101	36	-2.11e-03	-0.10	-0.02	2.80e-04	5.98e-05	-2.25e-04
101	37	0.02	0.12	-4.42e-03	-3.60e-04	7.89e-05	2.65e-04
101	38	-0.08	-0.09	-8.62e-03	2.45e-04	-2.62e-04	-1.41e-04
101	39	0.08	0.09	-0.01	-2.73e-04	3.23e-04	2.06e-04
101	40	0.03	-0.07	-0.02	2.09e-04	1.66e-04	-7.01e-05
101	41	-0.01	0.09	-3.59e-03	-2.88e-04	-2.77e-05	1.10e-04
101	42	-0.06	-0.07	-8.92e-03	1.94e-04	-1.84e-04	-1.66e-04
101	43	0.07	0.08	-0.01	-2.63e-04	3.09e-04	1.16e-04
101	44	0.02	-0.08	-0.02	2.19e-04	1.52e-04	-1.60e-04
101	45	-7.30e-03	0.09	-3.86e-03	-2.99e-04	-1.33e-05	2.00e-04
101	46	-0.05	-0.06	-9.19e-03	1.84e-04	-1.70e-04	-7.60e-05
101	47	-0.20	0.03	0.01	-1.05e-04	-7.84e-04	-1.41e-04
101	48	0.21	-0.01	-0.03	2.59e-05	9.23e-04	1.80e-04
101	49	-0.04	-0.13	-0.01	3.95e-04	-9.49e-05	-2.47e-04
101	50	0.06	0.15	-8.16e-03	-4.74e-04	2.34e-04	2.86e-04
102	1	6.27e-03	0.01	-9.42e-03	-5.53e-05	-2.76e-05	-2.02e-05
102	2	6.33e-03	0.01	-9.40e-03	-5.58e-05	-2.74e-05	-2.01e-05
102	3	5.23e-03	0.02	-0.01	-6.15e-05	-6.06e-05	-3.33e-05
102	4	5.28e-03	0.02	-0.01	-6.20e-05	-6.03e-05	-3.32e-05
102	5	4.79e-03	8.75e-03	-6.76e-03	-4.08e-05	-1.65e-05	-1.38e-05
102	6	4.84e-03	8.79e-03	-6.75e-03	-4.12e-05	-1.62e-05	-1.37e-05
102	7	3.74e-03	0.01	-9.40e-03	-4.70e-05	-4.94e-05	-2.69e-05
102	8	3.80e-03	0.01	-9.38e-03	-4.74e-05	-4.92e-05	-2.68e-05
102	9	6.38e-03	0.01	-9.38e-03	-5.62e-05	-2.71e-05	-2.00e-05
102	10	5.54e-03	0.01	-0.01	-5.97e-05	-5.07e-05	-2.94e-05
102	11	5.65e-03	0.01	-0.01	-6.06e-05	-5.01e-05	-2.91e-05

102	12	4.90e-03	8.82e-03	-6.73e-03	-4.17e-05	-1.59e-05	-1.36e-05
102	13	4.06e-03	0.01	-8.61e-03	-4.51e-05	-3.96e-05	-2.30e-05
102	14	4.16e-03	0.01	-8.58e-03	-4.60e-05	-3.90e-05	-2.27e-05
102	15	0.12	0.03	4.72e-03	-9.93e-05	4.34e-04	7.33e-05
102	16	0.13	-0.04	7.13e-04	7.47e-05	4.73e-04	9.06e-05
102	17	-0.12	0.06	-0.02	-1.61e-04	-5.33e-04	-1.29e-04
102	18	-0.11	-6.22e-03	-0.02	1.28e-05	-4.94e-04	-1.11e-04
102	19	0.12	0.02	3.93e-03	-8.00e-05	4.74e-04	8.95e-05
102	20	0.13	-0.03	1.50e-03	5.55e-05	4.34e-04	7.44e-05
102	21	-0.12	0.05	-0.02	-1.42e-04	-4.93e-04	-1.12e-04
102	22	-0.11	1.27e-03	-0.02	-6.43e-06	-5.33e-04	-1.28e-04
102	23	0.12	3.55e-03	4.15e-03	-3.72e-05	4.44e-04	-1.47e-04
102	24	0.13	-0.06	1.47e-04	1.37e-04	4.84e-04	-1.29e-04
102	25	-0.12	0.08	-0.02	-2.23e-04	-5.43e-04	9.13e-05
102	26	-0.11	0.02	-0.02	-4.92e-05	-5.04e-04	1.09e-04
102	27	0.12	-3.94e-03	3.36e-03	-1.80e-05	4.84e-04	-1.31e-04
102	28	0.13	-0.05	9.37e-04	1.18e-04	4.44e-04	-1.46e-04
102	29	-0.12	0.07	-0.02	-2.04e-04	-5.04e-04	1.08e-04
102	30	-0.11	0.02	-0.02	-6.85e-05	-5.43e-04	9.25e-05
102	31	0.03	0.11	2.02e-03	-3.24e-04	5.03e-05	-1.76e-05
102	32	0.05	-0.10	-0.01	2.56e-04	1.80e-04	4.01e-05
102	33	-0.05	0.12	-4.30e-03	-3.43e-04	-2.40e-04	-7.82e-05
102	34	-0.02	-0.09	-0.02	2.38e-04	-1.10e-04	-2.04e-05
102	35	0.03	0.11	1.85e-03	-3.05e-04	5.33e-05	-8.37e-05
102	36	0.06	-0.11	-0.01	2.75e-04	1.84e-04	-2.59e-05
102	37	-0.05	0.13	-4.13e-03	-3.61e-04	-2.43e-04	-1.22e-05
102	38	-0.02	-0.09	-0.02	2.19e-04	-1.13e-04	4.56e-05
102	39	0.02	0.09	-6.17e-04	-2.60e-04	1.81e-04	3.64e-05
102	40	0.06	-0.08	-8.70e-03	1.92e-04	4.95e-05	-1.39e-05
102	41	-0.05	0.10	-6.94e-03	-2.78e-04	-1.09e-04	-2.42e-05
102	42	-0.01	-0.07	-0.02	1.73e-04	-2.41e-04	-7.45e-05
102	43	0.02	0.08	-7.87e-04	-2.41e-04	1.84e-04	-2.96e-05
102	44	0.06	-0.09	-8.87e-03	2.11e-04	5.25e-05	-7.99e-05
102	45	-0.05	0.11	-6.77e-03	-2.97e-04	-1.12e-04	4.18e-05
102	46	-0.01	-0.06	-0.01	1.55e-04	-2.44e-04	-8.49e-06
102	47	-0.17	0.06	-0.02	-1.46e-04	-7.58e-04	-1.36e-04
102	48	0.18	-0.04	7.06e-03	5.97e-05	6.98e-04	9.82e-05
102	49	0.01	-0.15	-0.02	3.68e-04	-6.35e-05	-3.85e-05
102	50	-5.84e-03	0.17	5.59e-04	-4.55e-04	4.18e-06	0.0
103	1	0.02	0.03	-0.03	7.45e-05	-5.66e-05	-8.95e-05
103	2	0.02	0.03	-0.03	7.40e-05	-5.52e-05	-8.75e-05
103	3	0.02	0.04	-0.04	7.64e-05	-5.63e-05	-1.03e-04
103	4	0.02	0.04	-0.04	7.59e-05	-5.49e-05	-1.01e-04
103	5	0.01	0.02	-0.02	5.42e-05	-4.19e-05	-6.50e-05
103	6	0.01	0.02	-0.02	5.37e-05	-4.05e-05	-6.30e-05
103	7	0.02	0.03	-0.03	5.60e-05	-4.15e-05	-7.89e-05
103	8	0.02	0.03	-0.03	5.56e-05	-4.01e-05	-7.69e-05
103	9	0.02	0.03	-0.03	7.35e-05	-5.38e-05	-8.55e-05
103	10	0.02	0.04	-0.03	7.58e-05	-5.64e-05	-9.92e-05
103	11	0.02	0.04	-0.03	7.48e-05	-5.36e-05	-9.52e-05
103	12	0.01	0.02	-0.02	5.32e-05	-3.91e-05	-6.10e-05
103	13	0.01	0.03	-0.03	5.55e-05	-4.16e-05	-7.47e-05
103	14	0.02	0.03	-0.03	5.45e-05	-3.89e-05	-7.08e-05
103	15	0.17	0.06	-0.03	0.0	2.38e-05	-9.57e-05
103	16	0.15	-0.05	-0.03	7.62e-05	3.21e-05	-8.04e-05
103	17	-0.12	0.11	-0.02	3.36e-05	-1.16e-04	-6.08e-05
103	18	-0.15	-4.43e-03	-0.02	1.10e-04	-1.07e-04	-4.54e-05
103	19	0.15	0.05	-0.03	1.04e-05	2.20e-05	-1.04e-04
103	20	0.17	-0.04	-0.03	6.61e-05	3.39e-05	-7.17e-05
103	21	-0.14	0.09	-0.02	4.38e-05	-1.17e-04	-6.94e-05
103	22	-0.13	7.43e-03	-0.02	9.94e-05	-1.05e-04	-3.67e-05
103	23	0.14	0.02	-0.03	5.72e-05	7.31e-06	-1.19e-04
103	24	0.11	-0.09	-0.03	1.33e-04	1.57e-05	-1.04e-04
103	25	-0.09	0.14	-0.02	-2.32e-05	-9.92e-05	-3.72e-05
103	26	-0.11	0.03	-0.02	5.26e-05	-9.08e-05	-2.18e-05
103	27	0.12	6.87e-03	-0.03	6.73e-05	5.53e-06	-1.28e-04
103	28	0.13	-0.08	-0.03	1.23e-04	1.75e-05	-9.53e-05
103	29	-0.11	0.13	-0.02	-1.31e-05	-1.01e-04	-4.59e-05
103	30	-0.09	0.05	-0.02	4.25e-05	-8.90e-05	-1.31e-05
103	31	0.10	0.20	-0.03	-7.66e-05	-3.48e-05	-1.01e-04
103	32	0.02	-0.16	-0.02	1.76e-04	-6.88e-06	-5.02e-05
103	33	5.94e-03	0.22	-0.03	-6.66e-05	-7.66e-05	-9.09e-05
103	34	-0.07	-0.15	-0.02	1.86e-04	-4.87e-05	-3.97e-05
103	35	0.08	0.19	-0.03	-5.95e-05	-3.97e-05	-1.08e-04
103	36	9.64e-03	-0.18	-0.02	1.93e-04	-1.18e-05	-5.73e-05
103	37	0.02	0.23	-0.03	-8.36e-05	-7.17e-05	-8.38e-05
103	38	-0.06	-0.14	-0.02	1.69e-04	-4.38e-05	-3.26e-05

103	39	0.03	0.16	-0.03	-4.29e-05	-4.07e-05	-1.30e-04
103	40	0.09	-0.12	-0.02	1.43e-04	0.0	-2.12e-05
103	41	-0.06	0.18	-0.03	-3.29e-05	-8.25e-05	-1.20e-04
103	42	-2.17e-03	-0.11	-0.02	1.53e-04	-4.28e-05	-1.08e-05
103	43	0.02	0.15	-0.03	-2.58e-05	-4.57e-05	-1.37e-04
103	44	0.08	-0.14	-0.02	1.60e-04	-5.89e-06	-2.83e-05
103	45	-0.05	0.19	-0.03	-5.00e-05	-7.76e-05	-1.13e-04
103	46	9.27e-03	-0.10	-0.02	1.36e-04	-3.78e-05	-3.68e-06
103	47	-0.18	0.10	-0.02	1.00e-05	-1.34e-04	-2.29e-05
103	48	0.21	-0.05	-0.03	9.98e-05	5.01e-05	-1.18e-04
103	49	0.02	-0.23	-0.02	2.29e-04	-2.83e-05	-1.26e-05
103	50	2.81e-03	0.29	-0.03	-1.20e-04	-5.52e-05	-1.29e-04
104	1	0.03	0.02	-0.04	4.77e-05	1.47e-04	6.71e-05
104	2	0.03	0.02	-0.04	4.48e-05	1.72e-04	6.76e-05
104	3	0.04	0.02	-0.04	4.86e-05	1.47e-04	7.50e-05
104	4	0.04	0.02	-0.04	4.57e-05	1.73e-04	7.56e-05
104	5	0.02	0.01	-0.03	3.42e-05	1.05e-04	5.04e-05
104	6	0.03	0.01	-0.03	3.13e-05	1.31e-04	5.09e-05
104	7	0.03	0.02	-0.03	3.51e-05	1.06e-04	5.83e-05
104	8	0.03	0.02	-0.03	3.22e-05	1.32e-04	5.89e-05
104	9	0.04	0.02	-0.04	4.19e-05	1.98e-04	6.82e-05
104	10	0.04	0.02	-0.04	4.84e-05	1.47e-04	7.27e-05
104	11	0.04	0.02	-0.04	4.26e-05	1.98e-04	7.37e-05
104	12	0.03	0.01	-0.03	2.84e-05	1.57e-04	5.15e-05
104	13	0.03	0.02	-0.03	3.48e-05	1.06e-04	5.60e-05
104	14	0.03	0.02	-0.03	2.90e-05	1.57e-04	5.70e-05
104	15	0.18	0.10	-0.03	-5.56e-05	1.68e-04	5.51e-05
104	16	0.21	-5.99e-03	-0.03	5.46e-05	1.79e-04	6.49e-06
104	17	-0.16	0.03	-0.03	1.44e-05	3.27e-05	1.01e-04
104	18	-0.13	-0.07	-0.03	1.25e-04	4.29e-05	5.21e-05
104	19	0.18	0.12	-0.03	-8.88e-05	1.69e-04	4.68e-05
104	20	0.20	-0.03	-0.03	8.78e-05	1.78e-04	1.48e-05
104	21	-0.15	0.05	-0.03	-1.88e-05	3.28e-05	9.24e-05
104	22	-0.13	-0.09	-0.03	1.58e-04	4.28e-05	6.04e-05
104	23	0.14	0.14	-0.03	-9.30e-05	1.49e-04	2.87e-05
104	24	0.16	0.04	-0.03	1.73e-05	1.59e-04	-1.99e-05
104	25	-0.11	-8.55e-03	-0.03	5.18e-05	5.23e-05	1.27e-04
104	26	-0.09	-0.11	-0.03	1.62e-04	6.25e-05	7.84e-05
104	27	0.14	0.16	-0.03	-1.26e-04	1.49e-04	2.04e-05
104	28	0.16	0.02	-0.03	5.05e-05	1.59e-04	-1.16e-05
104	29	-0.11	0.01	-0.03	1.86e-05	5.24e-05	1.19e-04
104	30	-0.09	-0.13	-0.03	1.95e-04	6.24e-05	8.67e-05
104	31	0.03	0.19	-0.03	-1.60e-04	1.09e-04	1.28e-04
104	32	0.12	-0.15	-0.03	2.08e-04	1.43e-04	-3.43e-05
104	33	-0.07	0.17	-0.03	-1.39e-04	6.82e-05	1.41e-04
104	34	0.02	-0.17	-0.03	2.29e-04	1.02e-04	-2.06e-05
104	35	0.02	0.21	-0.03	-1.71e-04	1.03e-04	1.20e-04
104	36	0.10	-0.13	-0.02	1.97e-04	1.37e-04	-4.22e-05
104	37	-0.05	0.16	-0.03	-1.27e-04	7.41e-05	1.49e-04
104	38	0.03	-0.18	-0.03	2.40e-04	1.08e-04	-1.27e-05
104	39	0.04	0.26	-0.03	-2.70e-04	1.09e-04	1.00e-04
104	40	0.11	-0.21	-0.02	3.18e-04	1.43e-04	-6.62e-06
104	41	-0.06	0.24	-0.03	-2.49e-04	6.87e-05	1.14e-04
104	42	8.62e-03	-0.23	-0.02	3.39e-04	1.02e-04	7.05e-06
104	43	0.03	0.27	-0.03	-2.82e-04	1.04e-04	9.22e-05
104	44	0.10	-0.20	-0.02	3.07e-04	1.37e-04	-1.45e-05
104	45	-0.05	0.23	-0.03	-2.38e-04	7.46e-05	1.22e-04
104	46	0.02	-0.25	-0.02	3.51e-04	1.08e-04	1.50e-05
104	47	-0.19	-0.07	-0.03	1.18e-04	2.38e-05	1.13e-04
104	48	0.24	0.10	-0.03	-4.85e-05	1.87e-04	-5.43e-06
104	49	0.04	-0.30	-0.02	4.06e-04	1.14e-04	-5.33e-05
104	50	0.01	0.33	-0.03	-3.37e-04	9.73e-05	1.60e-04
105	1	4.37e-03	8.80e-03	-0.01	-1.73e-04	1.52e-04	-1.64e-05
105	2	4.37e-03	8.82e-03	-0.01	-1.74e-04	1.53e-04	-1.62e-05
105	3	6.67e-03	0.01	-0.02	-1.82e-04	1.93e-04	-3.15e-05
105	4	6.67e-03	0.01	-0.02	-1.84e-04	1.94e-04	-3.13e-05
105	5	3.14e-03	6.46e-03	-9.71e-03	-1.30e-04	1.12e-04	-1.14e-05
105	6	3.14e-03	6.47e-03	-9.74e-03	-1.31e-04	1.13e-04	-1.12e-05
105	7	5.44e-03	8.21e-03	-0.01	-1.40e-04	1.53e-04	-2.65e-05
105	8	5.44e-03	8.23e-03	-0.01	-1.41e-04	1.54e-04	-2.63e-05
105	9	4.36e-03	8.83e-03	-0.01	-1.75e-04	1.53e-04	-1.60e-05
105	10	5.98e-03	0.01	-0.01	-1.79e-04	1.81e-04	-2.70e-05
105	11	5.97e-03	0.01	-0.01	-1.82e-04	1.82e-04	-2.66e-05
105	12	3.13e-03	6.48e-03	-9.77e-03	-1.33e-04	1.13e-04	-1.10e-05
105	13	4.75e-03	7.69e-03	-0.01	-1.37e-04	1.41e-04	-2.20e-05
105	14	4.74e-03	7.71e-03	-0.01	-1.39e-04	1.42e-04	-2.16e-05
105	15	0.12	0.05	-0.01	-1.38e-04	4.21e-04	-4.31e-05

105	16	0.11	-7.51e-04	-0.02	-6.98e-05	4.54e-04	-5.54e-05
105	17	-0.10	0.02	-2.95e-03	-1.98e-04	-1.97e-04	2.06e-05
105	18	-0.11	-0.03	-7.29e-03	-1.29e-04	-1.64e-04	8.23e-06
105	19	0.12	0.05	-0.01	-1.51e-04	4.14e-04	-5.37e-05
105	20	0.11	-9.04e-03	-0.02	-5.71e-05	4.61e-04	-4.48e-05
105	21	-0.10	0.02	-2.06e-03	-2.10e-04	-2.04e-04	9.92e-06
105	22	-0.11	-0.04	-8.18e-03	-1.17e-04	-1.57e-04	1.89e-05
105	23	0.14	0.07	-0.01	-1.43e-04	4.63e-04	-6.91e-05
105	24	0.13	0.02	-0.02	-7.45e-05	4.96e-04	-8.15e-05
105	25	-0.12	-5.59e-03	-3.39e-03	-1.93e-04	-2.39e-04	4.66e-05
105	26	-0.13	-0.05	-7.73e-03	-1.25e-04	-2.06e-04	3.43e-05
105	27	0.14	0.07	-0.01	-1.56e-04	4.56e-04	-7.98e-05
105	28	0.13	0.01	-0.02	-6.18e-05	5.03e-04	-7.08e-05
105	29	-0.12	2.70e-03	-2.50e-03	-2.06e-04	-2.46e-04	3.60e-05
105	30	-0.13	-0.06	-8.62e-03	-1.12e-04	-1.99e-04	4.49e-05
105	31	0.05	0.09	-5.17e-03	-2.39e-04	1.66e-04	-6.42e-06
105	32	0.02	-0.06	-0.02	-1.09e-05	2.77e-04	-4.75e-05
105	33	-0.01	0.08	-1.80e-03	-2.57e-04	-1.95e-05	1.27e-05
105	34	-0.05	-0.07	-0.02	-2.88e-05	9.15e-05	-2.84e-05
105	35	0.06	0.09	-5.04e-03	-2.40e-04	1.78e-04	-1.42e-05
105	36	0.03	-0.06	-0.02	-1.23e-05	2.89e-04	-5.53e-05
105	37	-0.02	0.07	-1.94e-03	-2.55e-04	-3.21e-05	2.05e-05
105	38	-0.05	-0.08	-0.02	-2.74e-05	7.89e-05	-2.06e-05
105	39	0.05	0.12	-2.21e-03	-2.81e-04	1.44e-04	-4.19e-05
105	40	0.02	-0.09	-0.02	3.15e-05	2.99e-04	-1.20e-05
105	41	-0.01	0.11	1.16e-03	-2.99e-04	-4.17e-05	-2.28e-05
105	42	-0.04	-0.10	-0.02	1.36e-05	1.14e-04	7.05e-06
105	43	0.06	0.12	-2.07e-03	-2.83e-04	1.56e-04	-4.97e-05
105	44	0.03	-0.09	-0.02	3.01e-05	3.12e-04	-1.99e-05
105	45	-0.02	0.10	1.03e-03	-2.98e-04	-5.43e-05	-1.50e-05
105	46	-0.05	-0.11	-0.02	1.50e-05	1.01e-04	1.49e-05
105	47	-0.18	-0.03	-2.60e-03	-1.69e-04	-3.88e-04	4.35e-05
105	48	0.19	0.05	-0.02	-9.89e-05	6.46e-04	-7.83e-05
105	49	-5.42e-04	-0.13	-0.02	7.88e-05	2.13e-04	-2.51e-05
105	50	8.66e-03	0.15	3.00e-03	-3.46e-04	4.47e-05	-9.74e-06
106	1	4.40e-03	9.79e-03	-0.02	-5.56e-05	5.87e-05	-9.16e-06
106	2	4.40e-03	9.83e-03	-0.02	-5.60e-05	5.89e-05	-9.17e-06
106	3	6.73e-03	0.01	-0.02	-6.50e-05	9.47e-05	-9.66e-06
106	4	6.73e-03	0.01	-0.02	-6.54e-05	9.49e-05	-9.67e-06
106	5	3.16e-03	7.19e-03	-0.01	-4.08e-05	4.17e-05	-6.70e-06
106	6	3.16e-03	7.22e-03	-0.01	-4.12e-05	4.19e-05	-6.70e-06
106	7	5.49e-03	9.16e-03	-0.01	-5.02e-05	7.77e-05	-7.20e-06
106	8	5.48e-03	9.19e-03	-0.01	-5.06e-05	7.79e-05	-7.20e-06
106	9	4.40e-03	9.86e-03	-0.02	-5.64e-05	5.91e-05	-9.17e-06
106	10	6.03e-03	0.01	-0.02	-6.21e-05	8.39e-05	-9.51e-06
106	11	6.02e-03	0.01	-0.02	-6.30e-05	8.43e-05	-9.52e-06
106	12	3.15e-03	7.26e-03	-0.01	-4.16e-05	4.21e-05	-6.71e-06
106	13	4.79e-03	8.57e-03	-0.01	-4.74e-05	6.69e-05	-7.05e-06
106	14	4.78e-03	8.64e-03	-0.01	-4.82e-05	6.73e-05	-7.06e-06
106	15	0.12	0.04	-0.02	-9.52e-05	3.56e-04	-3.21e-05
106	16	0.11	-6.78e-03	-0.01	5.36e-05	3.29e-04	-6.20e-05
106	17	-0.10	0.02	-0.01	-1.43e-04	-2.17e-04	4.82e-05
106	18	-0.11	-0.02	-6.87e-03	6.02e-06	-2.44e-04	1.83e-05
106	19	0.12	0.05	-0.02	-1.22e-04	3.54e-04	-3.80e-05
106	20	0.11	-0.01	-0.01	8.01e-05	3.32e-04	-5.61e-05
106	21	-0.10	0.03	-0.01	-1.69e-04	-2.19e-04	4.23e-05
106	22	-0.11	-0.03	-6.42e-03	3.24e-05	-2.41e-04	2.42e-05
106	23	0.14	0.05	-0.02	-7.55e-05	4.07e-04	-5.69e-05
106	24	0.13	4.57e-04	-0.02	7.34e-05	3.80e-04	-8.68e-05
106	25	-0.12	0.02	-9.35e-03	-1.63e-04	-2.67e-04	7.30e-05
106	26	-0.13	-0.03	-4.98e-03	-1.37e-05	-2.95e-04	4.31e-05
106	27	0.14	0.05	-0.02	-1.02e-04	4.04e-04	-6.28e-05
106	28	0.13	-7.19e-03	-0.01	9.98e-05	3.82e-04	-8.09e-05
106	29	-0.12	0.02	-9.80e-03	-1.89e-04	-2.70e-04	6.71e-05
106	30	-0.13	-0.04	-4.53e-03	1.27e-05	-2.92e-04	4.90e-05
106	31	0.05	0.08	-0.02	-2.85e-04	1.88e-04	3.08e-05
106	32	0.02	-0.06	-5.92e-03	2.11e-04	9.65e-05	-6.87e-05
106	33	-0.01	0.08	-0.02	-3.00e-04	1.58e-05	5.49e-05
106	34	-0.05	-0.07	-4.00e-03	1.96e-04	-7.55e-05	-4.46e-05
106	35	0.06	0.09	-0.02	-2.80e-04	2.03e-04	2.34e-05
106	36	0.03	-0.06	-6.48e-03	2.17e-04	1.12e-04	-7.62e-05
106	37	-0.02	0.08	-0.02	-3.06e-04	0.0	6.24e-05
106	38	-0.05	-0.07	-3.44e-03	1.90e-04	-9.07e-05	-3.72e-05
106	39	0.05	0.11	-0.02	-3.74e-04	1.79e-04	1.13e-05
106	40	0.02	-0.09	-4.42e-03	2.99e-04	1.05e-04	-4.91e-05
106	41	-0.01	0.11	-0.02	-3.88e-04	6.82e-06	3.53e-05
106	42	-0.04	-0.09	-2.51e-03	2.84e-04	-6.65e-05	-2.51e-05

106	43	0.06	0.11	-0.02	-3.68e-04	1.94e-04	3.82e-06
106	44	0.03	-0.09	-4.99e-03	3.05e-04	1.21e-04	-5.66e-05
106	45	-0.02	0.10	-0.02	-3.94e-04	-8.39e-06	4.28e-05
106	46	-0.05	-0.10	-1.94e-03	2.78e-04	-8.17e-05	-1.76e-05
106	47	-0.18	-8.48e-03	-6.10e-03	-9.03e-05	-4.33e-04	6.72e-05
106	48	0.19	0.02	-0.02	1.17e-06	5.45e-04	-8.10e-05
106	49	-5.81e-04	-0.13	3.22e-04	4.17e-04	4.52e-05	-6.74e-05
106	50	8.76e-03	0.15	-0.02	-5.06e-04	6.71e-05	5.36e-05
107	1	4.87e-03	6.47e-03	-0.02	-1.72e-04	2.81e-05	3.27e-05
107	2	4.88e-03	6.48e-03	-0.02	-1.74e-04	2.82e-05	3.25e-05
107	3	7.02e-03	8.01e-03	-0.02	-2.14e-04	5.18e-05	5.58e-05
107	4	7.02e-03	8.02e-03	-0.02	-2.16e-04	5.19e-05	5.55e-05
107	5	3.51e-03	4.75e-03	-0.02	-1.27e-04	1.98e-05	2.31e-05
107	6	3.51e-03	4.76e-03	-0.02	-1.29e-04	1.99e-05	2.29e-05
107	7	5.66e-03	6.29e-03	-0.02	-1.69e-04	4.35e-05	4.62e-05
107	8	5.66e-03	6.30e-03	-0.02	-1.71e-04	4.36e-05	4.59e-05
107	9	4.88e-03	6.49e-03	-0.02	-1.76e-04	2.83e-05	3.22e-05
107	10	6.37e-03	7.55e-03	-0.02	-2.01e-04	4.47e-05	4.89e-05
107	11	6.38e-03	7.57e-03	-0.02	-2.06e-04	4.49e-05	4.84e-05
107	12	3.52e-03	4.77e-03	-0.02	-1.31e-04	2.01e-05	2.26e-05
107	13	5.01e-03	5.83e-03	-0.02	-1.56e-04	3.64e-05	3.92e-05
107	14	5.02e-03	5.85e-03	-0.02	-1.60e-04	3.66e-05	3.87e-05
107	15	0.10	0.04	-0.02	-1.64e-04	2.69e-04	5.79e-05
107	16	0.11	-0.02	-0.02	-1.15e-04	2.92e-04	2.45e-05
107	17	-0.11	0.03	-0.01	-1.72e-04	-2.34e-04	4.02e-05
107	18	-0.10	-0.03	-0.01	-1.23e-04	-2.10e-04	6.72e-06
107	19	0.10	0.04	-0.02	-1.67e-04	2.69e-04	4.97e-05
107	20	0.11	-0.02	-0.02	-1.12e-04	2.93e-04	3.27e-05
107	21	-0.10	0.03	-0.01	-1.75e-04	-2.34e-04	3.20e-05
107	22	-0.10	-0.03	-0.01	-1.20e-04	-2.10e-04	1.49e-05
107	23	0.12	0.04	-0.02	-1.61e-04	3.17e-04	6.70e-05
107	24	0.13	-0.01	-0.02	-1.12e-04	3.40e-04	3.35e-05
107	25	-0.13	0.02	-9.27e-03	-1.75e-04	-2.82e-04	3.11e-05
107	26	-0.12	-0.03	-9.97e-03	-1.26e-04	-2.58e-04	-2.33e-06
107	27	0.13	0.05	-0.02	-1.64e-04	3.17e-04	5.88e-05
107	28	0.13	-0.01	-0.02	-1.09e-04	3.40e-04	4.17e-05
107	29	-0.13	0.03	-9.13e-03	-1.78e-04	-2.82e-04	2.29e-05
107	30	-0.12	-0.04	-0.01	-1.23e-04	-2.58e-04	5.88e-06
107	31	0.02	0.10	-0.02	-2.23e-04	6.57e-05	9.07e-05
107	32	0.05	-0.08	-0.02	-6.19e-05	1.44e-04	-2.08e-05
107	33	-0.04	0.09	-0.01	-2.25e-04	-8.52e-05	8.54e-05
107	34	-0.01	-0.09	-0.02	-6.44e-05	-7.07e-06	-2.61e-05
107	35	0.03	0.10	-0.02	-2.22e-04	8.00e-05	9.35e-05
107	36	0.06	-0.08	-0.02	-6.10e-05	1.58e-04	-1.80e-05
107	37	-0.05	0.09	-0.01	-2.26e-04	-9.95e-05	8.27e-05
107	38	-0.02	-0.09	-0.02	-6.52e-05	-2.14e-05	-2.88e-05
107	39	0.02	0.11	-0.02	-2.35e-04	6.50e-05	6.34e-05
107	40	0.05	-0.09	-0.02	-5.00e-05	1.44e-04	6.60e-06
107	41	-0.04	0.10	-0.01	-2.37e-04	-8.58e-05	5.81e-05
107	42	-0.01	-0.10	-0.02	-5.25e-05	-6.39e-06	1.27e-06
107	43	0.03	0.11	-0.02	-2.34e-04	7.93e-05	6.61e-05
107	44	0.06	-0.09	-0.02	-4.92e-05	1.59e-04	9.31e-06
107	45	-0.05	0.10	-0.01	-2.38e-04	-1.00e-04	5.54e-05
107	46	-0.02	-0.10	-0.02	-5.34e-05	-2.07e-05	-1.45e-06
107	47	-0.18	-6.65e-03	-6.80e-03	-1.51e-04	-4.02e-04	1.57e-05
107	48	0.19	0.02	-0.02	-1.36e-04	4.60e-04	4.89e-05
107	49	9.84e-03	-0.15	-0.02	-6.40e-06	5.31e-05	-3.48e-05
107	50	-1.11e-03	0.16	-0.01	-2.81e-04	5.55e-06	9.95e-05
108	1	7.38e-03	0.02	-0.02	-1.52e-04	5.15e-05	-2.08e-05
108	2	7.39e-03	0.02	-0.02	-1.52e-04	5.18e-05	-2.07e-05
108	3	0.01	0.02	-0.03	-1.90e-04	7.69e-05	-2.99e-05
108	4	0.01	0.02	-0.03	-1.90e-04	7.72e-05	-2.99e-05
108	5	5.31e-03	0.01	-0.02	-1.09e-04	3.70e-05	-1.49e-05
108	6	5.32e-03	0.01	-0.02	-1.09e-04	3.73e-05	-1.48e-05
108	7	8.41e-03	0.01	-0.02	-1.47e-04	6.24e-05	-2.40e-05
108	8	8.42e-03	0.01	-0.02	-1.47e-04	6.27e-05	-2.40e-05
108	9	7.40e-03	0.02	-0.02	-1.53e-04	5.21e-05	-2.07e-05
108	10	9.55e-03	0.02	-0.02	-1.79e-04	6.93e-05	-2.72e-05
108	11	9.57e-03	0.02	-0.02	-1.79e-04	6.99e-05	-2.71e-05
108	12	5.33e-03	0.01	-0.02	-1.10e-04	3.76e-05	-1.48e-05
108	13	7.48e-03	0.01	-0.02	-1.35e-04	5.48e-05	-2.13e-05
108	14	7.50e-03	0.01	-0.02	-1.36e-04	5.54e-05	-2.12e-05
108	15	0.11	0.04	-0.03	-2.53e-04	3.35e-04	-7.47e-05
108	16	0.12	-0.02	-0.03	-3.46e-05	3.64e-04	-8.81e-05
108	17	-0.11	0.05	-9.45e-03	-2.13e-04	-2.69e-04	5.11e-05
108	18	-0.10	-0.01	-4.28e-03	4.68e-06	-2.41e-04	3.77e-05
108	19	0.11	0.04	-0.03	-2.55e-04	3.36e-04	-8.63e-05

108	20	0.12	-0.02	-0.03	-3.24e-05	3.63e-04	-7.65e-05
108	21	-0.11	0.05	-9.26e-03	-2.16e-04	-2.69e-04	3.95e-05
108	22	-0.10	-0.01	-4.47e-03	6.97e-06	-2.41e-04	4.93e-05
108	23	0.13	0.04	-0.03	-2.53e-04	3.94e-04	-1.02e-04
108	24	0.14	-0.02	-0.03	-3.46e-05	4.23e-04	-1.16e-04
108	25	-0.13	0.05	-8.30e-03	-2.13e-04	-3.28e-04	7.88e-05
108	26	-0.12	-0.01	-3.13e-03	4.66e-06	-2.99e-04	6.55e-05
108	27	0.13	0.04	-0.03	-2.55e-04	3.95e-04	-1.14e-04
108	28	0.14	-0.02	-0.03	-3.23e-05	4.22e-04	-1.04e-04
108	29	-0.13	0.05	-8.11e-03	-2.16e-04	-3.27e-04	6.72e-05
108	30	-0.12	-0.01	-3.32e-03	6.94e-06	-3.00e-04	7.71e-05
108	31	0.02	0.11	-0.03	-4.93e-04	8.98e-05	-1.51e-05
108	32	0.06	-0.08	-0.01	2.34e-04	1.86e-04	-5.97e-05
108	33	-0.04	0.11	-0.02	-4.82e-04	-9.15e-05	2.27e-05
108	34	-8.49e-03	-0.08	-5.80e-03	2.45e-04	4.56e-06	-2.19e-05
108	35	0.03	0.11	-0.03	-4.93e-04	1.07e-04	-2.34e-05
108	36	0.06	-0.09	-0.01	2.34e-04	2.04e-04	-6.80e-05
108	37	-0.05	0.11	-0.02	-4.82e-04	-1.09e-04	3.10e-05
108	38	-0.02	-0.08	-5.45e-03	2.45e-04	-1.31e-05	-1.36e-05
108	39	0.02	0.11	-0.03	-5.01e-04	9.24e-05	-5.38e-05
108	40	0.05	-0.09	-0.01	2.41e-04	1.83e-04	-2.10e-05
108	41	-0.04	0.11	-0.02	-4.89e-04	-8.89e-05	-1.60e-05
108	42	-0.01	-0.08	-6.43e-03	2.53e-04	1.99e-06	1.67e-05
108	43	0.03	0.11	-0.03	-5.01e-04	1.10e-04	-6.21e-05
108	44	0.06	-0.09	-0.01	2.41e-04	2.01e-04	-2.93e-05
108	45	-0.05	0.11	-0.02	-4.89e-04	-1.07e-04	-7.69e-06
108	46	-0.02	-0.08	-6.08e-03	2.53e-04	-1.57e-05	2.51e-05
108	47	-0.18	0.02	2.18e-04	-9.47e-05	-4.71e-04	1.05e-04
108	48	0.19	7.24e-03	-0.04	-1.53e-04	5.66e-04	-1.42e-04
108	49	0.01	-0.14	-4.53e-03	4.62e-04	6.84e-05	-2.46e-05
108	50	5.82e-04	0.17	-0.03	-7.10e-04	2.60e-05	-1.24e-05
109	1	6.85e-03	6.98e-03	-0.02	-1.73e-04	4.80e-05	2.23e-05
109	2	6.87e-03	7.00e-03	-0.02	-1.75e-04	4.83e-05	2.21e-05
109	3	9.37e-03	8.54e-03	-0.03	-2.15e-04	7.42e-05	4.31e-05
109	4	9.39e-03	8.56e-03	-0.03	-2.17e-04	7.45e-05	4.29e-05
109	5	4.95e-03	5.13e-03	-0.02	-1.28e-04	3.45e-05	1.58e-05
109	6	4.97e-03	5.15e-03	-0.02	-1.30e-04	3.48e-05	1.55e-05
109	7	7.46e-03	6.68e-03	-0.02	-1.69e-04	6.08e-05	3.65e-05
109	8	7.48e-03	6.70e-03	-0.02	-1.71e-04	6.11e-05	3.63e-05
109	9	6.89e-03	7.03e-03	-0.02	-1.77e-04	4.85e-05	2.18e-05
109	10	8.62e-03	8.07e-03	-0.03	-2.02e-04	6.63e-05	3.69e-05
109	11	8.65e-03	8.12e-03	-0.03	-2.06e-04	6.69e-05	3.64e-05
109	12	4.98e-03	5.17e-03	-0.02	-1.32e-04	3.51e-05	1.53e-05
109	13	6.71e-03	6.21e-03	-0.02	-1.57e-04	5.29e-05	3.03e-05
109	14	6.75e-03	6.26e-03	-0.02	-1.61e-04	5.35e-05	2.98e-05
109	15	0.11	0.03	-0.02	-1.66e-04	3.03e-04	1.86e-05
109	16	0.12	-0.03	-0.02	-1.10e-04	3.28e-04	-7.73e-06
109	17	-0.11	0.04	-0.01	-1.78e-04	-2.38e-04	5.59e-05
109	18	-0.10	-0.02	-0.01	-1.23e-04	-2.13e-04	2.95e-05
109	19	0.11	0.03	-0.02	-1.64e-04	3.03e-04	9.48e-06
109	20	0.12	-0.03	-0.03	-1.12e-04	3.28e-04	1.42e-06
109	21	-0.11	0.04	-0.01	-1.77e-04	-2.38e-04	4.67e-05
109	22	-0.10	-0.02	-0.01	-1.24e-04	-2.13e-04	3.87e-05
109	23	0.13	0.02	-0.03	-1.57e-04	3.56e-04	-3.11e-06
109	24	0.14	-0.04	-0.03	-1.01e-04	3.81e-04	-2.95e-05
109	25	-0.13	0.05	-0.01	-1.87e-04	-2.91e-04	7.76e-05
109	26	-0.12	-7.67e-03	-0.01	-1.32e-04	-2.66e-04	5.12e-05
109	27	0.13	0.02	-0.03	-1.55e-04	3.56e-04	-1.23e-05
109	28	0.14	-0.04	-0.03	-1.03e-04	3.81e-04	-2.03e-05
109	29	-0.13	0.05	-0.01	-1.86e-04	-2.91e-04	6.85e-05
109	30	-0.12	-5.41e-03	-0.01	-1.33e-04	-2.66e-04	6.04e-05
109	31	0.02	0.10	-0.02	-2.35e-04	8.35e-05	6.24e-05
109	32	0.06	-0.10	-0.02	-4.94e-05	1.69e-04	-2.54e-05
109	33	-0.04	0.11	-0.01	-2.39e-04	-7.87e-05	7.36e-05
109	34	-9.04e-03	-0.09	-0.02	-5.32e-05	6.58e-06	-1.43e-05
109	35	0.03	0.10	-0.02	-2.33e-04	9.94e-05	5.59e-05
109	36	0.06	-0.10	-0.02	-4.68e-05	1.85e-04	-3.20e-05
109	37	-0.05	0.11	-0.01	-2.42e-04	-9.47e-05	8.01e-05
109	38	-0.02	-0.09	-0.02	-5.59e-05	-9.36e-06	-7.75e-06
109	39	0.02	0.10	-0.02	-2.30e-04	8.40e-05	3.19e-05
109	40	0.05	-0.09	-0.02	-5.52e-05	1.68e-04	5.06e-06
109	41	-0.04	0.10	-0.01	-2.34e-04	-7.82e-05	4.31e-05
109	42	-0.01	-0.09	-0.02	-5.89e-05	6.08e-06	1.62e-05
109	43	0.03	0.09	-0.02	-2.27e-04	9.99e-05	2.54e-05
109	44	0.06	-0.09	-0.02	-5.25e-05	1.84e-04	-1.46e-06
109	45	-0.05	0.10	-0.01	-2.36e-04	-9.42e-05	4.96e-05
109	46	-0.02	-0.08	-0.02	-6.16e-05	-9.86e-06	2.27e-05

109	47	-0.18	0.03	-7.55e-03	-1.62e-04	-4.20e-04	7.21e-05
109	48	0.19	-0.01	-0.03	-1.27e-04	5.10e-04	-2.40e-05
109	49	0.01	-0.15	-0.02	0.0	6.99e-05	-1.84e-05
109	50	-2.18e-03	0.16	-0.02	-2.88e-04	2.02e-05	6.65e-05
110	1	7.78e-03	0.01	-0.01	-5.80e-05	3.52e-05	0.0
110	2	7.80e-03	0.01	-0.01	-5.84e-05	3.55e-05	0.0
110	3	0.01	0.01	-0.02	-7.02e-05	6.04e-05	4.64e-06
110	4	0.01	0.01	-0.02	-7.07e-05	6.07e-05	4.63e-06
110	5	5.62e-03	8.03e-03	-0.01	-4.23e-05	2.52e-05	0.0
110	6	5.64e-03	8.08e-03	-0.01	-4.28e-05	2.55e-05	0.0
110	7	8.37e-03	0.01	-0.01	-5.46e-05	5.03e-05	4.56e-06
110	8	8.40e-03	0.01	-0.01	-5.51e-05	5.07e-05	4.55e-06
110	9	7.82e-03	0.01	-0.01	-5.89e-05	3.59e-05	0.0
110	10	9.71e-03	0.01	-0.02	-6.65e-05	5.28e-05	3.54e-06
110	11	9.75e-03	0.01	-0.02	-6.75e-05	5.35e-05	3.52e-06
110	12	5.67e-03	8.12e-03	-0.01	-4.33e-05	2.59e-05	0.0
110	13	7.55e-03	9.72e-03	-0.01	-5.09e-05	4.28e-05	3.46e-06
110	14	7.60e-03	9.80e-03	-0.01	-5.19e-05	4.35e-05	3.44e-06
110	15	0.11	0.03	-0.02	-1.17e-04	3.05e-04	-1.12e-05
110	16	0.12	-0.03	-0.02	8.45e-05	3.31e-04	-5.26e-05
110	17	-0.11	0.05	-8.64e-03	-1.79e-04	-2.61e-04	5.73e-05
110	18	-0.10	-0.01	-3.08e-03	2.26e-05	-2.34e-04	1.59e-05
110	19	0.11	0.02	-0.02	-9.65e-05	3.06e-04	-2.21e-05
110	20	0.12	-0.02	-0.02	6.39e-05	3.30e-04	-4.16e-05
110	21	-0.11	0.04	-7.96e-03	-1.58e-04	-2.60e-04	4.63e-05
110	22	-0.10	-6.73e-03	-3.76e-03	2.04e-06	-2.35e-04	2.69e-05
110	23	0.13	0.02	-0.02	-8.03e-05	3.56e-04	-3.73e-05
110	24	0.14	-0.04	-0.02	1.21e-04	3.82e-04	-7.87e-05
110	25	-0.13	0.06	-8.35e-03	-2.16e-04	-3.12e-04	8.34e-05
110	26	-0.12	-1.19e-03	-2.79e-03	-1.42e-05	-2.86e-04	4.20e-05
110	27	0.13	0.01	-0.02	-5.97e-05	3.57e-04	-4.83e-05
110	28	0.14	-0.04	-0.02	1.01e-04	3.82e-04	-6.77e-05
110	29	-0.13	0.05	-7.67e-03	-1.95e-04	-3.11e-04	7.25e-05
110	30	-0.12	5.37e-03	-3.48e-03	-3.48e-05	-2.86e-04	5.30e-05
110	31	0.02	0.11	-0.02	-3.74e-04	7.63e-05	6.11e-05
110	32	0.06	-0.10	-4.37e-03	2.98e-04	1.64e-04	-7.69e-05
110	33	-0.04	0.11	-0.02	-3.92e-04	-9.34e-05	8.16e-05
110	34	-8.11e-03	-0.09	-7.83e-04	2.79e-04	-5.83e-06	-5.64e-05
110	35	0.03	0.11	-0.02	-3.63e-04	9.17e-05	5.32e-05
110	36	0.06	-0.10	-4.46e-03	3.09e-04	1.79e-04	-8.48e-05
110	37	-0.05	0.12	-0.02	-4.04e-04	-1.09e-04	8.95e-05
110	38	-0.01	-0.09	-6.96e-04	2.68e-04	-2.12e-05	-4.85e-05
110	39	0.02	0.09	-0.02	-3.05e-04	7.87e-05	2.45e-05
110	40	0.06	-0.07	-6.65e-03	2.29e-04	1.61e-04	-4.03e-05
110	41	-0.04	0.09	-0.02	-3.24e-04	-9.10e-05	4.50e-05
110	42	-9.42e-03	-0.07	-3.06e-03	2.11e-04	-8.24e-06	-1.98e-05
110	43	0.03	0.08	-0.02	-2.94e-04	9.41e-05	1.66e-05
110	44	0.06	-0.08	-6.73e-03	2.40e-04	1.77e-04	-4.81e-05
110	45	-0.05	0.10	-0.02	-3.35e-04	-1.06e-04	5.29e-05
110	46	-0.02	-0.07	-2.97e-03	2.00e-04	-2.36e-05	-1.19e-05
110	47	-0.18	0.03	-2.50e-03	-1.23e-04	-4.48e-04	6.98e-05
110	48	0.19	-0.01	-0.02	2.88e-05	5.18e-04	-6.51e-05
110	49	0.02	-0.14	1.13e-03	4.35e-04	5.35e-05	-7.46e-05
110	50	-3.91e-03	0.16	-0.02	-5.29e-04	1.70e-05	7.93e-05
111	1	7.67e-03	0.01	-0.02	-1.59e-04	-7.72e-05	2.49e-05
111	2	7.69e-03	0.01	-0.02	-1.60e-04	-7.73e-05	2.47e-05
111	3	0.01	0.01	-0.02	-1.70e-04	-9.19e-05	3.94e-05
111	4	0.01	0.01	-0.02	-1.72e-04	-9.20e-05	3.92e-05
111	5	5.54e-03	7.57e-03	-0.02	-1.19e-04	-5.83e-05	1.78e-05
111	6	5.56e-03	7.61e-03	-0.02	-1.21e-04	-5.84e-05	1.76e-05
111	7	8.22e-03	9.69e-03	-0.02	-1.31e-04	-7.30e-05	3.24e-05
111	8	8.24e-03	9.72e-03	-0.02	-1.32e-04	-7.31e-05	3.22e-05
111	9	7.72e-03	0.01	-0.02	-1.62e-04	-7.74e-05	2.45e-05
111	10	9.54e-03	0.01	-0.02	-1.67e-04	-8.75e-05	3.51e-05
111	11	9.59e-03	0.01	-0.02	-1.69e-04	-8.77e-05	3.47e-05
111	12	5.59e-03	7.65e-03	-0.02	-1.22e-04	-5.85e-05	1.74e-05
111	13	7.41e-03	9.05e-03	-0.02	-1.27e-04	-6.86e-05	2.80e-05
111	14	7.46e-03	9.13e-03	-0.02	-1.30e-04	-6.88e-05	2.76e-05
111	15	0.11	0.03	-9.08e-03	-2.03e-04	2.55e-04	3.55e-06
111	16	0.12	-0.04	-0.02	-1.13e-04	2.17e-04	-1.15e-05
111	17	-0.11	0.06	-0.02	-1.35e-04	-3.45e-04	5.88e-05
111	18	-0.10	-8.32e-03	-0.02	-4.51e-05	-3.83e-04	4.37e-05
111	19	0.11	0.02	-9.89e-03	-1.93e-04	2.47e-04	0.0
111	20	0.12	-0.03	-0.02	-1.23e-04	2.25e-04	-7.40e-06
111	21	-0.11	0.05	-0.02	-1.25e-04	-3.53e-04	5.47e-05
111	22	-0.10	-9.38e-04	-0.02	-5.52e-05	-3.76e-04	4.79e-05
111	23	0.13	1.64e-03	-9.87e-03	-1.94e-04	2.96e-04	-2.67e-05

111	24	0.14	-0.06	-0.02	-1.05e-04	2.58e-04	-4.18e-05
111	25	-0.13	0.08	-0.02	-1.43e-04	-3.86e-04	8.91e-05
111	26	-0.12	0.02	-0.02	-5.33e-05	-4.25e-04	7.40e-05
111	27	0.13	-5.75e-03	-0.01	-1.84e-04	2.89e-04	-3.08e-05
111	28	0.14	-0.06	-0.02	-1.15e-04	2.66e-04	-3.76e-05
111	29	-0.13	0.07	-0.02	-1.33e-04	-3.94e-04	8.49e-05
111	30	-0.12	0.02	-0.02	-6.34e-05	-4.17e-04	7.81e-05
111	31	0.02	0.11	-4.04e-03	-2.84e-04	8.96e-05	4.05e-05
111	32	0.06	-0.10	-0.03	1.54e-05	-3.78e-05	-9.80e-06
111	33	-0.04	0.12	-6.53e-03	-2.63e-04	-9.06e-05	5.71e-05
111	34	-8.29e-03	-0.10	-0.03	3.58e-05	-2.18e-04	6.79e-06
111	35	0.03	0.11	-4.28e-03	-2.81e-04	1.02e-04	3.14e-05
111	36	0.06	-0.11	-0.03	1.79e-05	-2.54e-05	-1.89e-05
111	37	-0.05	0.13	-6.30e-03	-2.66e-04	-1.03e-04	6.62e-05
111	38	-0.01	-0.09	-0.03	3.33e-05	-2.30e-04	1.59e-05
111	39	0.02	0.09	-6.74e-03	-2.50e-04	6.39e-05	2.67e-05
111	40	0.06	-0.08	-0.02	-1.83e-05	-1.21e-05	4.02e-06
111	41	-0.04	0.10	-9.23e-03	-2.29e-04	-1.16e-04	4.33e-05
111	42	-9.67e-03	-0.07	-0.03	2.10e-06	-1.92e-04	2.06e-05
111	43	0.03	0.08	-6.98e-03	-2.47e-04	7.62e-05	1.76e-05
111	44	0.06	-0.09	-0.02	-1.58e-05	0.0	-5.05e-06
111	45	-0.05	0.10	-9.00e-03	-2.32e-04	-1.29e-04	5.23e-05
111	46	-0.02	-0.06	-0.03	0.0	-2.05e-04	2.97e-05
111	47	-0.18	0.05	-0.02	-8.47e-05	-5.67e-04	9.00e-05
111	48	0.19	-0.04	-0.01	-1.63e-04	4.39e-04	-4.27e-05
111	49	0.02	-0.15	-0.03	8.81e-05	-1.19e-04	7.83e-06
111	50	-3.74e-03	0.16	-6.42e-04	-3.36e-04	-9.73e-06	3.95e-05
112	1	0.03	0.04	-0.05	-5.70e-05	6.90e-05	1.78e-05
112	2	0.03	0.04	-0.06	-6.70e-05	7.80e-05	1.87e-05
112	3	0.03	0.05	-0.06	-6.26e-05	6.97e-05	2.15e-05
112	4	0.03	0.05	-0.06	-7.26e-05	7.87e-05	2.24e-05
112	5	0.02	0.03	-0.04	-4.65e-05	5.02e-05	1.28e-05
112	6	0.02	0.03	-0.04	-5.66e-05	5.92e-05	1.37e-05
112	7	0.03	0.04	-0.05	-5.21e-05	5.10e-05	1.65e-05
112	8	0.03	0.04	-0.05	-6.22e-05	5.99e-05	1.74e-05
112	9	0.03	0.04	-0.06	-7.70e-05	8.69e-05	1.96e-05
112	10	0.03	0.05	-0.06	-6.09e-05	6.95e-05	2.03e-05
112	11	0.03	0.05	-0.06	-8.10e-05	8.75e-05	2.22e-05
112	12	0.02	0.03	-0.04	-6.66e-05	6.81e-05	1.46e-05
112	13	0.02	0.04	-0.04	-5.04e-05	5.07e-05	1.53e-05
112	14	0.03	0.04	-0.05	-7.05e-05	6.87e-05	1.72e-05
112	15	0.20	0.11	-0.05	-1.72e-04	1.18e-04	-1.25e-05
112	16	0.18	-0.02	-0.04	2.78e-05	1.08e-04	-5.14e-05
112	17	-0.13	0.09	-0.04	-1.25e-04	-7.24e-06	7.98e-05
112	18	-0.16	-0.05	-0.04	7.43e-05	-1.75e-05	4.09e-05
112	19	0.18	0.12	-0.05	-1.92e-04	1.17e-04	-2.62e-05
112	20	0.20	-0.03	-0.04	4.78e-05	1.10e-04	-3.76e-05
112	21	-0.16	0.10	-0.04	-1.45e-04	-9.05e-06	6.61e-05
112	22	-0.14	-0.06	-0.04	9.44e-05	-1.57e-05	5.47e-05
112	23	0.16	0.13	-0.05	-1.89e-04	1.01e-04	-4.58e-05
112	24	0.13	-5.82e-03	-0.04	1.11e-05	9.08e-05	-8.47e-05
112	25	-0.09	0.07	-0.04	-1.09e-04	1.02e-05	1.13e-04
112	26	-0.12	-0.06	-0.04	9.10e-05	0.0	7.43e-05
112	27	0.14	0.14	-0.05	-2.09e-04	9.92e-05	-5.96e-05
112	28	0.16	-0.02	-0.04	3.11e-05	9.26e-05	-7.10e-05
112	29	-0.11	0.08	-0.04	-1.29e-04	8.40e-06	9.94e-05
112	30	-0.09	-0.07	-0.04	1.11e-04	1.77e-06	8.81e-05
112	31	0.11	0.26	-0.05	-3.88e-04	8.64e-05	6.52e-05
112	32	0.03	-0.18	-0.03	2.77e-04	5.23e-05	-6.44e-05
112	33	0.01	0.25	-0.05	-3.74e-04	4.87e-05	9.29e-05
112	34	-0.07	-0.19	-0.03	2.91e-04	1.46e-05	-3.67e-05
112	35	0.10	0.27	-0.05	-3.93e-04	8.12e-05	5.52e-05
112	36	0.02	-0.18	-0.03	2.72e-04	4.71e-05	-7.44e-05
112	37	0.03	0.25	-0.05	-3.69e-04	5.39e-05	1.03e-04
112	38	-0.06	-0.20	-0.03	2.96e-04	1.98e-05	-2.67e-05
112	39	0.04	0.29	-0.05	-4.55e-04	8.04e-05	1.93e-05
112	40	0.11	-0.22	-0.03	3.44e-04	5.83e-05	-1.85e-05
112	41	-0.06	0.28	-0.05	-4.41e-04	4.27e-05	4.70e-05
112	42	4.28e-03	-0.22	-0.03	3.58e-04	2.06e-05	9.14e-06
112	43	0.03	0.30	-0.05	-4.60e-04	7.52e-05	9.31e-06
112	44	0.09	-0.21	-0.03	3.39e-04	5.31e-05	-2.86e-05
112	45	-0.05	0.28	-0.05	-4.36e-04	4.79e-05	5.70e-05
112	46	0.02	-0.23	-0.03	3.63e-04	2.58e-05	1.92e-05
112	47	-0.20	2.62e-03	-0.04	0.0	-2.69e-05	1.16e-04
112	48	0.24	0.07	-0.05	-9.68e-05	1.28e-04	-8.80e-05
112	49	0.03	-0.34	-0.02	5.34e-04	4.39e-05	-4.61e-05
112	50	9.77e-03	0.41	-0.06	-6.32e-04	5.71e-05	7.45e-05

113	1	0.02	0.12	-0.10	-3.66e-04	6.84e-05	-2.01e-05
113	2	0.03	0.12	-0.10	-3.76e-04	7.77e-05	-1.96e-05
113	3	0.03	0.13	-0.12	-3.88e-04	6.99e-05	-2.29e-05
113	4	0.03	0.13	-0.12	-3.97e-04	7.92e-05	-2.23e-05
113	5	0.02	0.08	-0.07	-2.61e-04	4.93e-05	-1.56e-05
113	6	0.02	0.09	-0.08	-2.70e-04	5.87e-05	-1.51e-05
113	7	0.02	0.10	-0.09	-2.82e-04	5.08e-05	-1.84e-05
113	8	0.02	0.10	-0.09	-2.92e-04	6.01e-05	-1.79e-05
113	9	0.03	0.12	-0.11	-3.85e-04	8.70e-05	-1.90e-05
113	10	0.03	0.13	-0.11	-3.81e-04	6.94e-05	-2.21e-05
113	11	0.03	0.13	-0.12	-4.00e-04	8.80e-05	-2.09e-05
113	12	0.02	0.09	-0.08	-2.79e-04	6.80e-05	-1.45e-05
113	13	0.02	0.09	-0.08	-2.76e-04	5.04e-05	-1.76e-05
113	14	0.02	0.09	-0.09	-2.95e-04	6.90e-05	-1.65e-05
113	15	0.21	0.16	-0.09	-3.75e-04	1.09e-04	-3.40e-05
113	16	0.23	0.04	-0.08	-2.01e-04	1.16e-04	-7.93e-05
113	17	-0.19	0.14	-0.08	-3.37e-04	-1.62e-05	4.58e-05
113	18	-0.17	0.01	-0.08	-1.64e-04	-9.60e-06	0.0
113	19	0.23	0.17	-0.09	-3.91e-04	1.10e-04	-4.88e-05
113	20	0.21	0.03	-0.08	-1.85e-04	1.16e-04	-6.45e-05
113	21	-0.17	0.15	-0.08	-3.54e-04	-1.57e-05	3.10e-05
113	22	-0.19	3.28e-03	-0.07	-1.47e-04	-1.01e-05	1.52e-05
113	23	0.25	0.18	-0.09	-3.89e-04	1.23e-04	-8.09e-05
113	24	0.27	0.05	-0.08	-2.15e-04	1.30e-04	-1.26e-04
113	25	-0.23	0.13	-0.08	-3.24e-04	-2.98e-05	9.27e-05
113	26	-0.21	-3.19e-04	-0.07	-1.50e-04	-2.32e-05	4.74e-05
113	27	0.27	0.19	-0.09	-4.05e-04	1.24e-04	-9.57e-05
113	28	0.25	0.04	-0.08	-1.99e-04	1.29e-04	-1.11e-04
113	29	-0.22	0.14	-0.08	-3.40e-04	-2.93e-05	7.79e-05
113	30	-0.23	-9.16e-03	-0.07	-1.34e-04	-2.37e-05	6.22e-05
113	31	0.04	0.31	-0.09	-5.64e-04	5.78e-05	4.68e-05
113	32	0.11	-0.12	-0.07	1.42e-05	7.98e-05	-1.04e-04
113	33	-0.07	0.30	-0.09	-5.53e-04	2.01e-05	7.07e-05
113	34	-5.59e-03	-0.13	-0.07	2.54e-05	4.21e-05	-8.03e-05
113	35	0.06	0.31	-0.09	-5.68e-04	6.18e-05	3.27e-05
113	36	0.13	-0.12	-0.07	1.00e-05	8.39e-05	-1.18e-04
113	37	-0.09	0.29	-0.09	-5.49e-04	1.60e-05	8.48e-05
113	38	-0.02	-0.13	-0.07	2.96e-05	3.80e-05	-6.62e-05
113	39	0.11	0.33	-0.09	-6.19e-04	5.95e-05	-2.44e-06
113	40	0.05	-0.15	-0.07	6.89e-05	7.81e-05	-5.50e-05
113	41	-0.01	0.33	-0.09	-6.08e-04	2.18e-05	2.15e-05
113	42	-0.07	-0.16	-0.07	8.01e-05	4.04e-05	-3.11e-05
113	43	0.12	0.34	-0.09	-6.23e-04	6.36e-05	-1.65e-05
113	44	0.07	-0.15	-0.07	6.47e-05	8.21e-05	-6.91e-05
113	45	-0.03	0.32	-0.09	-6.04e-04	1.77e-05	3.56e-05
113	46	-0.08	-0.16	-0.07	8.43e-05	3.63e-05	-1.70e-05
113	47	-0.33	0.06	-0.08	-2.30e-04	-5.94e-05	8.79e-05
113	48	0.37	0.12	-0.08	-3.08e-04	1.59e-04	-1.21e-04
113	49	0.03	-0.28	-0.06	2.35e-04	5.46e-05	-9.06e-05
113	50	5.11e-03	0.45	-0.10	-7.74e-04	4.52e-05	5.70e-05
114	1	-9.64e-04	-3.81e-05	-0.06	-2.94e-05	-2.14e-04	2.09e-05
114	2	-9.71e-04	-5.27e-05	-0.06	-2.91e-05	-2.15e-04	2.12e-05
114	3	-1.06e-03	1.01e-04	-0.07	-4.57e-05	-2.46e-04	1.91e-05
114	4	-1.06e-03	8.64e-05	-0.07	-4.54e-05	-2.47e-04	1.94e-05
114	5	-7.24e-04	-2.90e-05	-0.05	-2.13e-05	-1.60e-04	1.59e-05
114	6	-7.31e-04	-4.36e-05	-0.05	-2.10e-05	-1.61e-04	1.62e-05
114	7	-8.18e-04	1.10e-04	-0.05	-3.76e-05	-1.91e-04	1.41e-05
114	8	-8.25e-04	9.55e-05	-0.06	-3.73e-05	-1.93e-04	1.44e-05
114	9	-9.78e-04	-6.73e-05	-0.06	-2.88e-05	-2.17e-04	2.15e-05
114	10	-1.03e-03	5.93e-05	-0.07	-4.08e-05	-2.36e-04	1.96e-05
114	11	-1.04e-03	3.01e-05	-0.07	-4.02e-05	-2.39e-04	2.03e-05
114	12	-7.38e-04	-5.82e-05	-0.05	-2.07e-05	-1.62e-04	1.65e-05
114	13	-7.90e-04	6.84e-05	-0.05	-3.27e-05	-1.82e-04	1.46e-05
114	14	-8.04e-04	3.92e-05	-0.05	-3.21e-05	-1.85e-04	1.52e-05
114	15	3.69e-03	-6.90e-03	-0.05	-2.29e-05	-8.76e-05	4.17e-05
114	16	4.92e-03	-0.01	-0.05	-3.22e-06	-7.22e-05	5.06e-05
114	17	-6.44e-03	0.01	-0.05	-5.25e-05	-2.73e-04	-2.03e-05
114	18	-5.21e-03	6.96e-03	-0.05	-3.28e-05	-2.57e-04	-1.14e-05
114	19	3.97e-03	-7.85e-03	-0.05	-2.05e-05	-8.57e-05	4.09e-05
114	20	4.64e-03	-0.01	-0.05	-5.60e-06	-7.41e-05	5.14e-05
114	21	-6.16e-03	0.01	-0.05	-5.01e-05	-2.71e-04	-2.11e-05
114	22	-5.49e-03	7.90e-03	-0.05	-3.52e-05	-2.59e-04	-1.06e-05
114	23	5.64e-03	-0.01	-0.05	-1.34e-05	-6.00e-05	4.79e-05
114	24	6.88e-03	-0.02	-0.05	6.30e-06	-4.46e-05	5.68e-05
114	25	-8.40e-03	0.02	-0.05	-6.20e-05	-3.00e-04	-2.65e-05
114	26	-7.17e-03	0.01	-0.05	-4.23e-05	-2.85e-04	-1.75e-05
114	27	5.92e-03	-0.01	-0.05	-1.10e-05	-5.81e-05	4.71e-05

114	28	6.60e-03	-0.02	-0.05	3.92e-06	-4.65e-05	5.76e-05
114	29	-8.12e-03	0.02	-0.05	-5.96e-05	-2.98e-04	-2.73e-05
114	30	-7.45e-03	0.01	-0.05	-4.47e-05	-2.87e-04	-1.68e-05
114	31	-1.30e-03	5.66e-03	-0.05	-5.62e-05	-1.70e-04	9.47e-06
114	32	2.81e-03	-0.01	-0.05	9.35e-06	-1.19e-04	3.94e-05
114	33	-4.34e-03	0.01	-0.05	-6.50e-05	-2.26e-04	-9.13e-06
114	34	-2.26e-04	-5.61e-03	-0.05	0.0	-1.74e-04	2.08e-05
114	35	-7.10e-04	4.30e-03	-0.05	-5.33e-05	-1.62e-04	1.13e-05
114	36	3.40e-03	-0.01	-0.05	1.22e-05	-1.11e-04	4.13e-05
114	37	-4.92e-03	0.01	-0.05	-6.79e-05	-2.34e-04	-1.10e-05
114	38	-8.14e-04	-4.24e-03	-0.05	-2.38e-06	-1.83e-04	1.90e-05
114	39	-3.64e-04	2.51e-03	-0.05	-4.82e-05	-1.64e-04	6.84e-06
114	40	1.88e-03	-8.14e-03	-0.05	1.42e-06	-1.25e-04	4.21e-05
114	41	-3.40e-03	8.19e-03	-0.05	-5.71e-05	-2.19e-04	-1.18e-05
114	42	-1.16e-03	-2.46e-03	-0.05	-7.45e-06	-1.81e-04	2.35e-05
114	43	2.24e-04	1.14e-03	-0.05	-4.54e-05	-1.56e-04	8.70e-06
114	44	2.47e-03	-9.51e-03	-0.05	4.28e-06	-1.17e-04	4.39e-05
114	45	-3.99e-03	9.56e-03	-0.05	-6.00e-05	-2.28e-04	-1.36e-05
114	46	-1.75e-03	-1.09e-03	-0.05	-1.03e-05	-1.89e-04	2.16e-05
114	47	-0.01	0.02	-0.05	-5.95e-05	-3.40e-04	-3.84e-05
114	48	8.87e-03	-0.02	-0.05	3.86e-06	-4.25e-06	6.87e-05
114	49	1.17e-03	-0.01	-0.05	1.78e-05	-1.46e-04	4.02e-05
114	50	-2.69e-03	0.01	-0.05	-7.34e-05	-1.99e-04	-9.89e-06
115	1	0.02	0.10	-0.10	-2.99e-04	7.98e-05	6.20e-05
115	2	0.03	0.10	-0.10	-3.02e-04	9.46e-05	6.24e-05
115	3	0.03	0.11	-0.11	-3.22e-04	7.90e-05	6.63e-05
115	4	0.03	0.11	-0.11	-3.26e-04	9.38e-05	6.66e-05
115	5	0.02	0.07	-0.07	-2.18e-04	5.74e-05	4.36e-05
115	6	0.02	0.07	-0.07	-2.22e-04	7.23e-05	4.39e-05
115	7	0.02	0.09	-0.09	-2.41e-04	5.66e-05	4.79e-05
115	8	0.02	0.09	-0.09	-2.45e-04	7.15e-05	4.82e-05
115	9	0.03	0.10	-0.10	-3.06e-04	1.09e-04	6.27e-05
115	10	0.03	0.11	-0.11	-3.15e-04	7.92e-05	6.50e-05
115	11	0.03	0.11	-0.11	-3.23e-04	1.09e-04	6.57e-05
115	12	0.02	0.08	-0.07	-2.25e-04	8.72e-05	4.43e-05
115	13	0.02	0.08	-0.08	-2.34e-04	5.69e-05	4.66e-05
115	14	0.02	0.08	-0.08	-2.42e-04	8.66e-05	4.73e-05
115	15	0.21	0.16	-0.08	-2.58e-04	1.31e-04	0.0
115	16	0.23	0.05	-0.07	-1.44e-04	1.22e-04	2.16e-05
115	17	-0.19	0.10	-0.08	-3.11e-04	-7.82e-06	6.90e-05
115	18	-0.17	6.79e-04	-0.08	-1.97e-04	-1.68e-05	9.01e-05
115	19	0.23	0.18	-0.08	-2.91e-04	1.30e-04	-7.46e-06
115	20	0.21	0.03	-0.07	-1.11e-04	1.24e-04	2.95e-05
115	21	-0.17	0.12	-0.09	-3.43e-04	-9.32e-06	6.11e-05
115	22	-0.19	-0.02	-0.08	-1.64e-04	-1.53e-05	9.80e-05
115	23	0.25	0.20	-0.08	-3.47e-04	1.49e-04	-5.12e-05
115	24	0.27	0.10	-0.07	-2.33e-04	1.40e-04	-3.00e-05
115	25	-0.23	0.06	-0.08	-2.21e-04	-2.57e-05	1.21e-04
115	26	-0.21	-0.04	-0.08	-1.07e-04	-3.47e-05	1.42e-04
115	27	0.27	0.22	-0.08	-3.80e-04	1.47e-04	-5.91e-05
115	28	0.26	0.08	-0.07	-2.00e-04	1.42e-04	-2.22e-05
115	29	-0.22	0.08	-0.08	-2.54e-04	-2.72e-05	1.13e-04
115	30	-0.23	-0.06	-0.08	-7.47e-05	-3.32e-05	1.50e-04
115	31	0.05	0.26	-0.09	-4.09e-04	9.30e-05	0.0
115	32	0.11	-0.09	-0.07	-2.92e-05	6.30e-05	7.03e-05
115	33	-0.07	0.24	-0.09	-4.25e-04	5.13e-05	2.03e-05
115	34	-5.44e-03	-0.10	-0.07	-4.50e-05	2.13e-05	9.09e-05
115	35	0.06	0.27	-0.09	-4.36e-04	9.83e-05	-1.58e-05
115	36	0.13	-0.07	-0.07	-5.60e-05	6.83e-05	5.48e-05
115	37	-0.09	0.23	-0.09	-3.98e-04	4.59e-05	3.58e-05
115	38	-0.02	-0.11	-0.07	-1.83e-05	1.59e-05	1.06e-04
115	39	0.11	0.33	-0.09	-5.18e-04	8.80e-05	-2.66e-05
115	40	0.05	-0.15	-0.07	7.98e-05	6.80e-05	9.66e-05
115	41	-0.01	0.31	-0.09	-5.34e-04	4.63e-05	-6.00e-06
115	42	-0.07	-0.17	-0.07	6.39e-05	2.63e-05	1.17e-04
115	43	0.12	0.34	-0.09	-5.45e-04	9.33e-05	-4.21e-05
115	44	0.07	-0.14	-0.07	5.30e-05	7.34e-05	8.11e-05
115	45	-0.03	0.30	-0.09	-5.07e-04	4.09e-05	9.49e-06
115	46	-0.08	-0.18	-0.07	9.07e-05	2.09e-05	1.33e-04
115	47	-0.33	2.89e-04	-0.08	-2.92e-04	-6.61e-05	1.45e-04
115	48	0.37	0.16	-0.07	-1.62e-04	1.80e-04	-5.42e-05
115	49	0.03	-0.24	-0.06	1.53e-04	4.89e-05	8.13e-05
115	50	7.09e-03	0.40	-0.09	-6.08e-04	6.54e-05	9.27e-06
116	1	0.01	0.03	-0.10	-2.58e-04	-4.69e-06	-6.17e-05
116	2	0.01	0.03	-0.10	-2.60e-04	-3.71e-06	-6.05e-05
116	3	0.02	0.04	-0.11	-2.79e-04	-4.47e-06	-6.65e-05
116	4	0.02	0.04	-0.11	-2.80e-04	-3.49e-06	-6.52e-05

116	5	0.01	0.02	-0.07	-1.90e-04	-3.33e-06	-4.53e-05
116	6	0.01	0.02	-0.08	-1.92e-04	-2.35e-06	-4.40e-05
116	7	0.01	0.03	-0.09	-2.11e-04	-3.11e-06	-5.00e-05
116	8	0.01	0.03	-0.09	-2.12e-04	-2.14e-06	-4.87e-05
116	9	0.01	0.03	-0.10	-2.61e-04	-2.73e-06	-5.92e-05
116	10	0.02	0.04	-0.11	-2.73e-04	-4.53e-06	-6.50e-05
116	11	0.02	0.04	-0.11	-2.75e-04	-2.58e-06	-6.25e-05
116	12	0.01	0.02	-0.08	-1.93e-04	-1.38e-06	-4.28e-05
116	13	0.01	0.03	-0.08	-2.05e-04	-3.18e-06	-4.86e-05
116	14	0.01	0.03	-0.08	-2.07e-04	-1.22e-06	-4.61e-05
116	15	0.18	0.06	-0.09	-2.56e-04	7.92e-05	-5.77e-05
116	16	0.20	-0.05	-0.08	-1.72e-04	7.15e-05	-9.99e-05
116	17	-0.18	0.10	-0.08	-2.25e-04	-7.79e-05	5.56e-06
116	18	-0.16	-7.70e-03	-0.07	-1.41e-04	-8.57e-05	-3.67e-05
116	19	0.20	0.05	-0.09	-2.46e-04	7.81e-05	-7.19e-05
116	20	0.19	-0.04	-0.08	-1.82e-04	7.26e-05	-8.57e-05
116	21	-0.16	0.09	-0.08	-2.15e-04	-7.91e-05	-8.64e-06
116	22	-0.18	4.61e-03	-0.07	-1.51e-04	-8.45e-05	-2.25e-05
116	23	0.22	0.02	-0.09	-2.67e-04	9.09e-05	-1.04e-04
116	24	0.24	-0.09	-0.08	-1.82e-04	8.32e-05	-1.46e-04
116	25	-0.22	0.14	-0.08	-2.15e-04	-8.97e-05	5.20e-05
116	26	-0.20	0.03	-0.07	-1.30e-04	-9.74e-05	9.79e-06
116	27	0.24	9.39e-03	-0.08	-2.57e-04	8.98e-05	-1.18e-04
116	28	0.23	-0.08	-0.08	-1.93e-04	8.43e-05	-1.32e-04
116	29	-0.20	0.13	-0.08	-2.05e-04	-9.08e-05	3.78e-05
116	30	-0.22	0.04	-0.07	-1.40e-04	-9.63e-05	2.40e-05
116	31	0.03	0.21	-0.09	-3.44e-04	3.32e-05	1.38e-05
116	32	0.10	-0.16	-0.07	-6.25e-05	7.45e-06	-1.27e-04
116	33	-0.07	0.22	-0.09	-3.35e-04	-1.39e-05	3.27e-05
116	34	-0.01	-0.15	-0.07	-5.32e-05	-3.97e-05	-1.08e-04
116	35	0.05	0.19	-0.09	-3.47e-04	3.67e-05	0.0
116	36	0.11	-0.18	-0.07	-6.57e-05	1.10e-05	-1.41e-04
116	37	-0.09	0.23	-0.09	-3.32e-04	-1.75e-05	4.67e-05
116	38	-0.02	-0.14	-0.07	-5.00e-05	-4.32e-05	-9.42e-05
116	39	0.09	0.16	-0.09	-3.10e-04	2.95e-05	-3.36e-05
116	40	0.04	-0.12	-0.07	-9.62e-05	1.12e-05	-7.97e-05
116	41	-0.02	0.18	-0.08	-3.01e-04	-1.77e-05	-1.46e-05
116	42	-0.07	-0.11	-0.07	-8.69e-05	-3.59e-05	-6.08e-05
116	43	0.10	0.15	-0.09	-3.13e-04	3.30e-05	-4.75e-05
116	44	0.05	-0.14	-0.07	-9.94e-05	1.47e-05	-9.37e-05
116	45	-0.03	0.19	-0.08	-2.98e-04	-2.12e-05	0.0
116	46	-0.08	-0.10	-0.07	-8.37e-05	-3.95e-05	-4.68e-05
116	47	-0.30	0.09	-0.07	-1.74e-04	-1.36e-04	4.38e-05
116	48	0.33	-0.04	-0.09	-2.23e-04	1.30e-04	-1.38e-04
116	49	0.02	-0.24	-0.07	-1.11e-06	-1.00e-05	-1.13e-04
116	50	1.38e-04	0.29	-0.09	-3.96e-04	3.56e-06	1.90e-05
117	1	0.01	0.03	-0.06	-5.63e-05	1.02e-05	4.22e-05
117	2	0.01	0.03	-0.06	-5.68e-05	8.63e-06	4.23e-05
117	3	0.02	0.04	-0.07	-7.26e-05	1.87e-05	4.76e-05
117	4	0.02	0.04	-0.07	-7.31e-05	1.71e-05	4.76e-05
117	5	8.85e-03	0.02	-0.05	-4.09e-05	6.83e-06	3.15e-05
117	6	8.83e-03	0.02	-0.05	-4.14e-05	5.23e-06	3.16e-05
117	7	0.01	0.03	-0.05	-5.72e-05	1.53e-05	3.69e-05
117	8	0.01	0.03	-0.05	-5.77e-05	1.37e-05	3.69e-05
117	9	0.01	0.03	-0.06	-5.73e-05	7.03e-06	4.24e-05
117	10	0.02	0.03	-0.07	-6.77e-05	1.61e-05	4.60e-05
117	11	0.02	0.03	-0.07	-6.87e-05	1.29e-05	4.61e-05
117	12	8.81e-03	0.02	-0.05	-4.19e-05	3.62e-06	3.17e-05
117	13	0.01	0.03	-0.05	-5.23e-05	1.27e-05	3.53e-05
117	14	0.01	0.03	-0.05	-5.33e-05	9.52e-06	3.54e-05
117	15	0.19	0.06	-0.05	-1.11e-04	2.63e-04	6.98e-05
117	16	0.22	-0.05	-0.05	6.09e-05	3.04e-04	8.61e-05
117	17	-0.20	0.10	-0.05	-1.56e-04	-2.84e-04	-1.88e-05
117	18	-0.17	-0.01	-0.05	1.63e-05	-2.43e-04	-2.51e-06
117	19	0.21	0.05	-0.05	-9.28e-05	2.96e-04	6.46e-05
117	20	0.19	-0.04	-0.05	4.25e-05	2.71e-04	9.13e-05
117	21	-0.17	0.09	-0.05	-1.37e-04	-2.51e-04	-2.40e-05
117	22	-0.19	1.07e-03	-0.05	-2.03e-06	-2.76e-04	2.72e-06
117	23	0.25	0.02	-0.05	-5.24e-05	3.49e-04	6.92e-05
117	24	0.28	-0.09	-0.05	1.20e-04	3.90e-04	8.55e-05
117	25	-0.26	0.14	-0.05	-2.15e-04	-3.70e-04	-1.81e-05
117	26	-0.23	0.03	-0.05	-4.24e-05	-3.29e-04	-1.84e-06
117	27	0.28	6.49e-03	-0.05	-3.40e-05	3.82e-04	6.39e-05
117	28	0.26	-0.08	-0.05	1.01e-04	3.57e-04	9.07e-05
117	29	-0.24	0.13	-0.05	-1.96e-04	-3.36e-04	-2.34e-05
117	30	-0.26	0.04	-0.05	-6.08e-05	-3.62e-04	3.38e-06
117	31	0.02	0.20	-0.05	-3.28e-04	2.39e-05	1.98e-05

117	32	0.12	-0.17	-0.05	2.46e-04	1.61e-04	7.41e-05
117	33	-0.10	0.22	-0.05	-3.41e-04	-1.40e-04	-6.78e-06
117	34	3.25e-03	-0.16	-0.05	2.33e-04	-3.53e-06	4.75e-05
117	35	0.04	0.19	-0.05	-3.10e-04	4.97e-05	1.96e-05
117	36	0.14	-0.18	-0.05	2.64e-04	1.86e-04	7.39e-05
117	37	-0.12	0.23	-0.05	-3.59e-04	-1.66e-04	-6.58e-06
117	38	-0.02	-0.14	-0.05	2.15e-04	-2.93e-05	4.77e-05
117	39	0.10	0.16	-0.05	-2.66e-04	1.35e-04	2.39e-06
117	40	0.04	-0.13	-0.05	1.85e-04	4.99e-05	9.15e-05
117	41	-0.02	0.17	-0.05	-2.80e-04	-2.95e-05	-2.42e-05
117	42	-0.08	-0.12	-0.05	1.71e-04	-1.14e-04	6.49e-05
117	43	0.12	0.15	-0.05	-2.49e-04	1.60e-04	2.19e-06
117	44	0.06	-0.14	-0.05	2.02e-04	7.57e-05	9.13e-05
117	45	-0.04	0.19	-0.05	-2.97e-04	-5.53e-05	-2.40e-05
117	46	-0.10	-0.10	-0.05	1.54e-04	-1.40e-04	6.51e-05
117	47	-0.35	0.09	-0.04	-1.32e-04	-4.94e-04	-3.40e-05
117	48	0.37	-0.04	-0.06	3.75e-05	5.15e-04	1.01e-04
117	49	0.03	-0.24	-0.05	3.61e-04	3.63e-05	8.97e-05
117	50	-8.13e-03	0.29	-0.05	-4.56e-04	-1.59e-05	-2.23e-05
118	1	4.35e-04	5.45e-04	-0.05	1.55e-05	-1.24e-05	3.19e-05
118	2	4.44e-04	5.27e-04	-0.05	1.55e-05	-1.24e-05	3.19e-05
118	3	3.75e-04	8.43e-04	-0.06	2.08e-05	-9.73e-06	3.92e-05
118	4	3.83e-04	8.26e-04	-0.06	2.08e-05	-9.70e-06	3.93e-05
118	5	3.47e-04	4.04e-04	-0.04	1.15e-05	-9.73e-06	2.35e-05
118	6	3.55e-04	3.86e-04	-0.04	1.16e-05	-9.69e-06	2.36e-05
118	7	2.86e-04	7.03e-04	-0.05	1.68e-05	-7.06e-06	3.08e-05
118	8	2.95e-04	6.85e-04	-0.05	1.68e-05	-7.03e-06	3.09e-05
118	9	4.52e-04	5.10e-04	-0.05	1.55e-05	-1.23e-05	3.20e-05
118	10	3.93e-04	7.54e-04	-0.06	1.92e-05	-1.05e-05	3.70e-05
118	11	4.10e-04	7.19e-04	-0.06	1.92e-05	-1.05e-05	3.71e-05
118	12	3.64e-04	3.69e-04	-0.04	1.16e-05	-9.66e-06	2.36e-05
118	13	3.04e-04	6.13e-04	-0.04	1.52e-05	-7.86e-06	2.86e-05
118	14	3.21e-04	5.78e-04	-0.04	1.53e-05	-7.79e-06	2.87e-05
118	15	0.02	-5.84e-03	-0.05	-2.14e-05	1.62e-04	4.03e-05
118	16	0.02	-0.01	-0.04	8.23e-05	1.90e-04	4.63e-05
118	17	-0.02	0.01	-0.04	-5.50e-05	-2.08e-04	6.54e-06
118	18	-0.01	6.89e-03	-0.04	4.87e-05	-1.79e-04	1.26e-05
118	19	0.02	-7.08e-03	-0.05	-1.00e-05	1.86e-04	3.82e-05
118	20	0.02	-0.01	-0.04	7.09e-05	1.67e-04	4.84e-05
118	21	-0.02	0.01	-0.04	-4.36e-05	-1.84e-04	4.47e-06
118	22	-0.02	8.13e-03	-0.04	3.73e-05	-2.03e-04	1.47e-05
118	23	0.02	-0.01	-0.05	1.12e-05	2.27e-04	3.99e-05
118	24	0.03	-0.02	-0.04	1.15e-04	2.56e-04	4.60e-05
118	25	-0.03	0.02	-0.04	-8.75e-05	-2.73e-04	6.90e-06
118	26	-0.02	0.01	-0.04	1.61e-05	-2.44e-04	1.30e-05
118	27	0.02	-0.01	-0.05	2.25e-05	2.51e-04	3.78e-05
118	28	0.03	-0.02	-0.04	1.03e-04	2.32e-04	4.80e-05
118	29	-0.03	0.02	-0.04	-7.62e-05	-2.49e-04	4.84e-06
118	30	-0.02	0.01	-0.04	4.78e-06	-2.68e-04	1.50e-05
118	31	-2.66e-03	9.84e-03	-0.05	-1.54e-04	0.0	2.14e-05
118	32	0.01	-0.01	-0.04	1.91e-04	9.41e-05	4.16e-05
118	33	-0.01	0.02	-0.04	-1.64e-04	-1.11e-04	1.13e-05
118	34	3.30e-03	-8.79e-03	-0.04	1.81e-04	-1.68e-05	3.15e-05
118	35	-4.91e-04	8.22e-03	-0.05	-1.44e-04	1.90e-05	2.13e-05
118	36	0.02	-0.02	-0.04	2.01e-04	1.14e-04	4.15e-05
118	37	-0.02	0.02	-0.04	-1.74e-04	-1.31e-04	1.14e-05
118	38	1.14e-03	-7.18e-03	-0.04	1.72e-04	-3.64e-05	3.16e-05
118	39	1.37e-03	5.70e-03	-0.05	-1.16e-04	7.84e-05	1.45e-05
118	40	9.56e-03	-0.01	-0.04	1.54e-04	1.51e-05	4.85e-05
118	41	-8.92e-03	0.01	-0.04	-1.26e-04	-3.24e-05	4.40e-06
118	42	-7.27e-04	-4.65e-03	-0.04	1.44e-04	-9.58e-05	3.83e-05
118	43	3.54e-03	4.09e-03	-0.05	-1.06e-04	9.80e-05	1.44e-05
118	44	0.01	-0.01	-0.04	1.63e-04	3.47e-05	4.84e-05
118	45	-0.01	0.01	-0.04	-1.36e-04	-5.20e-05	4.51e-06
118	46	-2.89e-03	-3.04e-03	-0.04	1.34e-04	-1.15e-04	3.85e-05
118	47	-0.03	0.02	-0.04	-4.05e-05	-3.55e-04	0.0
118	48	0.03	-0.02	-0.05	6.78e-05	3.38e-04	5.20e-05
118	49	8.04e-03	-0.02	-0.04	2.59e-04	-2.32e-05	4.75e-05
118	50	-7.39e-03	0.02	-0.05	-2.32e-04	5.90e-06	5.33e-06
119	1	0.01	0.03	-0.15	-1.73e-06	2.34e-05	6.14e-05
119	2	0.01	0.03	-0.15	-4.33e-06	2.48e-05	6.10e-05
119	3	0.02	0.04	-0.17	-1.87e-05	1.72e-05	6.95e-05
119	4	0.02	0.04	-0.17	-2.13e-05	1.87e-05	6.91e-05
119	5	9.83e-03	0.02	-0.11	-7.17e-06	1.54e-05	4.10e-05
119	6	9.91e-03	0.02	-0.11	-9.76e-06	1.68e-05	4.06e-05
119	7	0.01	0.03	-0.13	-2.41e-05	9.22e-06	4.91e-05
119	8	0.01	0.03	-0.13	-2.67e-05	1.07e-05	4.87e-05

119	9	0.01	0.03	-0.15	-6.92e-06	2.63e-05	6.06e-05
119	10	0.02	0.04	-0.16	-1.36e-05	1.91e-05	6.71e-05
119	11	0.02	0.04	-0.17	-1.88e-05	2.20e-05	6.62e-05
119	12	9.98e-03	0.02	-0.11	-1.24e-05	1.83e-05	4.02e-05
119	13	0.01	0.03	-0.13	-1.90e-05	1.11e-05	4.67e-05
119	14	0.01	0.03	-0.13	-2.42e-05	1.40e-05	4.58e-05
119	15	0.19	0.07	-0.12	-7.72e-05	1.04e-04	-3.24e-05
119	16	0.22	-0.03	-0.11	3.08e-05	1.17e-04	-7.16e-05
119	17	-0.19	0.08	-0.12	-5.87e-05	-9.12e-05	1.60e-04
119	18	-0.16	-0.02	-0.12	4.93e-05	-7.85e-05	1.21e-04
119	19	0.21	0.06	-0.12	-7.42e-05	1.15e-04	-4.47e-05
119	20	0.19	-0.03	-0.11	2.77e-05	1.06e-04	-5.93e-05
119	21	-0.17	0.08	-0.12	-5.56e-05	-8.03e-05	1.48e-04
119	22	-0.19	-0.01	-0.12	4.63e-05	-8.94e-05	1.33e-04
119	23	0.25	0.05	-0.12	-7.86e-05	1.32e-04	-9.21e-05
119	24	0.28	-0.05	-0.11	2.94e-05	1.45e-04	-1.31e-04
119	25	-0.26	0.10	-0.12	-5.73e-05	-1.19e-04	2.20e-04
119	26	-0.23	-8.48e-04	-0.12	5.07e-05	-1.06e-04	1.81e-04
119	27	0.28	0.05	-0.12	-7.55e-05	1.43e-04	-1.04e-04
119	28	0.26	-0.04	-0.11	2.63e-05	1.34e-04	-1.19e-04
119	29	-0.23	0.10	-0.12	-5.42e-05	-1.08e-04	2.08e-04
119	30	-0.25	2.78e-03	-0.12	4.77e-05	-1.17e-04	1.93e-04
119	31	0.02	0.19	-0.13	-1.97e-04	2.11e-05	8.09e-05
119	32	0.12	-0.14	-0.11	1.63e-04	6.33e-05	-5.01e-05
119	33	-0.10	0.20	-0.13	-1.91e-04	-3.75e-05	1.39e-04
119	34	4.40e-03	-0.14	-0.11	1.69e-04	4.68e-06	7.68e-06
119	35	0.04	0.19	-0.13	-1.97e-04	2.94e-05	6.29e-05
119	36	0.14	-0.15	-0.11	1.63e-04	7.16e-05	-6.80e-05
119	37	-0.12	0.20	-0.13	-1.91e-04	-4.58e-05	1.57e-04
119	38	-0.02	-0.14	-0.11	1.69e-04	-3.60e-06	2.56e-05
119	39	0.10	0.18	-0.13	-1.87e-04	5.75e-05	3.97e-05
119	40	0.04	-0.13	-0.11	1.53e-04	2.70e-05	-8.90e-06
119	41	-0.01	0.18	-0.13	-1.81e-04	-1.17e-06	9.74e-05
119	42	-0.08	-0.13	-0.11	1.59e-04	-3.17e-05	4.89e-05
119	43	0.12	0.18	-0.13	-1.87e-04	6.58e-05	2.17e-05
119	44	0.06	-0.14	-0.11	1.53e-04	3.53e-05	-2.68e-05
119	45	-0.03	0.19	-0.13	-1.81e-04	-9.45e-06	1.15e-04
119	46	-0.10	-0.12	-0.11	1.59e-04	-3.99e-05	6.68e-05
119	47	-0.34	0.05	-0.12	-4.06e-06	-1.65e-04	2.49e-04
119	48	0.37	-1.39e-04	-0.12	-2.38e-05	1.91e-04	-1.61e-04
119	49	0.03	-0.23	-0.10	2.65e-04	7.36e-06	0.0
119	50	-7.71e-03	0.29	-0.13	-2.93e-04	1.85e-05	8.86e-05
120	1	0.01	0.03	-0.15	3.98e-06	1.26e-04	1.54e-04
120	2	0.01	0.03	-0.15	1.45e-06	1.30e-04	1.54e-04
120	3	0.02	0.04	-0.18	-1.27e-05	1.40e-04	1.80e-04
120	4	0.02	0.04	-0.18	-1.52e-05	1.44e-04	1.81e-04
120	5	0.01	0.02	-0.11	-2.64e-06	9.07e-05	1.08e-04
120	6	0.01	0.02	-0.11	-5.17e-06	9.49e-05	1.09e-04
120	7	0.01	0.03	-0.14	-1.93e-05	1.05e-04	1.35e-04
120	8	0.01	0.03	-0.14	-2.18e-05	1.09e-04	1.36e-04
120	9	0.01	0.03	-0.15	-1.08e-06	1.34e-04	1.55e-04
120	10	0.02	0.04	-0.17	-7.69e-06	1.36e-04	1.72e-04
120	11	0.02	0.04	-0.17	-1.28e-05	1.44e-04	1.74e-04
120	12	0.01	0.02	-0.11	-7.70e-06	9.91e-05	1.10e-04
120	13	0.01	0.03	-0.13	-1.43e-05	1.00e-04	1.27e-04
120	14	0.01	0.03	-0.13	-1.94e-05	1.09e-04	1.29e-04
120	15	0.19	0.08	-0.13	-7.38e-05	1.96e-04	4.90e-05
120	16	0.22	-0.01	-0.12	2.40e-05	2.10e-04	9.34e-06
120	17	-0.19	0.06	-0.12	-4.26e-05	-1.71e-05	2.28e-04
120	18	-0.16	-0.03	-0.11	5.52e-05	-3.33e-06	1.89e-04
120	19	0.21	0.08	-0.13	-8.06e-05	2.09e-04	3.63e-05
120	20	0.19	-0.02	-0.12	3.07e-05	1.97e-04	2.20e-05
120	21	-0.17	0.07	-0.12	-4.93e-05	-4.33e-06	2.16e-04
120	22	-0.19	-0.03	-0.11	6.19e-05	-1.61e-05	2.01e-04
120	23	0.25	0.09	-0.13	-8.95e-05	2.27e-04	-5.57e-06
120	24	0.28	-2.37e-03	-0.13	8.36e-06	2.41e-04	-4.52e-05
120	25	-0.26	0.05	-0.12	-2.70e-05	-4.83e-05	2.83e-04
120	26	-0.23	-0.04	-0.11	7.08e-05	-3.46e-05	2.43e-04
120	27	0.28	0.09	-0.13	-9.62e-05	2.40e-04	-1.82e-05
120	28	0.26	-7.89e-03	-0.12	1.51e-05	2.28e-04	-3.25e-05
120	29	-0.23	0.06	-0.12	-3.37e-05	-3.56e-05	2.70e-04
120	30	-0.25	-0.04	-0.11	7.75e-05	-4.73e-05	2.56e-04
120	31	0.02	0.18	-0.13	-1.77e-04	1.05e-04	1.58e-04
120	32	0.12	-0.12	-0.11	1.49e-04	1.51e-04	2.59e-05
120	33	-0.10	0.17	-0.13	-1.68e-04	4.14e-05	2.12e-04
120	34	4.98e-03	-0.13	-0.11	1.58e-04	8.72e-05	7.98e-05
120	35	0.04	0.18	-0.13	-1.82e-04	1.15e-04	1.42e-04

120	36	0.14	-0.12	-0.12	1.44e-04	1.61e-04	9.57e-06
120	37	-0.11	0.17	-0.13	-1.63e-04	3.21e-05	2.28e-04
120	38	-0.01	-0.13	-0.11	1.63e-04	7.79e-05	9.61e-05
120	39	0.10	0.20	-0.13	-1.99e-04	1.48e-04	1.16e-04
120	40	0.04	-0.14	-0.11	1.71e-04	1.09e-04	6.82e-05
120	41	-0.01	0.19	-0.13	-1.90e-04	8.39e-05	1.70e-04
120	42	-0.08	-0.15	-0.11	1.81e-04	4.48e-05	1.22e-04
120	43	0.12	0.20	-0.13	-2.04e-04	1.57e-04	9.94e-05
120	44	0.06	-0.14	-0.11	1.67e-04	1.18e-04	5.18e-05
120	45	-0.03	0.19	-0.13	-1.85e-04	7.45e-05	1.86e-04
120	46	-0.10	-0.15	-0.11	1.85e-04	3.54e-05	1.38e-04
120	47	-0.34	4.97e-03	-0.11	2.93e-05	-9.84e-05	3.09e-04
120	48	0.37	0.05	-0.13	-4.79e-05	2.91e-04	-7.10e-05
120	49	0.03	-0.23	-0.11	2.67e-04	8.79e-05	6.37e-05
120	50	-7.76e-03	0.28	-0.14	-2.86e-04	1.05e-04	1.74e-04
121	1	-1.12e-03	-1.41e-03	-0.10	3.52e-04	-1.02e-04	1.14e-05
121	2	-1.13e-03	-1.43e-03	-0.10	3.55e-04	-1.03e-04	1.14e-05
121	3	-1.33e-03	-1.80e-03	-0.11	4.60e-04	-1.16e-04	1.31e-05
121	4	-1.34e-03	-1.81e-03	-0.12	4.63e-04	-1.17e-04	1.31e-05
121	5	-8.26e-04	-1.02e-03	-0.07	2.56e-04	-7.52e-05	8.48e-06
121	6	-8.36e-04	-1.04e-03	-0.07	2.60e-04	-7.66e-05	8.51e-06
121	7	-1.04e-03	-1.41e-03	-0.09	3.64e-04	-8.94e-05	1.02e-05
121	8	-1.05e-03	-1.42e-03	-0.09	3.67e-04	-9.08e-05	1.03e-05
121	9	-1.14e-03	-1.44e-03	-0.10	3.59e-04	-1.04e-04	1.14e-05
121	10	-1.27e-03	-1.68e-03	-0.11	4.28e-04	-1.12e-04	1.26e-05
121	11	-1.29e-03	-1.71e-03	-0.11	4.34e-04	-1.14e-04	1.26e-05
121	12	-8.45e-04	-1.05e-03	-0.07	2.63e-04	-7.80e-05	8.54e-06
121	13	-9.74e-04	-1.29e-03	-0.08	3.32e-04	-8.52e-05	9.71e-06
121	14	-9.93e-04	-1.32e-03	-0.09	3.38e-04	-8.80e-05	9.77e-06
121	15	9.64e-03	-2.66e-03	-0.08	2.81e-04	-4.20e-05	1.78e-05
121	16	0.01	-4.94e-03	-0.08	3.33e-04	-3.14e-05	3.47e-05
121	17	-0.02	2.59e-03	-0.08	2.66e-04	-1.30e-04	-1.63e-05
121	18	-0.01	3.07e-04	-0.08	3.18e-04	-1.20e-04	0.0
121	19	0.01	-2.95e-03	-0.08	2.83e-04	-3.96e-05	1.73e-05
121	20	0.01	-4.64e-03	-0.08	3.31e-04	-3.38e-05	3.51e-05
121	21	-0.01	2.29e-03	-0.08	2.68e-04	-1.28e-04	-1.67e-05
121	22	-0.01	6.02e-04	-0.08	3.16e-04	-1.22e-04	1.03e-06
121	23	0.01	-4.02e-03	-0.08	2.89e-04	-2.56e-05	2.18e-05
121	24	0.02	-6.31e-03	-0.08	3.41e-04	-1.50e-05	3.87e-05
121	25	-0.02	3.96e-03	-0.08	2.58e-04	-1.47e-04	-2.03e-05
121	26	-0.02	1.67e-03	-0.08	3.10e-04	-1.36e-04	-3.45e-06
121	27	0.02	-4.32e-03	-0.08	2.91e-04	-2.32e-05	2.14e-05
121	28	0.02	-6.01e-03	-0.08	3.39e-04	-1.74e-05	3.91e-05
121	29	-0.02	3.66e-03	-0.08	2.60e-04	-1.44e-04	-2.08e-05
121	30	-0.02	1.97e-03	-0.08	3.08e-04	-1.39e-04	-3.01e-06
121	31	-3.46e-03	1.84e-03	-0.08	2.15e-04	-8.53e-05	-1.38e-05
121	32	9.10e-03	-5.76e-03	-0.07	3.88e-04	-5.00e-05	4.24e-05
121	33	-0.01	3.41e-03	-0.08	2.11e-04	-1.12e-04	-2.41e-05
121	34	1.63e-03	-4.19e-03	-0.08	3.84e-04	-7.66e-05	3.22e-05
121	35	-1.85e-03	1.43e-03	-0.08	2.18e-04	-8.03e-05	-1.26e-05
121	36	0.01	-6.17e-03	-0.07	3.91e-04	-4.51e-05	4.36e-05
121	37	-0.01	3.82e-03	-0.08	2.08e-04	-1.17e-04	-2.53e-05
121	38	3.17e-05	-3.78e-03	-0.08	3.82e-04	-8.15e-05	3.10e-05
121	39	-3.45e-04	8.59e-04	-0.08	2.22e-04	-7.72e-05	-1.53e-05
121	40	5.99e-03	-4.78e-03	-0.08	3.82e-04	-5.81e-05	4.39e-05
121	41	-7.81e-03	2.43e-03	-0.08	2.17e-04	-1.04e-04	-2.55e-05
121	42	-1.48e-03	-3.21e-03	-0.08	3.77e-04	-8.46e-05	3.37e-05
121	43	1.26e-03	4.49e-04	-0.08	2.24e-04	-7.23e-05	-1.41e-05
121	44	7.59e-03	-5.19e-03	-0.07	3.84e-04	-5.32e-05	4.51e-05
121	45	-9.41e-03	2.84e-03	-0.08	2.15e-04	-1.09e-04	-2.67e-05
121	46	-3.08e-03	-2.80e-03	-0.08	3.75e-04	-8.95e-05	3.25e-05
121	47	-0.03	4.15e-03	-0.08	2.81e-04	-1.65e-04	-2.08e-05
121	48	0.02	-6.50e-03	-0.08	3.18e-04	2.68e-06	3.92e-05
121	49	5.22e-03	-6.38e-03	-0.07	4.33e-04	-6.43e-05	5.51e-05
121	50	-7.05e-03	4.03e-03	-0.08	1.67e-04	-9.76e-05	-3.67e-05
122	1	-8.40e-04	-1.61e-03	-0.10	3.59e-04	-8.06e-05	3.32e-06
122	2	-8.54e-04	-1.63e-03	-0.10	3.63e-04	-8.19e-05	3.37e-06
122	3	-8.31e-04	-2.05e-03	-0.12	4.71e-04	-9.10e-05	5.33e-06
122	4	-8.45e-04	-2.06e-03	-0.12	4.74e-04	-9.22e-05	5.38e-06
122	5	-6.39e-04	-1.17e-03	-0.07	2.62e-04	-5.97e-05	2.26e-06
122	6	-6.52e-04	-1.19e-03	-0.07	2.65e-04	-6.10e-05	2.31e-06
122	7	-6.30e-04	-1.61e-03	-0.09	3.73e-04	-7.01e-05	4.27e-06
122	8	-6.43e-04	-1.62e-03	-0.09	3.76e-04	-7.14e-05	4.32e-06
122	9	-8.67e-04	-1.64e-03	-0.10	3.66e-04	-8.31e-05	3.42e-06
122	10	-8.34e-04	-1.92e-03	-0.11	4.37e-04	-8.79e-05	4.73e-06
122	11	-8.61e-04	-1.95e-03	-0.11	4.44e-04	-9.04e-05	4.82e-06
122	12	-6.65e-04	-1.20e-03	-0.08	2.68e-04	-6.22e-05	2.36e-06

122	13	-6.32e-04	-1.48e-03	-0.09	3.40e-04	-6.70e-05	3.67e-06
122	14	-6.59e-04	-1.51e-03	-0.09	3.46e-04	-6.95e-05	3.77e-06
122	15	9.10e-03	-9.91e-04	-0.08	2.87e-04	-2.94e-05	2.01e-05
122	16	0.01	-1.83e-03	-0.08	3.32e-04	-2.16e-05	4.30e-05
122	17	-0.01	-8.59e-04	-0.08	2.81e-04	-1.06e-04	-3.68e-05
122	18	-0.01	-1.70e-03	-0.08	3.25e-04	-9.83e-05	-1.40e-05
122	19	9.80e-03	-9.35e-04	-0.08	2.85e-04	-2.77e-05	1.87e-05
122	20	0.01	-1.89e-03	-0.08	3.34e-04	-2.33e-05	4.43e-05
122	21	-0.01	-8.02e-04	-0.08	2.78e-04	-1.04e-04	-3.82e-05
122	22	-0.01	-1.76e-03	-0.08	3.28e-04	-1.00e-04	-1.26e-05
122	23	0.01	-7.89e-04	-0.08	2.79e-04	-1.59e-05	2.54e-05
122	24	0.02	-1.63e-03	-0.08	3.23e-04	-8.11e-06	4.82e-05
122	25	-0.02	-1.06e-03	-0.08	2.89e-04	-1.20e-04	-4.21e-05
122	26	-0.02	-1.90e-03	-0.08	3.34e-04	-1.12e-04	-1.93e-05
122	27	0.01	-7.32e-04	-0.08	2.76e-04	-1.42e-05	2.40e-05
122	28	0.02	-1.69e-03	-0.08	3.26e-04	-9.84e-06	4.96e-05
122	29	-0.02	-1.00e-03	-0.08	2.86e-04	-1.18e-04	-4.35e-05
122	30	-0.02	-1.96e-03	-0.08	3.36e-04	-1.14e-04	-1.79e-05
122	31	-1.70e-03	3.71e-05	-0.08	2.33e-04	-6.54e-05	-2.65e-05
122	32	7.06e-03	-2.77e-03	-0.08	3.81e-04	-3.93e-05	4.97e-05
122	33	-8.33e-03	7.68e-05	-0.08	2.31e-04	-8.84e-05	-4.36e-05
122	34	4.27e-04	-2.73e-03	-0.08	3.79e-04	-6.23e-05	3.26e-05
122	35	-2.85e-04	9.78e-05	-0.08	2.30e-04	-6.14e-05	-2.49e-05
122	36	8.47e-03	-2.71e-03	-0.08	3.79e-04	-3.53e-05	5.13e-05
122	37	-9.74e-03	1.61e-05	-0.08	2.34e-04	-9.25e-05	-4.51e-05
122	38	-9.85e-04	-2.79e-03	-0.08	3.82e-04	-6.64e-05	3.10e-05
122	39	6.13e-04	2.26e-04	-0.08	2.24e-04	-5.96e-05	-3.10e-05
122	40	4.75e-03	-2.96e-03	-0.08	3.90e-04	-4.51e-05	5.42e-05
122	41	-6.02e-03	2.66e-04	-0.08	2.22e-04	-8.27e-05	-4.81e-05
122	42	-1.88e-03	-2.92e-03	-0.08	3.88e-04	-6.81e-05	3.72e-05
122	43	2.02e-03	2.87e-04	-0.09	2.22e-04	-5.56e-05	-2.95e-05
122	44	6.16e-03	-2.90e-03	-0.08	3.88e-04	-4.11e-05	5.58e-05
122	45	-7.43e-03	2.05e-04	-0.08	2.25e-04	-8.67e-05	-4.97e-05
122	46	-3.30e-03	-2.98e-03	-0.08	3.91e-04	-7.22e-05	3.56e-05
122	47	-0.02	-1.19e-03	-0.08	3.00e-04	-1.36e-04	-4.56e-05
122	48	0.02	-1.50e-03	-0.08	3.12e-04	7.94e-06	5.17e-05
122	49	2.44e-03	-3.73e-03	-0.07	4.31e-04	-5.26e-05	6.71e-05
122	50	-3.71e-03	1.03e-03	-0.09	1.81e-04	-7.52e-05	-6.09e-05
123	1	6.04e-03	0.01	-0.09	-2.34e-04	3.39e-05	-3.65e-05
123	2	6.05e-03	0.01	-0.09	-2.35e-04	3.42e-05	-3.62e-05
123	3	8.40e-03	0.01	-0.11	-2.95e-04	4.65e-05	-5.52e-05
123	4	8.42e-03	0.01	-0.11	-2.95e-04	4.68e-05	-5.49e-05
123	5	4.34e-03	7.72e-03	-0.07	-1.73e-04	2.43e-05	-2.65e-05
123	6	4.35e-03	7.76e-03	-0.07	-1.74e-04	2.46e-05	-2.62e-05
123	7	6.71e-03	0.01	-0.08	-2.34e-04	3.69e-05	-4.53e-05
123	8	6.72e-03	0.01	-0.08	-2.34e-04	3.72e-05	-4.50e-05
123	9	6.06e-03	0.01	-0.10	-2.36e-04	3.45e-05	-3.59e-05
123	10	7.69e-03	0.01	-0.10	-2.77e-04	4.28e-05	-4.96e-05
123	11	7.72e-03	0.01	-0.10	-2.78e-04	4.33e-05	-4.90e-05
123	12	4.37e-03	7.79e-03	-0.07	-1.75e-04	2.49e-05	-2.59e-05
123	13	6.00e-03	9.35e-03	-0.08	-2.16e-04	3.31e-05	-3.96e-05
123	14	6.03e-03	9.41e-03	-0.08	-2.17e-04	3.37e-05	-3.91e-05
123	15	0.11	0.03	-0.09	-2.66e-04	3.04e-04	-1.08e-05
123	16	0.12	-0.04	-0.08	-1.62e-04	3.32e-04	-2.58e-05
123	17	-0.11	0.06	-0.07	-2.33e-04	-2.73e-04	-4.23e-05
123	18	-0.10	-8.33e-03	-0.06	-1.29e-04	-2.45e-04	-5.73e-05
123	19	0.11	0.02	-0.09	-2.55e-04	3.28e-04	-1.50e-05
123	20	0.12	-0.03	-0.08	-1.73e-04	3.07e-04	-2.16e-05
123	21	-0.11	0.05	-0.07	-2.22e-04	-2.49e-04	-4.65e-05
123	22	-0.10	-8.23e-04	-0.06	-1.39e-04	-2.69e-04	-5.31e-05
123	23	0.14	1.80e-03	-0.09	-2.80e-04	3.59e-04	-8.13e-06
123	24	0.15	-0.06	-0.08	-1.76e-04	3.87e-04	-2.31e-05
123	25	-0.14	0.08	-0.07	-2.19e-04	-3.28e-04	-4.49e-05
123	26	-0.13	0.02	-0.06	-1.15e-04	-3.00e-04	-5.99e-05
123	27	0.14	-5.70e-03	-0.09	-2.70e-04	3.83e-04	-1.23e-05
123	28	0.15	-0.06	-0.08	-1.87e-04	3.62e-04	-1.89e-05
123	29	-0.14	0.07	-0.07	-2.08e-04	-3.04e-04	-4.91e-05
123	30	-0.13	0.02	-0.06	-1.25e-04	-3.24e-04	-5.57e-05
123	31	0.02	0.11	-0.09	-3.76e-04	6.96e-05	-4.31e-06
123	32	0.06	-0.11	-0.07	-2.93e-05	1.62e-04	-5.43e-05
123	33	-0.05	0.12	-0.08	-3.66e-04	-1.03e-04	-1.38e-05
123	34	-7.20e-03	-0.10	-0.06	-1.93e-05	-1.09e-05	-6.37e-05
123	35	0.03	0.11	-0.09	-3.80e-04	8.61e-05	-3.52e-06
123	36	0.07	-0.11	-0.07	-3.36e-05	1.79e-04	-5.35e-05
123	37	-0.06	0.13	-0.08	-3.61e-04	-1.20e-04	-1.46e-05
123	38	-0.02	-0.09	-0.06	-1.50e-05	-2.74e-05	-6.45e-05
123	39	0.02	0.09	-0.09	-3.40e-04	1.50e-04	-1.83e-05

123	40	0.05	-0.08	-0.07	-6.49e-05	8.13e-05	-4.03e-05
123	41	-0.04	0.10	-0.08	-3.30e-04	-2.26e-05	-2.77e-05
123	42	-0.01	-0.07	-0.07	-5.48e-05	-9.17e-05	-4.98e-05
123	43	0.03	0.08	-0.09	-3.44e-04	1.67e-04	-1.75e-05
123	44	0.06	-0.09	-0.07	-6.91e-05	9.78e-05	-3.95e-05
123	45	-0.05	0.11	-0.08	-3.26e-04	-3.91e-05	-2.85e-05
123	46	-0.02	-0.06	-0.07	-5.06e-05	-1.08e-04	-5.06e-05
123	47	-0.19	0.05	-0.06	-1.69e-04	-4.69e-04	-5.40e-05
123	48	0.21	-0.04	-0.09	-2.26e-04	5.28e-04	-1.40e-05
123	49	0.02	-0.15	-0.06	5.08e-05	1.78e-05	-4.67e-05
123	50	-4.69e-03	0.16	-0.09	-4.46e-04	4.10e-05	-2.14e-05
124	1	5.28e-03	0.01	-0.06	-4.84e-05	1.68e-05	4.46e-05
124	2	5.34e-03	0.01	-0.06	-4.89e-05	1.70e-05	4.46e-05
124	3	7.50e-03	0.01	-0.07	-5.58e-05	2.50e-05	5.25e-05
124	4	7.56e-03	0.01	-0.07	-5.63e-05	2.52e-05	5.25e-05
124	5	3.79e-03	8.03e-03	-0.05	-3.51e-05	1.16e-05	3.31e-05
124	6	3.85e-03	8.07e-03	-0.05	-3.56e-05	1.18e-05	3.31e-05
124	7	6.00e-03	0.01	-0.05	-4.25e-05	1.97e-05	4.10e-05
124	8	6.06e-03	0.01	-0.05	-4.30e-05	1.99e-05	4.10e-05
124	9	5.40e-03	0.01	-0.06	-4.94e-05	1.72e-05	4.46e-05
124	10	6.83e-03	0.01	-0.07	-5.36e-05	2.25e-05	5.02e-05
124	11	6.95e-03	0.01	-0.07	-5.46e-05	2.29e-05	5.02e-05
124	12	3.91e-03	8.12e-03	-0.05	-3.61e-05	1.20e-05	3.31e-05
124	13	5.34e-03	9.50e-03	-0.05	-4.03e-05	1.73e-05	3.86e-05
124	14	5.46e-03	9.60e-03	-0.05	-4.13e-05	1.77e-05	3.86e-05
124	15	0.11	0.03	-0.05	-1.51e-04	2.91e-04	6.85e-05
124	16	0.13	-0.04	-0.05	3.00e-05	3.35e-04	8.29e-05
124	17	-0.12	0.06	-0.05	-1.06e-04	-3.06e-04	-1.03e-05
124	18	-0.10	-8.44e-03	-0.04	7.51e-05	-2.62e-04	4.06e-06
124	19	0.13	0.02	-0.05	-1.32e-04	3.28e-04	6.48e-05
124	20	0.12	-0.03	-0.05	1.07e-05	2.99e-04	8.65e-05
124	21	-0.11	0.05	-0.05	-8.68e-05	-2.69e-04	-1.40e-05
124	22	-0.12	-8.51e-04	-0.04	5.58e-05	-2.98e-04	7.71e-06
124	23	0.16	1.95e-03	-0.05	-4.85e-05	3.89e-04	6.99e-05
124	24	0.18	-0.06	-0.05	1.33e-04	4.33e-04	8.43e-05
124	25	-0.17	0.08	-0.05	-2.09e-04	-4.04e-04	-1.18e-05
124	26	-0.15	0.02	-0.04	-2.76e-05	-3.60e-04	2.58e-06
124	27	0.17	-5.64e-03	-0.05	-2.92e-05	4.26e-04	6.63e-05
124	28	0.16	-0.06	-0.05	1.13e-04	3.97e-04	8.80e-05
124	29	-0.15	0.07	-0.05	-1.90e-04	-3.67e-04	-1.55e-05
124	30	-0.16	0.02	-0.04	-4.69e-05	-3.96e-04	6.24e-06
124	31	8.20e-03	0.12	-0.05	-3.47e-04	3.12e-05	2.41e-05
124	32	0.07	-0.11	-0.05	2.57e-04	1.78e-04	7.21e-05
124	33	-0.06	0.12	-0.05	-3.33e-04	-1.48e-04	0.0
124	34	1.15e-03	-0.10	-0.04	2.71e-04	-1.48e-06	4.84e-05
124	35	0.02	0.11	-0.05	-3.16e-04	6.05e-05	2.45e-05
124	36	0.09	-0.11	-0.05	2.88e-04	2.07e-04	7.25e-05
124	37	-0.08	0.13	-0.05	-3.64e-04	-1.77e-04	0.0
124	38	-0.01	-0.09	-0.04	2.40e-04	-3.08e-05	4.80e-05
124	39	0.06	0.09	-0.05	-2.82e-04	1.53e-04	1.19e-05
124	40	0.02	-0.08	-0.05	1.93e-04	5.56e-05	8.43e-05
124	41	-0.01	0.10	-0.05	-2.69e-04	-2.59e-05	-1.17e-05
124	42	-0.05	-0.07	-0.05	2.06e-04	-1.24e-04	6.06e-05
124	43	0.07	0.08	-0.05	-2.52e-04	1.83e-04	1.23e-05
124	44	0.03	-0.09	-0.05	2.24e-04	8.49e-05	8.47e-05
124	45	-0.02	0.11	-0.05	-3.00e-04	-5.52e-05	-1.22e-05
124	46	-0.06	-0.06	-0.04	1.76e-04	-1.53e-04	6.02e-05
124	47	-0.22	0.06	-0.04	-1.22e-04	-5.39e-04	-2.59e-05
124	48	0.23	-0.04	-0.05	4.58e-05	5.69e-04	9.84e-05
124	49	0.02	-0.15	-0.04	3.93e-04	-7.82e-06	8.34e-05
124	50	-8.12e-03	0.17	-0.05	-4.69e-04	3.75e-05	-1.09e-05
125	1	-6.06e-04	5.21e-04	-0.05	1.80e-05	2.75e-05	-2.92e-05
125	2	-6.20e-04	5.03e-04	-0.05	1.81e-05	2.73e-05	-2.92e-05
125	3	-3.42e-04	8.81e-04	-0.06	2.42e-05	3.16e-05	-3.74e-05
125	4	-3.57e-04	8.63e-04	-0.06	2.43e-05	3.14e-05	-3.73e-05
125	5	-4.95e-04	3.70e-04	-0.04	1.34e-05	2.06e-05	-2.13e-05
125	6	-5.09e-04	3.52e-04	-0.04	1.34e-05	2.05e-05	-2.12e-05
125	7	-2.32e-04	7.29e-04	-0.05	1.96e-05	2.47e-05	-2.94e-05
125	8	-2.46e-04	7.11e-04	-0.05	1.97e-05	2.46e-05	-2.94e-05
125	9	-6.34e-04	4.86e-04	-0.06	1.81e-05	2.72e-05	-2.91e-05
125	10	-4.21e-04	7.73e-04	-0.06	2.24e-05	3.03e-05	-3.49e-05
125	11	-4.50e-04	7.37e-04	-0.06	2.25e-05	3.01e-05	-3.49e-05
125	12	-5.24e-04	3.34e-04	-0.04	1.35e-05	2.04e-05	-2.12e-05
125	13	-3.11e-04	6.21e-04	-0.04	1.77e-05	2.35e-05	-2.70e-05
125	14	-3.39e-04	5.86e-04	-0.05	1.79e-05	2.32e-05	-2.69e-05
125	15	0.01	7.16e-03	-0.04	-4.33e-05	1.94e-04	-4.47e-06
125	16	0.02	4.79e-03	-0.04	3.31e-05	2.25e-04	-1.58e-05

125	17	-0.02	-3.77e-03	-0.05	-1.37e-06	-1.81e-04	-3.33e-05
125	18	-0.01	-6.13e-03	-0.04	7.50e-05	-1.50e-04	-4.45e-05
125	19	0.02	7.86e-03	-0.04	-5.69e-05	2.19e-04	-6.40e-06
125	20	0.01	4.09e-03	-0.04	4.67e-05	2.01e-04	-1.38e-05
125	21	-0.01	-3.06e-03	-0.05	-1.49e-05	-1.56e-04	-3.52e-05
125	22	-0.02	-6.84e-03	-0.04	8.86e-05	-1.74e-04	-4.26e-05
125	23	0.02	0.01	-0.04	-7.44e-05	2.61e-04	-5.65e-06
125	24	0.02	7.88e-03	-0.04	2.05e-06	2.92e-04	-1.69e-05
125	25	-0.02	-6.86e-03	-0.05	2.97e-05	-2.47e-04	-3.21e-05
125	26	-0.02	-9.22e-03	-0.05	1.06e-04	-2.16e-04	-4.34e-05
125	27	0.02	0.01	-0.04	-8.79e-05	2.85e-04	-7.58e-06
125	28	0.02	7.18e-03	-0.04	1.56e-05	2.67e-04	-1.50e-05
125	29	-0.02	-6.15e-03	-0.05	1.61e-05	-2.23e-04	-3.40e-05
125	30	-0.02	-9.93e-03	-0.05	1.20e-04	-2.41e-04	-4.14e-05
125	31	-9.26e-04	6.09e-03	-0.04	-1.18e-04	2.66e-05	-1.38e-06
125	32	9.16e-03	-1.79e-03	-0.04	1.37e-04	1.30e-04	-3.90e-05
125	33	-9.93e-03	2.82e-03	-0.05	-1.05e-04	-8.59e-05	-1.00e-05
125	34	1.47e-04	-5.07e-03	-0.04	1.50e-04	1.79e-05	-4.76e-05
125	35	9.35e-04	7.02e-03	-0.04	-1.27e-04	4.65e-05	-1.73e-06
125	36	0.01	-8.61e-04	-0.04	1.28e-04	1.50e-04	-3.94e-05
125	37	-0.01	1.89e-03	-0.05	-9.59e-05	-1.06e-04	-9.66e-06
125	38	-1.71e-03	-5.99e-03	-0.04	1.59e-04	-2.00e-06	-4.73e-05
125	39	6.84e-03	8.44e-03	-0.05	-1.63e-04	1.09e-04	-7.81e-06
125	40	1.39e-03	-4.14e-03	-0.04	1.82e-04	4.83e-05	-3.26e-05
125	41	-2.17e-03	5.17e-03	-0.05	-1.50e-04	-3.79e-06	-1.64e-05
125	42	-7.62e-03	-7.42e-03	-0.04	1.95e-04	-6.42e-05	-4.12e-05
125	43	8.70e-03	9.37e-03	-0.04	-1.72e-04	1.29e-04	-8.16e-06
125	44	3.25e-03	-3.21e-03	-0.04	1.73e-04	6.82e-05	-3.29e-05
125	45	-4.03e-03	4.24e-03	-0.05	-1.41e-04	-2.37e-05	-1.61e-05
125	46	-9.48e-03	-8.34e-03	-0.04	2.04e-04	-8.41e-05	-4.09e-05
125	47	-0.03	-0.01	-0.05	7.59e-05	-3.29e-04	-4.55e-05
125	48	0.03	0.01	-0.04	-4.41e-05	3.74e-04	-3.50e-06
125	49	2.11e-03	-6.96e-03	-0.04	2.51e-04	4.70e-05	-4.95e-05
125	50	-2.89e-03	7.99e-03	-0.05	-2.20e-04	-2.47e-06	0.0
126	1	-6.63e-06	9.91e-05	-0.04	1.46e-05	-4.91e-05	0.0
126	2	-8.44e-06	9.53e-05	-0.04	1.52e-05	-4.97e-05	0.0
126	3	1.14e-05	1.54e-04	-0.05	4.12e-06	-5.82e-05	-4.63e-06
126	4	9.61e-06	1.51e-04	-0.05	4.72e-06	-5.88e-05	-4.60e-06
126	5	-4.38e-06	7.53e-05	-0.03	1.15e-05	-3.60e-05	0.0
126	6	-6.20e-06	7.15e-05	-0.03	1.21e-05	-3.66e-05	0.0
126	7	1.37e-05	1.31e-04	-0.04	1.08e-06	-4.52e-05	-4.23e-06
126	8	1.19e-05	1.27e-04	-0.04	1.68e-06	-4.58e-05	-4.20e-06
126	9	-1.03e-05	9.15e-05	-0.04	1.58e-05	-5.03e-05	0.0
126	10	6.00e-06	1.38e-04	-0.05	7.26e-06	-5.55e-05	-3.23e-06
126	11	2.38e-06	1.30e-04	-0.05	8.47e-06	-5.67e-05	-3.17e-06
126	12	-8.01e-06	6.77e-05	-0.03	1.28e-05	-3.72e-05	0.0
126	13	8.25e-06	1.14e-04	-0.04	4.22e-06	-4.24e-05	-2.83e-06
126	14	4.62e-06	1.06e-04	-0.04	5.42e-06	-4.36e-05	-2.77e-06
126	15	3.99e-03	-6.59e-04	-0.03	2.47e-06	-1.99e-05	0.0
126	16	5.00e-03	-1.98e-03	-0.03	1.82e-05	-1.69e-05	6.83e-06
126	17	-5.00e-03	2.17e-03	-0.03	-3.50e-06	-6.25e-05	-9.69e-06
126	18	-3.98e-03	8.54e-04	-0.03	1.22e-05	-5.94e-05	-2.17e-06
126	19	4.23e-03	-8.39e-04	-0.03	3.20e-06	-1.95e-05	-2.00e-06
126	20	4.75e-03	-1.80e-03	-0.03	1.75e-05	-1.74e-05	8.14e-06
126	21	-4.75e-03	1.99e-03	-0.03	-2.77e-06	-6.20e-05	-1.10e-05
126	22	-4.23e-03	1.03e-03	-0.03	1.15e-05	-5.99e-05	0.0
126	23	5.74e-03	-1.44e-03	-0.03	5.55e-06	-1.40e-05	-1.45e-06
126	24	6.76e-03	-2.76e-03	-0.03	2.13e-05	-1.10e-05	6.07e-06
126	25	-6.75e-03	2.96e-03	-0.03	-6.58e-06	-6.84e-05	-8.93e-06
126	26	-5.74e-03	1.64e-03	-0.03	9.17e-06	-6.54e-05	-1.41e-06
126	27	5.99e-03	-1.62e-03	-0.03	6.28e-06	-1.36e-05	-2.77e-06
126	28	6.51e-03	-2.58e-03	-0.03	2.06e-05	-1.14e-05	7.38e-06
126	29	-6.51e-03	2.78e-03	-0.03	-5.85e-06	-6.80e-05	-1.02e-05
126	30	-5.99e-03	1.82e-03	-0.03	8.44e-06	-6.58e-05	0.0
126	31	-3.38e-04	1.87e-03	-0.03	-1.80e-05	-3.83e-05	-1.26e-05
126	32	3.04e-03	-2.53e-03	-0.03	3.45e-05	-2.83e-05	1.25e-05
126	33	-3.03e-03	2.72e-03	-0.03	-1.98e-05	-5.11e-05	-1.53e-05
126	34	3.44e-04	-1.68e-03	-0.03	3.27e-05	-4.10e-05	9.76e-06
126	35	1.89e-04	1.64e-03	-0.03	-1.71e-05	-3.66e-05	-1.28e-05
126	36	3.57e-03	-2.76e-03	-0.03	3.54e-05	-2.65e-05	1.22e-05
126	37	-3.56e-03	2.96e-03	-0.03	-2.07e-05	-5.29e-05	-1.51e-05
126	38	-1.83e-04	-1.44e-03	-0.03	3.18e-05	-4.28e-05	9.98e-06
126	39	4.83e-04	1.27e-03	-0.03	-1.56e-05	-3.69e-05	-1.70e-05
126	40	2.22e-03	-1.93e-03	-0.03	3.21e-05	-2.97e-05	1.68e-05
126	41	-2.21e-03	2.12e-03	-0.03	-1.74e-05	-4.97e-05	-1.97e-05
126	42	-4.78e-04	-1.08e-03	-0.03	3.03e-05	-4.25e-05	1.41e-05
126	43	1.01e-03	1.04e-03	-0.03	-1.46e-05	-3.51e-05	-1.72e-05

126	44	2.74e-03	-2.16e-03	-0.03	3.30e-05	-2.79e-05	1.66e-05
126	45	-2.74e-03	2.36e-03	-0.03	-1.83e-05	-5.15e-05	-1.95e-05
126	46	-1.00e-03	-8.43e-04	-0.03	2.94e-05	-4.43e-05	1.44e-05
126	47	-8.56e-03	3.02e-03	-0.03	0.0	-7.80e-05	-7.27e-06
126	48	8.57e-03	-2.82e-03	-0.03	1.47e-05	-1.37e-06	4.40e-06
126	49	1.38e-03	-2.89e-03	-0.03	4.73e-05	-3.56e-05	2.18e-05
126	50	-1.38e-03	3.09e-03	-0.04	-3.26e-05	-4.38e-05	-2.47e-05
127	1	-8.32e-04	-2.04e-04	-0.04	1.46e-05	-4.99e-05	-2.68e-05
127	2	-8.39e-04	-2.09e-04	-0.04	1.52e-05	-5.05e-05	-2.69e-05
127	3	-9.65e-04	-2.06e-04	-0.05	3.65e-06	-5.88e-05	-3.58e-05
127	4	-9.72e-04	-2.10e-04	-0.05	4.28e-06	-5.94e-05	-3.59e-05
127	5	-6.18e-04	-1.52e-04	-0.03	1.16e-05	-3.67e-05	-1.95e-05
127	6	-6.25e-04	-1.56e-04	-0.03	1.22e-05	-3.73e-05	-1.96e-05
127	7	-7.51e-04	-1.53e-04	-0.04	0.0	-4.56e-05	-2.86e-05
127	8	-7.58e-04	-1.57e-04	-0.04	1.29e-06	-4.62e-05	-2.87e-05
127	9	-8.46e-04	-2.13e-04	-0.04	1.58e-05	-5.11e-05	-2.70e-05
127	10	-9.25e-04	-2.05e-04	-0.05	6.92e-06	-5.61e-05	-3.31e-05
127	11	-9.39e-04	-2.14e-04	-0.05	8.18e-06	-5.74e-05	-3.33e-05
127	12	-6.32e-04	-1.61e-04	-0.03	1.28e-05	-3.79e-05	-1.97e-05
127	13	-7.11e-04	-1.52e-04	-0.04	3.94e-06	-4.29e-05	-2.59e-05
127	14	-7.25e-04	-1.62e-04	-0.04	5.20e-06	-4.42e-05	-2.61e-05
127	15	2.63e-03	-7.78e-06	-0.03	1.83e-06	-2.28e-05	-1.87e-05
127	16	3.54e-03	-4.26e-04	-0.03	1.47e-05	-1.99e-05	-8.63e-06
127	17	-4.88e-03	1.22e-04	-0.03	0.0	-6.06e-05	-3.77e-05
127	18	-3.98e-03	-2.96e-04	-0.03	1.26e-05	-5.77e-05	-2.76e-05
127	19	2.84e-03	3.74e-05	-0.03	0.0	-2.25e-05	-2.02e-05
127	20	3.34e-03	-4.71e-04	-0.03	1.56e-05	-2.01e-05	-7.12e-06
127	21	-4.68e-03	1.67e-04	-0.03	-1.13e-06	-6.04e-05	-3.92e-05
127	22	-4.18e-03	-3.41e-04	-0.03	1.35e-05	-5.80e-05	-2.61e-05
127	23	4.07e-03	-2.57e-05	-0.03	-1.35e-06	-1.77e-05	-1.90e-05
127	24	4.98e-03	-4.44e-04	-0.03	1.15e-05	-1.48e-05	-8.90e-06
127	25	-6.32e-03	1.40e-04	-0.03	2.95e-06	-6.57e-05	-3.74e-05
127	26	-5.41e-03	-2.78e-04	-0.03	1.58e-05	-6.28e-05	-2.74e-05
127	27	4.27e-03	1.95e-05	-0.03	-2.25e-06	-1.75e-05	-2.05e-05
127	28	4.78e-03	-4.89e-04	-0.03	1.24e-05	-1.51e-05	-7.39e-06
127	29	-6.12e-03	1.85e-04	-0.03	2.05e-06	-6.54e-05	-3.89e-05
127	30	-5.62e-03	-3.23e-04	-0.03	1.67e-05	-6.30e-05	-2.59e-05
127	31	-1.06e-03	5.26e-04	-0.03	-1.38e-05	-3.94e-05	-3.71e-05
127	32	1.97e-03	-8.69e-04	-0.03	2.89e-05	-2.98e-05	-3.54e-06
127	33	-3.31e-03	5.65e-04	-0.03	-1.45e-05	-5.07e-05	-4.28e-05
127	34	-2.86e-04	-8.30e-04	-0.03	2.83e-05	-4.11e-05	-9.24e-06
127	35	-6.26e-04	5.20e-04	-0.03	-1.48e-05	-3.79e-05	-3.72e-05
127	36	2.40e-03	-8.74e-04	-0.03	2.79e-05	-2.83e-05	-3.62e-06
127	37	-3.74e-03	5.70e-04	-0.03	-1.35e-05	-5.22e-05	-4.27e-05
127	38	-7.17e-04	-8.24e-04	-0.03	2.92e-05	-4.27e-05	-9.16e-06
127	39	-3.83e-04	6.76e-04	-0.03	-1.69e-05	-3.86e-05	-4.21e-05
127	40	1.30e-03	-1.02e-03	-0.03	3.19e-05	-3.06e-05	1.47e-06
127	41	-2.64e-03	7.15e-04	-0.03	-1.75e-05	-4.99e-05	-4.78e-05
127	42	-9.60e-04	-9.80e-04	-0.03	3.13e-05	-4.20e-05	-4.23e-06
127	43	4.85e-05	6.71e-04	-0.04	-1.78e-05	-3.70e-05	-4.22e-05
127	44	1.73e-03	-1.02e-03	-0.03	3.10e-05	-2.91e-05	1.39e-06
127	45	-3.07e-03	7.21e-04	-0.03	-1.65e-05	-5.14e-05	-4.77e-05
127	46	-1.39e-03	-9.75e-04	-0.03	3.23e-05	-4.35e-05	-4.15e-06
127	47	-7.81e-03	-6.01e-05	-0.03	4.84e-06	-7.41e-05	-3.74e-05
127	48	6.46e-03	-2.44e-04	-0.03	9.59e-06	-6.37e-06	-8.97e-06
127	49	7.69e-04	-1.38e-03	-0.03	4.36e-05	-3.51e-05	7.34e-06
127	50	-2.11e-03	1.07e-03	-0.04	-2.91e-05	-4.54e-05	-5.37e-05
128	1	4.42e-04	-4.59e-05	-0.06	-3.35e-05	2.28e-04	1.81e-05
128	2	4.44e-04	-5.60e-05	-0.06	-3.32e-05	2.29e-04	1.81e-05
128	3	4.88e-04	9.38e-05	-0.07	-5.15e-05	2.65e-04	2.56e-05
128	4	4.90e-04	8.38e-05	-0.07	-5.12e-05	2.66e-04	2.56e-05
128	5	3.32e-04	-4.16e-05	-0.05	-2.43e-05	1.70e-04	1.31e-05
128	6	3.34e-04	-5.16e-05	-0.05	-2.40e-05	1.71e-04	1.31e-05
128	7	3.77e-04	9.82e-05	-0.05	-4.23e-05	2.06e-04	2.07e-05
128	8	3.79e-04	8.81e-05	-0.05	-4.20e-05	2.08e-04	2.07e-05
128	9	4.46e-04	-6.60e-05	-0.06	-3.29e-05	2.30e-04	1.81e-05
128	10	4.74e-04	5.19e-05	-0.07	-4.61e-05	2.54e-04	2.34e-05
128	11	4.78e-04	3.18e-05	-0.07	-4.55e-05	2.56e-04	2.34e-05
128	12	3.36e-04	-6.16e-05	-0.05	-2.37e-05	1.72e-04	1.31e-05
128	13	3.64e-04	5.62e-05	-0.05	-3.69e-05	1.95e-04	1.84e-05
128	14	3.68e-04	3.62e-05	-0.05	-3.63e-05	1.98e-04	1.84e-05
128	15	3.76e-03	3.16e-03	-0.05	-5.06e-05	2.82e-04	4.75e-05
128	16	4.64e-03	2.56e-03	-0.05	-3.89e-05	2.70e-04	3.23e-05
128	17	-3.94e-03	-2.53e-03	-0.05	-2.40e-05	9.86e-05	0.0
128	18	-3.06e-03	-3.13e-03	-0.05	-1.23e-05	8.67e-05	-1.52e-05
128	19	3.95e-03	3.32e-03	-0.05	-5.30e-05	2.81e-04	4.70e-05
128	20	4.45e-03	2.40e-03	-0.05	-3.65e-05	2.71e-04	3.28e-05

128	21	-3.75e-03	-2.37e-03	-0.05	-2.64e-05	9.76e-05	0.0
128	22	-3.25e-03	-3.29e-03	-0.05	-9.90e-06	8.78e-05	-1.47e-05
128	23	5.19e-03	4.54e-03	-0.05	-5.90e-05	3.09e-04	5.19e-05
128	24	6.06e-03	3.93e-03	-0.05	-4.73e-05	2.97e-04	3.66e-05
128	25	-5.36e-03	-3.91e-03	-0.05	-1.56e-05	7.18e-05	-4.37e-06
128	26	-4.49e-03	-4.51e-03	-0.05	-3.89e-06	5.99e-05	-1.96e-05
128	27	5.37e-03	4.70e-03	-0.05	-6.14e-05	3.08e-04	5.13e-05
128	28	5.88e-03	3.77e-03	-0.05	-4.49e-05	2.98e-04	3.72e-05
128	29	-5.18e-03	-3.75e-03	-0.05	-1.80e-05	7.07e-05	-4.91e-06
128	30	-4.67e-03	-4.67e-03	-0.05	-1.52e-06	6.09e-05	-1.91e-05
128	31	4.37e-05	1.88e-03	-0.05	-5.50e-05	2.32e-04	4.86e-05
128	32	2.97e-03	-1.45e-04	-0.05	-1.59e-05	1.92e-04	-2.10e-06
128	33	-2.27e-03	1.74e-04	-0.05	-4.70e-05	1.77e-04	3.44e-05
128	34	6.56e-04	-1.85e-03	-0.05	-7.90e-06	1.37e-04	-1.64e-05
128	35	4.71e-04	2.29e-03	-0.05	-5.75e-05	2.40e-04	4.99e-05
128	36	3.39e-03	2.69e-04	-0.05	-1.84e-05	2.00e-04	0.0
128	37	-2.69e-03	-2.40e-04	-0.05	-4.45e-05	1.69e-04	3.31e-05
128	38	2.29e-04	-2.27e-03	-0.05	-5.38e-06	1.29e-04	-1.77e-05
128	39	6.65e-04	2.41e-03	-0.05	-6.29e-05	2.28e-04	4.68e-05
128	40	2.34e-03	-6.77e-04	-0.05	-7.99e-06	1.96e-04	0.0
128	41	-1.64e-03	7.06e-04	-0.05	-5.49e-05	1.73e-04	3.26e-05
128	42	3.52e-05	-2.38e-03	-0.05	0.0	1.40e-04	-1.46e-05
128	43	1.09e-03	2.83e-03	-0.05	-6.54e-05	2.36e-04	4.81e-05
128	44	2.77e-03	-2.63e-04	-0.05	-1.05e-05	2.04e-04	0.0
128	45	-2.07e-03	2.92e-04	-0.05	-5.24e-05	1.65e-04	3.13e-05
128	46	-3.92e-04	-2.80e-03	-0.05	2.52e-06	1.32e-04	-1.59e-05
128	47	-6.91e-03	-5.67e-03	-0.05	-3.04e-06	1.81e-05	-2.46e-05
128	48	7.61e-03	5.69e-03	-0.05	-5.99e-05	3.51e-04	5.68e-05
128	49	1.74e-03	-1.43e-03	-0.04	4.86e-06	1.71e-04	-2.25e-05
128	50	-1.04e-03	1.46e-03	-0.05	-6.78e-05	1.98e-04	5.48e-05
129	1	4.60e-03	6.82e-03	-0.14	-6.97e-05	3.68e-05	4.21e-05
129	2	4.60e-03	6.83e-03	-0.14	-7.04e-05	3.62e-05	4.23e-05
129	3	6.72e-03	8.07e-03	-0.16	-4.28e-05	5.48e-05	6.67e-05
129	4	6.72e-03	8.08e-03	-0.17	-4.34e-05	5.42e-05	6.70e-05
129	5	3.30e-03	4.99e-03	-0.10	-5.28e-05	2.69e-05	3.06e-05
129	6	3.30e-03	5.00e-03	-0.11	-5.34e-05	2.63e-05	3.08e-05
129	7	5.42e-03	6.24e-03	-0.13	-2.59e-05	4.49e-05	5.52e-05
129	8	5.42e-03	6.24e-03	-0.13	-2.65e-05	4.43e-05	5.55e-05
129	9	4.60e-03	6.84e-03	-0.14	-7.10e-05	3.56e-05	4.26e-05
129	10	6.09e-03	7.69e-03	-0.16	-5.08e-05	4.94e-05	5.93e-05
129	11	6.08e-03	7.71e-03	-0.16	-5.22e-05	4.82e-05	5.98e-05
129	12	3.30e-03	5.01e-03	-0.11	-5.41e-05	2.57e-05	3.11e-05
129	13	4.78e-03	5.86e-03	-0.12	-3.39e-05	3.95e-05	4.79e-05
129	14	4.78e-03	5.88e-03	-0.12	-3.52e-05	3.83e-05	4.83e-05
129	15	0.11	0.03	-0.12	-1.22e-04	1.99e-04	-4.29e-06
129	16	0.13	-0.03	-0.11	2.66e-05	2.25e-04	7.46e-06
129	17	-0.13	0.04	-0.12	-1.11e-04	-1.56e-04	7.35e-05
129	18	-0.11	-0.02	-0.11	3.84e-05	-1.31e-04	8.52e-05
129	19	0.13	0.03	-0.12	-1.18e-04	2.21e-04	-7.68e-06
129	20	0.12	-0.03	-0.11	2.22e-05	2.03e-04	1.08e-05
129	21	-0.11	0.04	-0.12	-1.06e-04	-1.35e-04	7.01e-05
129	22	-0.12	-0.02	-0.11	3.39e-05	-1.52e-04	8.86e-05
129	23	0.16	0.02	-0.12	-9.38e-05	2.57e-04	-3.38e-05
129	24	0.18	-0.04	-0.11	5.52e-05	2.82e-04	-2.21e-05
129	25	-0.17	0.05	-0.12	-1.39e-04	-2.14e-04	1.03e-04
129	26	-0.15	-7.99e-03	-0.11	9.78e-06	-1.89e-04	1.15e-04
129	27	0.17	0.02	-0.12	-8.93e-05	2.78e-04	-3.72e-05
129	28	0.16	-0.04	-0.11	5.08e-05	2.61e-04	-1.87e-05
129	29	-0.15	0.05	-0.12	-1.35e-04	-1.93e-04	9.96e-05
129	30	-0.16	-5.71e-03	-0.11	5.33e-06	-2.10e-04	1.18e-04
129	31	7.54e-03	0.11	-0.12	-2.92e-04	4.50e-05	9.21e-06
129	32	0.07	-0.10	-0.10	2.05e-04	1.30e-04	4.84e-05
129	33	-0.06	0.11	-0.12	-2.89e-04	-6.17e-05	3.25e-05
129	34	7.64e-04	-0.09	-0.10	2.08e-04	2.33e-05	7.17e-05
129	35	0.02	0.10	-0.12	-2.84e-04	6.22e-05	0.0
129	36	0.09	-0.10	-0.10	2.13e-04	1.47e-04	3.95e-05
129	37	-0.08	0.11	-0.12	-2.97e-04	-7.90e-05	4.14e-05
129	38	-0.01	-0.09	-0.10	2.00e-04	6.01e-06	8.06e-05
129	39	0.06	0.10	-0.12	-2.77e-04	1.17e-04	-2.06e-06
129	40	0.02	-0.09	-0.10	1.90e-04	5.83e-05	5.97e-05
129	41	-0.01	0.10	-0.12	-2.74e-04	9.90e-06	2.13e-05
129	42	-0.05	-0.09	-0.10	1.93e-04	-4.83e-05	8.30e-05
129	43	0.07	0.09	-0.12	-2.69e-04	1.34e-04	-1.09e-05
129	44	0.03	-0.09	-0.10	1.98e-04	7.56e-05	5.08e-05
129	45	-0.02	0.11	-0.12	-2.82e-04	-7.37e-06	3.01e-05
129	46	-0.06	-0.08	-0.10	1.85e-04	-6.56e-05	9.18e-05
129	47	-0.22	0.03	-0.11	-6.34e-05	-2.95e-04	1.28e-04

129	48	0.23	-0.01	-0.12	-2.06e-05	3.63e-04	-4.69e-05
129	49	0.02	-0.15	-0.10	3.43e-04	2.17e-05	6.31e-05
129	50	-9.15e-03	0.16	-0.13	-4.27e-04	4.66e-05	1.78e-05
130	1	5.90e-03	6.06e-03	-0.14	-6.38e-05	1.20e-04	5.99e-05
130	2	5.88e-03	6.05e-03	-0.15	-6.45e-05	1.20e-04	6.02e-05
130	3	8.26e-03	7.12e-03	-0.17	-3.40e-05	1.54e-04	9.08e-05
130	4	8.24e-03	7.11e-03	-0.17	-3.47e-05	1.54e-04	9.11e-05
130	5	4.25e-03	4.44e-03	-0.11	-4.88e-05	8.82e-05	4.34e-05
130	6	4.23e-03	4.43e-03	-0.11	-4.95e-05	8.85e-05	4.38e-05
130	7	6.61e-03	5.50e-03	-0.13	-1.90e-05	1.22e-04	7.43e-05
130	8	6.59e-03	5.50e-03	-0.13	-1.97e-05	1.22e-04	7.47e-05
130	9	5.86e-03	6.05e-03	-0.15	-6.51e-05	1.21e-04	6.06e-05
130	10	7.55e-03	6.80e-03	-0.16	-4.30e-05	1.44e-04	8.15e-05
130	11	7.51e-03	6.79e-03	-0.16	-4.43e-05	1.44e-04	8.22e-05
130	12	4.21e-03	4.43e-03	-0.11	-5.01e-05	8.88e-05	4.41e-05
130	13	5.90e-03	5.18e-03	-0.12	-2.80e-05	1.12e-04	6.50e-05
130	14	5.86e-03	5.17e-03	-0.13	-2.92e-05	1.13e-04	6.58e-05
130	15	0.12	0.04	-0.13	-1.21e-04	2.77e-04	2.90e-05
130	16	0.14	-0.02	-0.12	1.32e-05	3.05e-04	1.52e-05
130	17	-0.12	0.03	-0.11	-8.70e-05	-1.01e-04	9.63e-05
130	18	-0.11	-0.03	-0.11	4.74e-05	-7.37e-05	8.26e-05
130	19	0.13	0.04	-0.13	-1.30e-04	3.00e-04	1.59e-05
130	20	0.12	-0.02	-0.12	2.21e-05	2.82e-04	2.83e-05
130	21	-0.11	0.03	-0.11	-9.59e-05	-7.82e-05	8.33e-05
130	22	-0.12	-0.03	-0.11	5.64e-05	-9.66e-05	9.57e-05
130	23	0.16	0.04	-0.13	-1.39e-04	3.38e-04	-1.41e-06
130	24	0.18	-0.01	-0.12	-4.58e-06	3.66e-04	-1.51e-05
130	25	-0.17	0.02	-0.11	-6.92e-05	-1.62e-04	1.27e-04
130	26	-0.15	-0.03	-0.10	6.52e-05	-1.35e-04	1.13e-04
130	27	0.17	0.05	-0.13	-1.48e-04	3.61e-04	-1.45e-05
130	28	0.16	-0.02	-0.12	4.34e-06	3.43e-04	-2.08e-06
130	29	-0.15	0.03	-0.11	-7.81e-05	-1.39e-04	1.14e-04
130	30	-0.16	-0.04	-0.10	7.41e-05	-1.58e-04	1.26e-04
130	31	8.16e-03	0.10	-0.13	-2.66e-04	1.13e-04	6.86e-05
130	32	0.07	-0.08	-0.11	1.82e-04	2.04e-04	2.28e-05
130	33	-0.06	0.09	-0.12	-2.56e-04	0.0	8.88e-05
130	34	2.23e-03	-0.09	-0.11	1.92e-04	9.08e-05	4.30e-05
130	35	0.02	0.10	-0.13	-2.71e-04	1.31e-04	5.95e-05
130	36	0.09	-0.08	-0.11	1.77e-04	2.23e-04	1.37e-05
130	37	-0.08	0.09	-0.12	-2.50e-04	-1.91e-05	9.79e-05
130	38	-0.01	-0.09	-0.10	1.98e-04	7.24e-05	5.21e-05
130	39	0.06	0.11	-0.13	-2.96e-04	1.89e-04	2.50e-05
130	40	0.02	-0.10	-0.11	2.12e-04	1.28e-04	6.63e-05
130	41	-0.01	0.11	-0.13	-2.86e-04	7.56e-05	4.53e-05
130	42	-0.05	-0.10	-0.10	2.22e-04	1.45e-05	8.65e-05
130	43	0.07	0.11	-0.13	-3.01e-04	2.07e-04	1.59e-05
130	44	0.03	-0.09	-0.11	2.06e-04	1.46e-04	5.72e-05
130	45	-0.02	0.10	-0.13	-2.80e-04	5.72e-05	5.44e-05
130	46	-0.06	-0.10	-0.10	2.27e-04	-3.89e-06	9.56e-05
130	47	-0.22	-7.26e-03	-0.10	5.67e-06	-2.48e-04	1.36e-04
130	48	0.23	0.02	-0.13	-7.95e-05	4.52e-04	-2.42e-05
130	49	0.02	-0.15	-0.10	3.43e-04	1.16e-04	4.87e-05
130	50	-9.38e-03	0.16	-0.13	-4.16e-04	8.75e-05	6.29e-05
131	1	6.15e-03	9.77e-03	-0.06	-4.33e-05	3.70e-05	-6.70e-05
131	2	6.09e-03	9.80e-03	-0.06	-4.38e-05	3.71e-05	-6.73e-05
131	3	8.63e-03	0.01	-0.07	-4.96e-05	4.50e-05	-7.97e-05
131	4	8.57e-03	0.01	-0.07	-5.01e-05	4.51e-05	-8.00e-05
131	5	4.42e-03	7.13e-03	-0.05	-3.16e-05	2.74e-05	-4.92e-05
131	6	4.36e-03	7.15e-03	-0.05	-3.21e-05	2.75e-05	-4.94e-05
131	7	6.90e-03	9.00e-03	-0.05	-3.79e-05	3.54e-05	-6.19e-05
131	8	6.85e-03	9.03e-03	-0.05	-3.84e-05	3.55e-05	-6.21e-05
131	9	6.04e-03	9.82e-03	-0.06	-4.43e-05	3.72e-05	-6.75e-05
131	10	7.89e-03	0.01	-0.07	-4.77e-05	4.26e-05	-7.59e-05
131	11	7.77e-03	0.01	-0.07	-4.87e-05	4.28e-05	-7.64e-05
131	12	4.31e-03	7.18e-03	-0.05	-3.26e-05	2.76e-05	-4.97e-05
131	13	6.16e-03	8.44e-03	-0.05	-3.60e-05	3.30e-05	-5.81e-05
131	14	6.05e-03	8.49e-03	-0.05	-3.70e-05	3.32e-05	-5.86e-05
131	15	0.11	0.05	-0.05	-1.34e-04	3.11e-04	-5.57e-06
131	16	0.13	-4.98e-04	-0.05	2.84e-06	3.57e-04	-2.84e-05
131	17	-0.12	0.02	-0.05	-7.11e-05	-2.96e-04	-8.02e-05
131	18	-0.10	-0.03	-0.05	6.55e-05	-2.50e-04	-1.03e-04
131	19	0.13	0.05	-0.05	-1.57e-04	3.49e-04	-8.64e-06
131	20	0.12	-8.98e-03	-0.05	2.61e-05	3.20e-04	-2.53e-05
131	21	-0.11	0.02	-0.05	-9.43e-05	-2.59e-04	-8.32e-05
131	22	-0.12	-0.04	-0.05	8.87e-05	-2.88e-04	-9.99e-05
131	23	0.16	0.07	-0.05	-1.89e-04	4.11e-04	-4.68e-06
131	24	0.18	0.02	-0.05	-5.23e-05	4.58e-04	-2.75e-05

131	25	-0.17	-4.78e-03	-0.05	-1.60e-05	-3.96e-04	-8.10e-05
131	26	-0.15	-0.05	-0.05	1.21e-04	-3.50e-04	-1.04e-04
131	27	0.17	0.08	-0.05	-2.12e-04	4.49e-04	-7.76e-06
131	28	0.16	0.01	-0.05	-2.90e-05	4.20e-04	-2.44e-05
131	29	-0.15	3.70e-03	-0.05	-3.92e-05	-3.59e-04	-8.41e-05
131	30	-0.16	-0.06	-0.05	1.44e-04	-3.88e-04	-1.01e-04
131	31	8.17e-03	0.09	-0.05	-2.71e-04	4.47e-05	-5.05e-06
131	32	0.07	-0.07	-0.05	1.84e-04	1.99e-04	-8.11e-05
131	33	-0.06	0.08	-0.05	-2.52e-04	-1.38e-04	-2.74e-05
131	34	2.66e-03	-0.07	-0.05	2.03e-04	1.65e-05	-1.03e-04
131	35	0.02	0.10	-0.05	-2.88e-04	7.48e-05	-4.79e-06
131	36	0.09	-0.06	-0.05	1.68e-04	2.29e-04	-8.08e-05
131	37	-0.08	0.08	-0.05	-2.36e-04	-1.68e-04	-2.77e-05
131	38	-9.95e-03	-0.08	-0.05	2.19e-04	-1.36e-05	-1.04e-04
131	39	0.06	0.12	-0.05	-3.49e-04	1.70e-04	-1.53e-05
131	40	0.02	-0.09	-0.05	2.62e-04	7.33e-05	-7.09e-05
131	41	-0.01	0.11	-0.05	-3.30e-04	-1.21e-05	-3.77e-05
131	42	-0.05	-0.10	-0.05	2.80e-04	-1.09e-04	-9.32e-05
131	43	0.07	0.12	-0.05	-3.65e-04	2.00e-04	-1.50e-05
131	44	0.03	-0.09	-0.05	2.45e-04	1.03e-04	-7.06e-05
131	45	-0.02	0.10	-0.05	-3.13e-04	-4.22e-05	-3.79e-05
131	46	-0.06	-0.11	-0.05	2.97e-04	-1.39e-04	-9.35e-05
131	47	-0.22	-0.03	-0.05	6.24e-05	-5.34e-04	-1.13e-04
131	48	0.23	0.05	-0.04	-1.31e-04	5.95e-04	4.16e-06
131	49	0.02	-0.14	-0.04	3.84e-04	5.89e-05	-1.07e-04
131	50	-9.70e-03	0.15	-0.05	-4.52e-04	2.25e-06	-1.73e-06
132	1	6.18e-03	7.16e-03	-0.08	-2.27e-04	7.31e-05	-5.86e-06
132	2	6.20e-03	7.18e-03	-0.08	-2.28e-04	7.32e-05	-5.59e-06
132	3	8.65e-03	8.92e-03	-0.10	-3.30e-04	1.03e-04	-2.83e-05
132	4	8.67e-03	8.94e-03	-0.10	-3.31e-04	1.03e-04	-2.80e-05
132	5	4.45e-03	5.25e-03	-0.06	-1.65e-04	5.30e-05	-3.98e-06
132	6	4.47e-03	5.27e-03	-0.06	-1.66e-04	5.31e-05	-3.71e-06
132	7	6.93e-03	7.01e-03	-0.08	-2.68e-04	8.28e-05	-2.64e-05
132	8	6.94e-03	7.03e-03	-0.08	-2.69e-04	8.29e-05	-2.61e-05
132	9	6.21e-03	7.20e-03	-0.08	-2.29e-04	7.34e-05	-5.32e-06
132	10	7.91e-03	8.39e-03	-0.10	-2.99e-04	9.39e-05	-2.16e-05
132	11	7.94e-03	8.43e-03	-0.10	-3.01e-04	9.43e-05	-2.10e-05
132	12	4.48e-03	5.29e-03	-0.06	-1.67e-04	5.33e-05	-3.44e-06
132	13	6.18e-03	6.48e-03	-0.07	-2.37e-04	7.38e-05	-1.97e-05
132	14	6.22e-03	6.52e-03	-0.08	-2.39e-04	7.42e-05	-1.91e-05
132	15	0.11	0.03	-0.07	-2.52e-04	2.46e-04	-2.61e-05
132	16	0.12	-0.03	-0.07	-1.47e-04	2.65e-04	-3.59e-05
132	17	-0.11	0.04	-0.07	-2.65e-04	-1.35e-04	1.00e-05
132	18	-0.10	-0.02	-0.06	-1.60e-04	-1.17e-04	0.0
132	19	0.12	0.03	-0.07	-2.49e-04	2.63e-04	-3.75e-05
132	20	0.11	-0.03	-0.07	-1.50e-04	2.49e-04	-2.46e-05
132	21	-0.10	0.04	-0.07	-2.62e-04	-1.19e-04	-1.35e-06
132	22	-0.11	-0.02	-0.06	-1.64e-04	-1.33e-04	1.16e-05
132	23	0.14	0.02	-0.07	-2.37e-04	2.84e-04	-4.97e-05
132	24	0.15	-0.04	-0.07	-1.32e-04	3.02e-04	-5.95e-05
132	25	-0.14	0.05	-0.07	-2.80e-04	-1.72e-04	3.36e-05
132	26	-0.13	-7.50e-03	-0.06	-1.75e-04	-1.54e-04	2.38e-05
132	27	0.15	0.02	-0.07	-2.34e-04	3.00e-04	-6.11e-05
132	28	0.14	-0.04	-0.07	-1.35e-04	2.86e-04	-4.82e-05
132	29	-0.13	0.05	-0.07	-2.77e-04	-1.56e-04	2.23e-05
132	30	-0.14	-5.25e-03	-0.06	-1.78e-04	-1.70e-04	3.52e-05
132	31	0.02	0.11	-0.08	-3.79e-04	9.14e-05	-2.07e-06
132	32	0.06	-0.10	-0.06	-2.92e-05	1.53e-04	-3.47e-05
132	33	-0.05	0.11	-0.07	-3.83e-04	-2.30e-05	8.78e-06
132	34	-6.98e-03	-0.09	-0.06	-3.33e-05	3.84e-05	-2.38e-05
132	35	0.03	0.10	-0.08	-3.75e-04	1.03e-04	-9.15e-06
132	36	0.07	-0.10	-0.06	-2.48e-05	1.64e-04	-4.18e-05
132	37	-0.06	0.11	-0.07	-3.88e-04	-3.43e-05	1.59e-05
132	38	-0.02	-0.09	-0.06	-3.77e-05	2.71e-05	-1.68e-05
132	39	0.05	0.10	-0.08	-3.69e-04	1.46e-04	-4.00e-05
132	40	0.02	-0.09	-0.06	-3.97e-05	9.86e-05	3.21e-06
132	41	-0.01	0.10	-0.07	-3.73e-04	3.11e-05	-2.91e-05
132	42	-0.04	-0.09	-0.06	-4.38e-05	-1.58e-05	1.41e-05
132	43	0.06	0.09	-0.08	-3.64e-04	1.57e-04	-4.70e-05
132	44	0.03	-0.09	-0.06	-3.53e-05	1.10e-04	-3.87e-06
132	45	-0.02	0.11	-0.07	-3.77e-04	1.99e-05	-2.20e-05
132	46	-0.05	-0.08	-0.06	-4.82e-05	-2.70e-05	2.11e-05
132	47	-0.19	0.03	-0.06	-2.29e-04	-2.65e-04	3.64e-05
132	48	0.20	-0.01	-0.07	-1.83e-04	3.95e-04	-6.23e-05
132	49	0.01	-0.15	-0.06	6.48e-05	7.33e-05	-1.64e-06
132	50	-3.88e-03	0.16	-0.08	-4.77e-04	5.65e-05	-2.43e-05
133	1	5.46e-03	6.57e-03	-0.08	-2.34e-04	7.20e-05	-7.70e-06

133	2	5.46e-03	6.57e-03	-0.08	-2.35e-04	7.22e-05	-7.26e-06
133	3	7.85e-03	8.25e-03	-0.10	-3.39e-04	1.06e-04	-3.06e-05
133	4	7.84e-03	8.26e-03	-0.10	-3.41e-04	1.06e-04	-3.02e-05
133	5	3.93e-03	4.81e-03	-0.06	-1.70e-04	5.17e-05	-5.39e-06
133	6	3.93e-03	4.82e-03	-0.06	-1.71e-04	5.19e-05	-4.95e-06
133	7	6.32e-03	6.50e-03	-0.08	-2.75e-04	8.53e-05	-2.83e-05
133	8	6.31e-03	6.50e-03	-0.08	-2.77e-04	8.55e-05	-2.79e-05
133	9	5.46e-03	6.58e-03	-0.09	-2.36e-04	7.24e-05	-6.82e-06
133	10	7.13e-03	7.74e-03	-0.10	-3.08e-04	9.55e-05	-2.38e-05
133	11	7.13e-03	7.76e-03	-0.10	-3.10e-04	9.59e-05	-2.29e-05
133	12	3.93e-03	4.83e-03	-0.06	-1.72e-04	5.21e-05	-4.50e-06
133	13	5.60e-03	5.99e-03	-0.07	-2.44e-04	7.52e-05	-2.14e-05
133	14	5.60e-03	6.01e-03	-0.08	-2.46e-04	7.56e-05	-2.06e-05
133	15	0.11	0.04	-0.08	-2.71e-04	2.53e-04	-2.48e-05
133	16	0.12	-0.02	-0.07	-1.75e-04	2.72e-04	-3.55e-05
133	17	-0.11	0.03	-0.07	-2.49e-04	-1.42e-04	6.32e-06
133	18	-0.10	-0.03	-0.06	-1.53e-04	-1.23e-04	-4.37e-06
133	19	0.12	0.04	-0.08	-2.76e-04	2.70e-04	-3.63e-05
133	20	0.11	-0.02	-0.07	-1.69e-04	2.55e-04	-2.39e-05
133	21	-0.10	0.03	-0.07	-2.55e-04	-1.25e-04	-5.18e-06
133	22	-0.11	-0.03	-0.06	-1.48e-04	-1.39e-04	7.13e-06
133	23	0.14	0.04	-0.08	-2.83e-04	2.92e-04	-4.95e-05
133	24	0.15	-0.01	-0.07	-1.88e-04	3.11e-04	-6.02e-05
133	25	-0.14	0.02	-0.06	-2.36e-04	-1.81e-04	3.11e-05
133	26	-0.13	-0.03	-0.06	-1.41e-04	-1.61e-04	2.04e-05
133	27	0.15	0.05	-0.08	-2.89e-04	3.09e-04	-6.10e-05
133	28	0.14	-0.01	-0.07	-1.82e-04	2.94e-04	-4.87e-05
133	29	-0.13	0.03	-0.06	-2.42e-04	-1.64e-04	1.96e-05
133	30	-0.14	-0.04	-0.06	-1.35e-04	-1.78e-04	3.19e-05
133	31	0.02	0.10	-0.08	-3.74e-04	9.24e-05	-1.39e-06
133	32	0.06	-0.08	-0.06	-5.63e-05	1.56e-04	-3.71e-05
133	33	-0.05	0.09	-0.07	-3.68e-04	-2.60e-05	7.93e-06
133	34	-7.62e-03	-0.09	-0.06	-4.98e-05	3.79e-05	-2.77e-05
133	35	0.03	0.10	-0.08	-3.78e-04	1.04e-04	-8.82e-06
133	36	0.07	-0.08	-0.06	-6.00e-05	1.68e-04	-4.45e-05
133	37	-0.06	0.09	-0.07	-3.64e-04	-3.76e-05	1.54e-05
133	38	-0.02	-0.09	-0.06	-4.61e-05	2.62e-05	-2.03e-05
133	39	0.05	0.11	-0.08	-3.93e-04	1.48e-04	-3.97e-05
133	40	0.02	-0.09	-0.06	-3.70e-05	1.00e-04	1.29e-06
133	41	-0.01	0.11	-0.07	-3.87e-04	3.01e-05	-3.04e-05
133	42	-0.04	-0.10	-0.06	-3.05e-05	-1.82e-05	1.06e-05
133	43	0.06	0.11	-0.08	-3.97e-04	1.60e-04	-4.72e-05
133	44	0.03	-0.09	-0.06	-4.08e-05	1.12e-04	-6.13e-06
133	45	-0.02	0.10	-0.07	-3.83e-04	1.84e-05	-2.30e-05
133	46	-0.05	-0.10	-0.06	-2.68e-05	-2.98e-05	1.80e-05
133	47	-0.19	-6.55e-03	-0.06	-1.84e-04	-2.77e-04	3.17e-05
133	48	0.20	0.02	-0.08	-2.40e-04	4.07e-04	-6.08e-05
133	49	0.01	-0.15	-0.06	5.58e-05	5.69e-05	-5.79e-06
133	50	-3.44e-03	0.16	-0.08	-4.80e-04	7.34e-05	-2.33e-05
134	1	5.11e-03	9.11e-03	-0.09	-2.40e-04	3.22e-05	3.57e-05
134	2	5.11e-03	9.11e-03	-0.09	-2.40e-04	3.22e-05	3.56e-05
134	3	7.17e-03	0.01	-0.10	-3.02e-04	4.22e-05	5.29e-05
134	4	7.17e-03	0.01	-0.11	-3.03e-04	4.22e-05	5.29e-05
134	5	3.69e-03	6.67e-03	-0.07	-1.77e-04	2.36e-05	2.59e-05
134	6	3.69e-03	6.67e-03	-0.07	-1.78e-04	2.36e-05	2.59e-05
134	7	5.75e-03	8.70e-03	-0.08	-2.40e-04	3.35e-05	4.32e-05
134	8	5.75e-03	8.71e-03	-0.08	-2.40e-04	3.36e-05	4.31e-05
134	9	5.10e-03	9.12e-03	-0.09	-2.41e-04	3.23e-05	3.55e-05
134	10	6.55e-03	0.01	-0.10	-2.83e-04	3.92e-05	4.77e-05
134	11	6.55e-03	0.01	-0.10	-2.85e-04	3.92e-05	4.76e-05
134	12	3.68e-03	6.68e-03	-0.07	-1.79e-04	2.37e-05	2.58e-05
134	13	5.13e-03	8.09e-03	-0.08	-2.21e-04	3.06e-05	3.80e-05
134	14	5.12e-03	8.11e-03	-0.08	-2.22e-04	3.06e-05	3.79e-05
134	15	0.11	0.05	-0.07	-2.25e-04	3.09e-04	4.18e-05
134	16	0.12	-5.12e-04	-0.06	-1.46e-04	3.38e-04	5.30e-05
134	17	-0.11	0.02	-0.09	-2.58e-04	-2.82e-04	1.26e-05
134	18	-0.10	-0.03	-0.08	-1.80e-04	-2.53e-04	2.39e-05
134	19	0.12	0.05	-0.07	-2.38e-04	3.11e-04	4.17e-05
134	20	0.11	-8.91e-03	-0.06	-1.33e-04	3.35e-04	5.31e-05
134	21	-0.10	0.02	-0.09	-2.71e-04	-2.80e-04	1.25e-05
134	22	-0.11	-0.04	-0.08	-1.67e-04	-2.56e-04	2.40e-05
134	23	0.14	0.07	-0.07	-2.08e-04	3.65e-04	4.65e-05
134	24	0.15	0.02	-0.06	-1.29e-04	3.94e-04	5.78e-05
134	25	-0.14	-5.37e-03	-0.09	-2.75e-04	-3.39e-04	7.83e-06
134	26	-0.13	-0.05	-0.08	-1.97e-04	-3.10e-04	1.91e-05
134	27	0.15	0.08	-0.07	-2.21e-04	3.68e-04	4.64e-05
134	28	0.14	0.01	-0.06	-1.16e-04	3.92e-04	5.79e-05

134	29	-0.13	3.03e-03	-0.09	-2.88e-04	-3.36e-04	7.73e-06
134	30	-0.14	-0.06	-0.08	-1.84e-04	-3.13e-04	1.92e-05
134	31	0.02	0.09	-0.08	-3.28e-04	6.79e-05	1.84e-05
134	32	0.06	-0.07	-0.06	-6.63e-05	1.65e-04	5.60e-05
134	33	-0.05	0.08	-0.08	-3.38e-04	-1.09e-04	9.66e-06
134	34	-8.18e-03	-0.07	-0.07	-7.64e-05	-1.27e-05	4.73e-05
134	35	0.03	0.10	-0.08	-3.23e-04	8.49e-05	1.98e-05
134	36	0.07	-0.06	-0.06	-6.12e-05	1.82e-04	5.74e-05
134	37	-0.06	0.07	-0.08	-3.43e-04	-1.26e-04	8.23e-06
134	38	-0.02	-0.08	-0.07	-8.15e-05	-2.97e-05	4.58e-05
134	39	0.05	0.12	-0.08	-3.72e-04	7.66e-05	1.80e-05
134	40	0.02	-0.09	-0.06	-2.28e-05	1.56e-04	5.63e-05
134	41	-0.01	0.11	-0.09	-3.82e-04	-1.01e-04	9.31e-06
134	42	-0.04	-0.10	-0.07	-3.30e-05	-2.15e-05	4.76e-05
134	43	0.06	0.12	-0.08	-3.67e-04	9.37e-05	1.95e-05
134	44	0.03	-0.09	-0.06	-1.78e-05	1.73e-04	5.78e-05
134	45	-0.02	0.10	-0.09	-3.87e-04	-1.18e-04	7.87e-06
134	46	-0.05	-0.11	-0.07	-3.80e-05	-3.85e-05	4.62e-05
134	47	-0.19	-0.03	-0.09	-2.37e-04	-4.83e-04	1.27e-05
134	48	0.20	0.05	-0.06	-1.68e-04	5.38e-04	5.30e-05
134	49	0.01	-0.14	-0.06	3.80e-05	5.33e-05	3.84e-05
134	50	-3.36e-03	0.15	-0.09	-4.43e-04	1.84e-06	2.73e-05
135	1	0.02	0.03	-0.06	-4.62e-05	5.55e-05	-6.38e-05
135	2	0.02	0.03	-0.06	-4.67e-05	5.79e-05	-6.44e-05
135	3	0.02	0.03	-0.07	-6.09e-05	6.45e-05	-7.01e-05
135	4	0.02	0.03	-0.07	-6.14e-05	6.70e-05	-7.08e-05
135	5	0.01	0.02	-0.05	-3.41e-05	4.10e-05	-4.67e-05
135	6	0.01	0.02	-0.05	-3.46e-05	4.34e-05	-4.74e-05
135	7	0.02	0.02	-0.05	-4.89e-05	5.00e-05	-5.31e-05
135	8	0.02	0.02	-0.06	-4.93e-05	5.24e-05	-5.38e-05
135	9	0.02	0.03	-0.07	-4.72e-05	6.03e-05	-6.50e-05
135	10	0.02	0.03	-0.07	-5.65e-05	6.18e-05	-6.82e-05
135	11	0.02	0.03	-0.07	-5.75e-05	6.67e-05	-6.95e-05
135	12	0.01	0.02	-0.05	-3.51e-05	4.58e-05	-4.80e-05
135	13	0.01	0.02	-0.05	-4.44e-05	4.73e-05	-5.12e-05
135	14	0.01	0.02	-0.05	-4.54e-05	5.21e-05	-5.25e-05
135	15	0.19	0.08	-0.05	-1.35e-04	3.01e-04	5.20e-06
135	16	0.22	3.44e-03	-0.05	-5.95e-06	3.40e-04	-2.30e-05
135	17	-0.19	0.04	-0.05	-7.41e-05	-2.51e-04	-7.56e-05
135	18	-0.16	-0.04	-0.05	5.52e-05	-2.12e-04	-1.04e-04
135	19	0.21	0.10	-0.05	-1.57e-04	3.34e-04	0.0
135	20	0.20	-0.01	-0.05	1.59e-05	3.07e-04	-1.82e-05
135	21	-0.17	0.05	-0.05	-9.60e-05	-2.18e-04	-8.04e-05
135	22	-0.19	-0.06	-0.05	7.71e-05	-2.45e-04	-9.89e-05
135	23	0.26	0.12	-0.05	-1.91e-04	3.88e-04	2.93e-06
135	24	0.29	0.04	-0.05	-6.13e-05	4.27e-04	-2.53e-05
135	25	-0.26	3.75e-03	-0.06	-1.88e-05	-3.38e-04	-7.33e-05
135	26	-0.23	-0.08	-0.05	1.10e-04	-2.99e-04	-1.01e-04
135	27	0.28	0.13	-0.05	-2.12e-04	4.21e-04	-1.88e-06
135	28	0.26	0.02	-0.05	-3.94e-05	3.94e-04	-2.05e-05
135	29	-0.24	0.02	-0.06	-4.07e-05	-3.05e-04	-7.81e-05
135	30	-0.25	-0.09	-0.05	1.32e-04	-3.32e-04	-9.67e-05
135	31	0.02	0.16	-0.05	-2.65e-04	6.16e-05	9.85e-06
135	32	0.12	-0.11	-0.05	1.66e-04	1.93e-04	-8.42e-05
135	33	-0.10	0.15	-0.05	-2.46e-04	-1.04e-04	-1.44e-05
135	34	5.98e-03	-0.12	-0.05	1.85e-04	2.76e-05	-1.08e-04
135	35	0.04	0.17	-0.05	-2.81e-04	8.77e-05	9.17e-06
135	36	0.14	-0.10	-0.05	1.50e-04	2.19e-04	-8.49e-05
135	37	-0.12	0.14	-0.05	-2.30e-04	-1.30e-04	-1.37e-05
135	38	-0.01	-0.13	-0.05	2.01e-04	1.46e-06	-1.08e-04
135	39	0.10	0.21	-0.05	-3.38e-04	1.73e-04	-6.20e-06
135	40	0.04	-0.15	-0.05	2.39e-04	8.18e-05	-6.81e-05
135	41	-0.01	0.20	-0.06	-3.19e-04	7.37e-06	-3.04e-05
135	42	-0.08	-0.17	-0.05	2.58e-04	-8.38e-05	-9.24e-05
135	43	0.12	0.22	-0.05	-3.54e-04	1.99e-04	-6.88e-06
135	44	0.06	-0.14	-0.05	2.23e-04	1.08e-04	-6.88e-05
135	45	-0.03	0.19	-0.06	-3.03e-04	-1.87e-05	-2.98e-05
135	46	-0.10	-0.18	-0.05	2.74e-04	-1.10e-04	-9.17e-05
135	47	-0.35	-0.05	-0.06	5.57e-05	-4.65e-04	-1.09e-04
135	48	0.37	0.09	-0.05	-1.36e-04	5.54e-04	1.09e-05
135	49	0.03	-0.23	-0.05	3.55e-04	2.58e-05	-1.12e-04
135	50	-7.51e-03	0.27	-0.06	-4.35e-04	6.34e-05	1.32e-05
136	1	0.01	0.03	-0.10	-3.17e-04	2.08e-05	-4.42e-05
136	2	0.01	0.03	-0.10	-3.19e-04	2.04e-05	-4.47e-05
136	3	0.02	0.04	-0.11	-3.39e-04	1.97e-05	-5.26e-05
136	4	0.02	0.04	-0.11	-3.41e-04	1.94e-05	-5.31e-05
136	5	0.01	0.02	-0.07	-2.24e-04	1.59e-05	-3.01e-05

136	6	0.01	0.03	-0.07	-2.26e-04	1.55e-05	-3.06e-05
136	7	0.02	0.03	-0.09	-2.45e-04	1.48e-05	-3.85e-05
136	8	0.02	0.03	-0.09	-2.47e-04	1.45e-05	-3.90e-05
136	9	0.01	0.03	-0.10	-3.21e-04	2.01e-05	-4.53e-05
136	10	0.02	0.04	-0.11	-3.32e-04	2.01e-05	-5.01e-05
136	11	0.02	0.04	-0.11	-3.36e-04	1.93e-05	-5.11e-05
136	12	0.01	0.03	-0.07	-2.28e-04	1.51e-05	-3.12e-05
136	13	0.01	0.03	-0.08	-2.39e-04	1.52e-05	-3.60e-05
136	14	0.01	0.03	-0.08	-2.43e-04	1.44e-05	-3.70e-05
136	15	0.18	0.07	-0.08	-3.05e-04	5.17e-05	-6.61e-05
136	16	0.20	-0.03	-0.07	-1.72e-04	5.50e-05	-9.10e-05
136	17	-0.18	0.09	-0.08	-2.93e-04	-2.40e-05	2.41e-05
136	18	-0.16	-0.02	-0.07	-1.60e-04	-2.07e-05	0.0
136	19	0.20	0.07	-0.08	-3.00e-04	5.47e-05	-8.42e-05
136	20	0.19	-0.03	-0.07	-1.77e-04	5.20e-05	-7.29e-05
136	21	-0.16	0.08	-0.08	-2.88e-04	-2.10e-05	5.99e-06
136	22	-0.17	-0.01	-0.07	-1.65e-04	-2.37e-05	1.72e-05
136	23	0.22	0.05	-0.08	-2.79e-04	5.75e-05	-1.08e-04
136	24	0.24	-0.05	-0.07	-1.45e-04	6.08e-05	-1.33e-04
136	25	-0.22	0.10	-0.08	-3.20e-04	-2.99e-05	6.58e-05
136	26	-0.20	5.05e-04	-0.08	-1.86e-04	-2.65e-05	4.09e-05
136	27	0.24	0.05	-0.08	-2.73e-04	6.06e-05	-1.26e-04
136	28	0.23	-0.04	-0.07	-1.51e-04	5.78e-05	-1.15e-04
136	29	-0.20	0.10	-0.08	-3.14e-04	-2.68e-05	4.77e-05
136	30	-0.21	4.14e-03	-0.08	-1.92e-04	-2.96e-05	5.89e-05
136	31	0.04	0.19	-0.08	-4.57e-04	2.13e-05	-5.45e-06
136	32	0.10	-0.14	-0.07	-1.18e-05	3.24e-05	-8.85e-05
136	33	-0.07	0.20	-0.08	-4.53e-04	-1.40e-06	2.16e-05
136	34	-0.01	-0.14	-0.07	-8.27e-06	9.67e-06	-6.15e-05
136	35	0.05	0.19	-0.08	-4.49e-04	2.31e-05	-1.80e-05
136	36	0.11	-0.15	-0.07	-3.91e-06	3.41e-05	-1.01e-04
136	37	-0.08	0.20	-0.08	-4.61e-04	-3.15e-06	3.41e-05
136	38	-0.02	-0.13	-0.07	-1.61e-05	7.92e-06	-4.90e-05
136	39	0.09	0.18	-0.08	-4.38e-04	3.14e-05	-6.57e-05
136	40	0.04	-0.13	-0.07	-3.03e-05	2.23e-05	-2.83e-05
136	41	-0.02	0.19	-0.08	-4.35e-04	8.70e-06	-3.87e-05
136	42	-0.07	-0.13	-0.07	-2.68e-05	0.0	-1.21e-06
136	43	0.10	0.18	-0.08	-4.30e-04	3.32e-05	-7.82e-05
136	44	0.06	-0.14	-0.07	-2.24e-05	2.40e-05	-4.08e-05
136	45	-0.03	0.19	-0.08	-4.43e-04	6.94e-06	-2.62e-05
136	46	-0.08	-0.12	-0.07	-3.47e-05	-2.18e-06	1.13e-05
136	47	-0.30	0.05	-0.08	-2.14e-04	-4.88e-05	7.49e-05
136	48	0.33	1.83e-03	-0.07	-2.51e-04	7.97e-05	-1.42e-04
136	49	0.02	-0.23	-0.06	1.09e-04	1.71e-05	-5.47e-05
136	50	6.22e-04	0.29	-0.09	-5.74e-04	1.39e-05	-1.22e-05
137	1	0.02	0.03	-0.10	-3.20e-04	1.94e-05	-6.33e-05
137	2	0.02	0.03	-0.10	-3.22e-04	1.99e-05	-6.35e-05
137	3	0.02	0.04	-0.11	-3.41e-04	2.20e-05	-7.13e-05
137	4	0.02	0.04	-0.11	-3.43e-04	2.24e-05	-7.15e-05
137	5	0.01	0.02	-0.07	-2.27e-04	1.36e-05	-4.50e-05
137	6	0.01	0.02	-0.07	-2.29e-04	1.40e-05	-4.52e-05
137	7	0.02	0.03	-0.09	-2.47e-04	1.61e-05	-5.30e-05
137	8	0.02	0.03	-0.09	-2.50e-04	1.66e-05	-5.32e-05
137	9	0.02	0.03	-0.10	-3.24e-04	2.03e-05	-6.37e-05
137	10	0.02	0.04	-0.11	-3.35e-04	2.12e-05	-6.89e-05
137	11	0.02	0.04	-0.11	-3.39e-04	2.21e-05	-6.93e-05
137	12	0.01	0.02	-0.07	-2.31e-04	1.44e-05	-4.54e-05
137	13	0.01	0.03	-0.08	-2.41e-04	1.54e-05	-5.06e-05
137	14	0.01	0.03	-0.08	-2.45e-04	1.62e-05	-5.10e-05
137	15	0.18	0.08	-0.08	-3.06e-04	5.19e-05	-7.90e-05
137	16	0.20	-0.01	-0.08	-1.88e-04	5.54e-05	-1.08e-04
137	17	-0.18	0.06	-0.08	-2.82e-04	-2.62e-05	1.13e-05
137	18	-0.16	-0.03	-0.07	-1.64e-04	-2.27e-05	-1.74e-05
137	19	0.20	0.09	-0.08	-3.15e-04	5.50e-05	-8.87e-05
137	20	0.19	-0.02	-0.08	-1.79e-04	5.23e-05	-9.80e-05
137	21	-0.16	0.07	-0.08	-2.91e-04	-2.31e-05	1.59e-06
137	22	-0.17	-0.03	-0.07	-1.55e-04	-2.58e-05	-7.67e-06
137	23	0.22	0.09	-0.08	-3.18e-04	5.82e-05	-1.18e-04
137	24	0.24	-1.03e-03	-0.08	-2.00e-04	6.17e-05	-1.46e-04
137	25	-0.22	0.05	-0.08	-2.70e-04	-3.25e-05	4.99e-05
137	26	-0.20	-0.04	-0.07	-1.52e-04	-2.89e-05	2.12e-05
137	27	0.24	0.09	-0.08	-3.27e-04	6.13e-05	-1.27e-04
137	28	0.23	-6.58e-03	-0.08	-1.91e-04	5.86e-05	-1.37e-04
137	29	-0.20	0.06	-0.08	-2.79e-04	-2.94e-05	4.02e-05
137	30	-0.21	-0.04	-0.07	-1.43e-04	-3.21e-05	3.09e-05
137	31	0.04	0.18	-0.08	-4.36e-04	2.05e-05	-1.40e-05
137	32	0.10	-0.12	-0.07	-4.14e-05	3.22e-05	-1.10e-04

137	33	-0.07	0.18	-0.08	-4.29e-04	-3.00e-06	1.31e-05
137	34	-9.59e-03	-0.13	-0.07	-3.41e-05	8.75e-06	-8.24e-05
137	35	0.05	0.18	-0.08	-4.39e-04	2.23e-05	-2.55e-05
137	36	0.11	-0.12	-0.07	-4.49e-05	3.41e-05	-1.21e-04
137	37	-0.08	0.17	-0.08	-4.25e-04	-4.86e-06	2.47e-05
137	38	-0.02	-0.13	-0.07	-3.06e-05	6.89e-06	-7.09e-05
137	39	0.09	0.20	-0.09	-4.65e-04	3.08e-05	-4.63e-05
137	40	0.04	-0.14	-0.07	-1.22e-05	2.18e-05	-7.72e-05
137	41	-0.02	0.19	-0.08	-4.58e-04	7.38e-06	-1.92e-05
137	42	-0.06	-0.14	-0.07	-4.89e-06	-1.62e-06	-5.01e-05
137	43	0.10	0.20	-0.09	-4.69e-04	3.27e-05	-5.79e-05
137	44	0.06	-0.14	-0.07	-1.57e-05	2.37e-05	-8.88e-05
137	45	-0.03	0.19	-0.08	-4.54e-04	5.51e-06	-7.64e-06
137	46	-0.08	-0.15	-0.07	-1.35e-06	-3.49e-06	-3.85e-05
137	47	-0.30	6.26e-03	-0.07	-2.06e-04	-5.19e-05	5.73e-05
137	48	0.33	0.05	-0.08	-2.64e-04	8.12e-05	-1.54e-04
137	49	0.03	-0.23	-0.06	1.02e-04	1.33e-05	-8.21e-05
137	50	1.05e-03	0.28	-0.09	-5.72e-04	1.59e-05	-1.43e-05
138	1	0.02	0.03	-0.10	-2.80e-04	4.98e-05	7.28e-05
138	2	0.02	0.03	-0.10	-2.82e-04	5.03e-05	7.22e-05
138	3	0.02	0.04	-0.11	-3.04e-04	5.49e-05	7.88e-05
138	4	0.02	0.04	-0.11	-3.05e-04	5.54e-05	7.82e-05
138	5	0.01	0.02	-0.07	-2.06e-04	3.63e-05	5.28e-05
138	6	0.01	0.02	-0.07	-2.07e-04	3.68e-05	5.22e-05
138	7	0.02	0.03	-0.09	-2.30e-04	4.14e-05	5.89e-05
138	8	0.02	0.03	-0.09	-2.31e-04	4.19e-05	5.83e-05
138	9	0.02	0.03	-0.10	-2.83e-04	5.07e-05	7.16e-05
138	10	0.02	0.03	-0.11	-2.97e-04	5.34e-05	7.70e-05
138	11	0.02	0.04	-0.11	-3.00e-04	5.43e-05	7.58e-05
138	12	0.01	0.02	-0.07	-2.09e-04	3.72e-05	5.16e-05
138	13	0.01	0.03	-0.08	-2.22e-04	3.99e-05	5.71e-05
138	14	0.01	0.03	-0.08	-2.25e-04	4.08e-05	5.59e-05
138	15	0.18	0.09	-0.08	-2.29e-04	1.16e-04	1.18e-05
138	16	0.20	7.07e-03	-0.07	-1.69e-04	1.24e-04	3.04e-05
138	17	-0.18	0.04	-0.08	-2.62e-04	-4.70e-05	8.01e-05
138	18	-0.16	-0.04	-0.08	-2.02e-04	-3.90e-05	9.87e-05
138	19	0.20	0.10	-0.08	-2.40e-04	1.15e-04	2.51e-06
138	20	0.19	-7.05e-03	-0.07	-1.57e-04	1.24e-04	3.97e-05
138	21	-0.16	0.06	-0.08	-2.74e-04	-4.73e-05	7.08e-05
138	22	-0.17	-0.05	-0.08	-1.90e-04	-3.87e-05	1.08e-04
138	23	0.22	0.12	-0.08	-2.19e-04	1.27e-04	-3.48e-05
138	24	0.24	0.04	-0.07	-1.59e-04	1.35e-04	-1.62e-05
138	25	-0.22	7.02e-03	-0.08	-2.71e-04	-5.88e-05	1.27e-04
138	26	-0.20	-0.07	-0.08	-2.11e-04	-5.07e-05	1.45e-04
138	27	0.24	0.14	-0.08	-2.31e-04	1.27e-04	-4.41e-05
138	28	0.23	0.03	-0.07	-1.48e-04	1.36e-04	-6.93e-06
138	29	-0.20	0.02	-0.08	-2.83e-04	-5.90e-05	1.17e-04
138	30	-0.21	-0.09	-0.08	-1.99e-04	-5.04e-05	1.55e-04
138	31	0.04	0.17	-0.08	-3.10e-04	4.93e-05	1.40e-05
138	32	0.10	-0.10	-0.07	-1.10e-04	7.62e-05	7.60e-05
138	33	-0.07	0.15	-0.09	-3.20e-04	0.0	3.45e-05
138	34	-9.86e-03	-0.12	-0.07	-1.20e-04	2.74e-05	9.65e-05
138	35	0.05	0.18	-0.08	-3.08e-04	5.28e-05	0.0
138	36	0.11	-0.09	-0.07	-1.07e-04	7.97e-05	6.20e-05
138	37	-0.08	0.14	-0.09	-3.23e-04	-3.01e-06	4.85e-05
138	38	-0.02	-0.13	-0.07	-1.23e-04	2.39e-05	1.11e-04
138	39	0.09	0.21	-0.09	-3.50e-04	4.84e-05	-1.70e-05
138	40	0.04	-0.15	-0.07	-7.10e-05	7.71e-05	1.07e-04
138	41	-0.02	0.20	-0.09	-3.60e-04	0.0	3.51e-06
138	42	-0.06	-0.16	-0.07	-8.10e-05	2.83e-05	1.28e-04
138	43	0.10	0.22	-0.09	-3.47e-04	5.19e-05	-3.10e-05
138	44	0.06	-0.14	-0.07	-6.83e-05	8.06e-05	9.30e-05
138	45	-0.03	0.19	-0.09	-3.62e-04	-3.92e-06	1.75e-05
138	46	-0.08	-0.17	-0.07	-8.38e-05	2.48e-05	1.42e-04
138	47	-0.30	-0.04	-0.08	-2.42e-04	-9.90e-05	1.51e-04
138	48	0.33	0.09	-0.07	-1.89e-04	1.76e-04	-4.00e-05
138	49	0.03	-0.22	-0.07	-2.77e-05	5.26e-05	1.08e-04
138	50	9.92e-04	0.27	-0.09	-4.03e-04	2.41e-05	2.54e-06
139	1	0.02	0.10	-0.10	-2.76e-04	-2.42e-05	-5.04e-05
139	2	0.02	0.10	-0.10	-2.80e-04	-3.29e-05	-5.05e-05
139	3	0.02	0.11	-0.11	-2.96e-04	-2.33e-05	-5.31e-05
139	4	0.02	0.11	-0.11	-3.00e-04	-3.20e-05	-5.32e-05
139	5	0.01	0.07	-0.08	-2.02e-04	-1.67e-05	-3.54e-05
139	6	0.01	0.07	-0.08	-2.05e-04	-2.53e-05	-3.55e-05
139	7	0.02	0.08	-0.09	-2.22e-04	-1.58e-05	-3.80e-05
139	8	0.02	0.08	-0.09	-2.26e-04	-2.45e-05	-3.82e-05
139	9	0.02	0.10	-0.10	-2.83e-04	-4.15e-05	-5.06e-05

139	10	0.02	0.11	-0.11	-2.90e-04	-2.35e-05	-5.22e-05
139	11	0.02	0.11	-0.11	-2.98e-04	-4.09e-05	-5.25e-05
139	12	0.01	0.07	-0.08	-2.09e-04	-3.40e-05	-3.56e-05
139	13	0.02	0.08	-0.08	-2.16e-04	-1.60e-05	-3.72e-05
139	14	0.02	0.08	-0.09	-2.23e-04	-3.34e-05	-3.75e-05
139	15	0.20	0.13	-0.09	-3.19e-04	4.78e-05	-5.00e-05
139	16	0.22	-0.02	-0.08	-1.40e-04	5.61e-05	-8.82e-05
139	17	-0.19	0.17	-0.08	-2.80e-04	-8.87e-05	1.53e-05
139	18	-0.17	0.03	-0.07	-1.00e-04	-8.04e-05	-2.29e-05
139	19	0.22	0.11	-0.09	-2.91e-04	4.81e-05	-6.27e-05
139	20	0.21	-2.31e-03	-0.08	-1.69e-04	5.57e-05	-7.55e-05
139	21	-0.18	0.15	-0.08	-2.51e-04	-8.83e-05	2.58e-06
139	22	-0.19	0.04	-0.07	-1.29e-04	-8.07e-05	-1.01e-05
139	23	0.25	0.08	-0.09	-2.36e-04	6.48e-05	-9.97e-05
139	24	0.27	-0.07	-0.08	-5.62e-05	7.31e-05	-1.38e-04
139	25	-0.24	0.22	-0.08	-3.63e-04	-1.06e-04	6.51e-05
139	26	-0.22	0.08	-0.07	-1.84e-04	-9.74e-05	2.68e-05
139	27	0.27	0.06	-0.09	-2.07e-04	6.51e-05	-1.12e-04
139	28	0.25	-0.05	-0.08	-8.49e-05	7.28e-05	-1.25e-04
139	29	-0.22	0.20	-0.08	-3.35e-04	-1.05e-04	5.23e-05
139	30	-0.24	0.09	-0.07	-2.13e-04	-9.78e-05	3.96e-05
139	31	0.04	0.31	-0.09	-5.15e-04	-9.63e-06	1.75e-05
139	32	0.11	-0.17	-0.07	8.33e-05	1.80e-05	-1.10e-04
139	33	-0.08	0.33	-0.09	-5.03e-04	-5.06e-05	3.71e-05
139	34	-0.01	-0.16	-0.07	9.52e-05	-2.30e-05	-9.03e-05
139	35	0.05	0.30	-0.09	-4.90e-04	-4.53e-06	2.54e-06
139	36	0.12	-0.19	-0.07	1.08e-04	2.31e-05	-1.25e-04
139	37	-0.09	0.34	-0.09	-5.28e-04	-5.57e-05	5.20e-05
139	38	-0.02	-0.15	-0.07	7.01e-05	-2.81e-05	-7.54e-05
139	39	0.10	0.25	-0.09	-4.19e-04	-8.51e-06	-2.50e-05
139	40	0.05	-0.11	-0.07	-1.22e-05	1.68e-05	-6.74e-05
139	41	-0.02	0.27	-0.09	-4.07e-04	-4.95e-05	-5.45e-06
139	42	-0.07	-0.10	-0.07	0.0	-2.41e-05	-4.78e-05
139	43	0.11	0.24	-0.09	-3.94e-04	-3.41e-06	-4.00e-05
139	44	0.06	-0.13	-0.07	1.29e-05	2.19e-05	-8.23e-05
139	45	-0.03	0.28	-0.09	-4.33e-04	-5.46e-05	9.47e-06
139	46	-0.08	-0.09	-0.07	-2.54e-05	-2.92e-05	-3.29e-05
139	47	-0.33	0.15	-0.07	-1.49e-04	-1.37e-04	5.89e-05
139	48	0.36	-2.46e-03	-0.09	-2.71e-04	1.04e-04	-1.32e-04
139	49	0.03	-0.26	-0.06	1.89e-04	-4.72e-06	-7.47e-05
139	50	1.77e-03	0.42	-0.10	-6.08e-04	-2.79e-05	1.79e-06
140	1	0.02	0.12	-0.10	-3.57e-04	5.21e-05	-1.76e-05
140	2	0.02	0.12	-0.10	-3.66e-04	5.90e-05	-1.83e-05
140	3	0.03	0.13	-0.12	-3.79e-04	5.27e-05	-2.06e-05
140	4	0.03	0.13	-0.12	-3.88e-04	5.96e-05	-2.12e-05
140	5	0.02	0.08	-0.07	-2.54e-04	3.80e-05	-1.06e-05
140	6	0.02	0.08	-0.08	-2.63e-04	4.50e-05	-1.12e-05
140	7	0.02	0.09	-0.09	-2.75e-04	3.87e-05	-1.35e-05
140	8	0.02	0.10	-0.09	-2.84e-04	4.56e-05	-1.42e-05
140	9	0.02	0.12	-0.10	-3.76e-04	6.59e-05	-1.89e-05
140	10	0.02	0.12	-0.11	-3.72e-04	5.25e-05	-1.97e-05
140	11	0.03	0.13	-0.11	-3.90e-04	6.64e-05	-2.10e-05
140	12	0.02	0.09	-0.08	-2.72e-04	5.19e-05	-1.18e-05
140	13	0.02	0.09	-0.08	-2.69e-04	3.85e-05	-1.26e-05
140	14	0.02	0.09	-0.09	-2.87e-04	5.24e-05	-1.39e-05
140	15	0.21	0.15	-0.08	-3.73e-04	9.62e-05	-4.06e-05
140	16	0.23	6.41e-03	-0.08	-1.71e-04	1.03e-04	-6.68e-05
140	17	-0.19	0.17	-0.08	-3.54e-04	-2.60e-05	4.33e-05
140	18	-0.17	0.02	-0.08	-1.52e-04	-1.96e-05	1.71e-05
140	19	0.22	0.14	-0.08	-3.62e-04	9.68e-05	-6.49e-05
140	20	0.21	0.01	-0.08	-1.82e-04	1.02e-04	-4.26e-05
140	21	-0.17	0.16	-0.08	-3.43e-04	-2.54e-05	1.91e-05
140	22	-0.19	0.03	-0.08	-1.64e-04	-2.02e-05	4.14e-05
140	23	0.25	0.13	-0.08	-3.30e-04	1.10e-04	-8.99e-05
140	24	0.27	-0.01	-0.07	-1.28e-04	1.16e-04	-1.16e-04
140	25	-0.24	0.19	-0.08	-3.97e-04	-3.94e-05	9.26e-05
140	26	-0.22	0.05	-0.08	-1.95e-04	-3.29e-05	6.64e-05
140	27	0.27	0.12	-0.08	-3.19e-04	1.10e-04	-1.14e-04
140	28	0.25	-8.78e-03	-0.07	-1.39e-04	1.15e-04	-9.18e-05
140	29	-0.22	0.18	-0.08	-3.86e-04	-3.88e-05	6.83e-05
140	30	-0.23	0.05	-0.08	-2.06e-04	-3.35e-05	9.06e-05
140	31	0.04	0.33	-0.09	-6.03e-04	4.59e-05	1.93e-05
140	32	0.11	-0.16	-0.07	7.21e-05	6.73e-05	-6.80e-05
140	33	-0.08	0.33	-0.09	-5.97e-04	9.27e-06	4.45e-05
140	34	-7.76e-03	-0.15	-0.07	7.78e-05	3.06e-05	-4.28e-05
140	35	0.06	0.32	-0.09	-5.90e-04	4.99e-05	4.54e-06
140	36	0.12	-0.16	-0.07	8.50e-05	7.13e-05	-8.28e-05

140	37	-0.09	0.34	-0.09	-6.10e-04	5.27e-06	5.93e-05
140	38	-0.02	-0.14	-0.07	6.49e-05	2.66e-05	-2.80e-05
140	39	0.10	0.31	-0.09	-5.64e-04	4.78e-05	-6.15e-05
140	40	0.05	-0.14	-0.07	3.35e-05	6.54e-05	1.28e-05
140	41	-0.02	0.31	-0.09	-5.59e-04	1.12e-05	-3.63e-05
140	42	-0.07	-0.13	-0.07	3.91e-05	2.87e-05	3.80e-05
140	43	0.12	0.30	-0.09	-5.51e-04	5.18e-05	-7.63e-05
140	44	0.06	-0.14	-0.07	4.63e-05	6.94e-05	-1.95e-06
140	45	-0.03	0.32	-0.09	-5.71e-04	7.18e-06	-2.16e-05
140	46	-0.08	-0.12	-0.07	2.63e-05	2.47e-05	5.28e-05
140	47	-0.33	0.12	-0.08	-2.33e-04	-6.82e-05	9.83e-05
140	48	0.37	0.06	-0.08	-2.92e-04	1.45e-04	-1.22e-04
140	49	0.03	-0.28	-0.06	2.47e-04	4.20e-05	0.0
140	50	4.68e-03	0.46	-0.10	-7.72e-04	3.45e-05	-2.30e-05

Nodo	**Traslazione X**	**Traslazione Y**	**Traslazione Z**	**Rotazione X**	**Rotazione Y**	**Rotazione Z**
	-0.67	-0.37	-0.18	-7.74e-04	-8.76e-04	-6.24e-04
	0.76	0.46	0.01	5.99e-04	1.01e-03	5.73e-04

Nodo	**Cmb**	**Azione X**	**Azione Y**	**Azione Z**	**Azione RX**	**Azione RY**	**Azione RZ**
		kN	kN	kN	kN m	kN m	kN m
3	1	-19.29	8.96	-965.77	323.93	-158.29	-7.48
3	2	-19.29	8.98	-971.57	325.35	-160.17	-7.51
3	3	-24.67	11.98	-1119.02	398.27	-163.72	-9.22
3	4	-24.68	12.00	-1124.82	399.68	-165.60	-9.25
3	5	-14.26	6.59	-720.23	239.85	-118.95	-5.54
3	6	-14.27	6.61	-726.03	241.26	-120.83	-5.57
3	7	-19.65	9.60	-873.49	314.18	-124.38	-7.28
3	8	-19.65	9.62	-879.29	315.59	-126.26	-7.31
3	9	-19.30	9.00	-977.36	326.76	-162.05	-7.54
3	10	-23.06	11.08	-1073.05	375.97	-162.09	-8.70
3	11	-23.07	11.12	-1084.64	378.79	-165.85	-8.75
3	12	-14.27	6.62	-731.83	242.67	-122.71	-5.60
3	13	-18.03	8.70	-827.51	291.88	-122.75	-6.76
3	14	-18.04	8.74	-839.11	294.71	-126.51	-6.82
3	15	11.40	21.55	-720.33	227.53	-16.30	-0.94
3	16	15.83	5.60	-748.39	267.62	-34.66	3.44
3	17	-48.66	9.98	-814.68	271.54	-207.59	-15.92
3	18	-44.23	-5.96	-842.75	311.63	-225.95	-11.54
3	19	11.74	24.43	-719.23	221.17	-21.45	-2.65
3	20	15.49	2.72	-749.49	273.98	-29.50	5.15
3	21	-48.32	12.86	-813.58	265.17	-212.74	-17.63
3	22	-44.57	-8.84	-843.84	317.99	-220.79	-9.83
3	23	3.20	28.45	-721.41	213.16	-39.22	-2.70
3	24	7.64	12.50	-749.48	253.25	-57.58	1.68
3	25	-40.47	3.09	-813.59	285.91	-184.67	-14.16
3	26	-36.03	-12.86	-841.66	326.00	-203.03	-9.78
3	27	3.54	31.33	-720.31	206.79	-44.37	-4.42
3	28	7.30	9.62	-750.58	259.61	-52.42	3.39
3	29	-40.13	5.97	-812.50	279.55	-189.83	-15.87
3	30	-36.37	-15.74	-842.76	332.36	-197.87	-8.06
3	31	-14.80	36.11	-720.60	196.16	-61.84	-11.29
3	32	-0.01	-17.05	-814.17	329.79	-123.03	3.30
3	33	-32.82	32.64	-748.91	209.37	-119.22	-15.78
3	34	-18.03	-20.52	-842.47	343.00	-180.41	-1.20
3	35	-17.26	38.18	-720.93	191.85	-68.71	-11.81
3	36	-2.47	-14.98	-814.49	325.48	-129.90	2.77
3	37	-30.36	30.57	-748.58	213.68	-112.35	-15.25
3	38	-15.57	-22.59	-842.14	347.31	-173.54	-0.67
3	39	-13.67	45.71	-716.95	174.95	-79.02	-17.01
3	40	-1.14	-26.65	-817.82	351.01	-105.84	9.02
3	41	-31.69	42.24	-745.25	188.15	-136.40	-21.50
3	42	-19.16	-30.12	-846.13	364.21	-163.23	4.53
3	43	-16.13	47.78	-717.27	170.64	-85.89	-17.53
3	44	-3.60	-24.58	-818.15	346.70	-112.72	8.49
3	45	-29.23	40.17	-744.93	192.46	-129.53	-20.97
3	46	-16.70	-32.19	-845.80	368.52	-156.35	5.05
3	47	-53.92	-7.46	-853.99	317.09	-245.70	-14.44
3	48	21.09	23.04	-709.08	222.07	3.45	1.96
3	49	-13.94	-41.41	-858.60	391.35	-146.24	8.57
3	50	-18.89	57.00	-704.47	147.81	-96.01	-21.05
14	1	-59.84	-57.93	-963.58	169.55	-274.47	-8.22
14	2	-60.71	-57.88	-969.96	172.42	-278.91	-8.68
14	3	-63.98	-71.28	-1072.35	136.18	-296.86	-6.64
14	4	-64.84	-71.23	-1078.73	139.05	-301.30	-7.10

14	5	-45.16	-42.74	-724.81	131.17	-205.87	-6.37
14	6	-46.03	-42.69	-731.19	134.04	-210.31	-6.84
14	7	-49.30	-56.09	-833.58	97.81	-228.26	-4.79
14	8	-50.16	-56.04	-839.96	100.68	-232.70	-5.26
14	9	-61.57	-57.83	-976.34	175.29	-283.35	-9.15
14	10	-62.74	-67.27	-1039.72	146.19	-290.15	-7.11
14	11	-64.47	-67.18	-1052.48	151.93	-299.03	-8.04
14	12	-46.90	-42.64	-737.57	136.92	-214.75	-7.30
14	13	-48.06	-52.09	-800.95	107.82	-221.55	-5.27
14	14	-49.79	-51.99	-813.71	113.56	-230.43	-6.20
14	15	191.92	76.21	-719.30	-278.24	580.95	31.53
14	16	127.41	-50.29	-742.92	138.50	373.87	64.41
14	17	-221.04	-45.87	-793.71	97.15	-803.52	-75.90
14	18	-285.55	-172.37	-817.33	513.89	-1010.61	-43.01
14	19	172.56	96.38	-721.17	-343.51	522.61	16.55
14	20	146.76	-70.46	-741.06	203.77	432.21	79.39
14	21	-240.39	-25.70	-795.58	31.89	-861.86	-90.87
14	22	-266.20	-192.54	-815.46	579.16	-952.26	-28.04
14	23	123.68	115.73	-727.52	-418.83	349.79	26.36
14	24	59.18	-10.77	-751.14	-2.09	142.70	59.25
14	25	-152.81	-85.39	-785.49	237.74	-572.36	-70.73
14	26	-217.31	-211.89	-809.11	654.48	-779.44	-37.85
14	27	104.33	135.90	-729.39	-484.09	291.44	11.39
14	28	78.53	-30.94	-749.28	63.18	201.04	74.22
14	29	-172.16	-65.22	-787.36	172.48	-630.70	-85.71
14	30	-197.96	-232.06	-807.25	719.75	-721.10	-22.88
14	31	122.64	181.06	-717.79	-633.05	337.98	-44.44
14	32	-92.38	-240.60	-796.52	756.09	-352.30	65.18
14	33	-1.25	144.44	-740.11	-520.43	-77.36	-76.66
14	34	-216.27	-277.22	-818.84	868.70	-767.64	32.95
14	35	102.17	192.92	-720.26	-675.23	268.64	-45.99
14	36	-112.85	-228.74	-798.99	713.91	-421.65	63.63
14	37	19.22	132.58	-737.65	-478.26	-8.01	-75.12
14	38	-195.80	-289.08	-816.38	910.88	-698.29	34.50
14	39	58.13	248.30	-724.01	-850.60	143.51	-94.35
14	40	-27.87	-307.84	-790.30	973.64	-157.82	115.09
14	41	-65.76	211.67	-746.33	-737.99	-271.83	-126.57
14	42	-151.76	-344.46	-812.62	1086.26	-573.17	82.86
14	43	37.66	260.15	-726.48	-892.78	74.16	-95.90
14	44	-48.34	-295.98	-792.77	931.46	-227.17	113.54
14	45	-45.29	199.82	-743.87	-695.81	-202.48	-125.03
14	46	-131.29	-356.31	-810.16	1128.43	-503.82	84.41
14	47	-285.40	-178.50	-818.38	538.05	-1021.14	-66.78
14	48	191.77	82.34	-718.25	-302.40	591.48	55.30
14	49	-114.55	-432.95	-825.86	1382.54	-409.41	107.48
14	50	20.92	336.79	-710.78	-1146.89	-20.24	-118.96
17	1	-5.31	-28.21	-1182.35	124.62	-211.75	4.04
17	2	-5.31	-28.23	-1195.34	128.87	-214.99	4.04
17	3	-6.91	-45.26	-1402.84	63.88	-242.27	6.70
17	4	-6.91	-45.28	-1415.84	68.12	-245.51	6.69
17	5	-3.98	-20.30	-874.06	98.33	-156.65	2.84
17	6	-3.97	-20.32	-887.05	102.58	-159.89	2.83
17	7	-5.58	-37.35	-1094.55	37.59	-187.16	5.49
17	8	-5.58	-37.37	-1107.54	41.84	-190.41	5.49
17	9	-5.30	-28.25	-1208.34	133.12	-218.24	4.03
17	10	-6.43	-40.14	-1336.70	82.10	-233.11	5.90
17	11	-6.43	-40.18	-1362.68	90.60	-239.60	5.89
17	12	-3.97	-20.34	-900.04	106.83	-163.13	2.82
17	13	-5.10	-32.24	-1028.40	55.81	-178.01	4.70
17	14	-5.09	-32.28	-1054.38	64.31	-184.49	4.68
17	15	20.87	-14.27	-969.09	50.41	-114.17	6.90
17	16	14.83	-35.70	-985.83	108.95	-129.92	11.63
17	17	-24.07	-18.55	-938.68	39.13	-207.78	-3.83
17	18	-30.10	-39.98	-955.41	97.66	-223.54	0.90
17	19	15.81	-12.85	-965.86	45.91	-119.12	5.39
17	20	19.89	-37.12	-989.06	113.44	-124.98	13.14
17	21	-29.13	-17.13	-935.45	34.63	-212.73	-5.34
17	22	-25.04	-41.40	-958.64	102.16	-218.59	2.41
17	23	13.34	-12.03	-964.86	32.80	-130.01	5.87
17	24	7.30	-33.46	-981.60	91.34	-145.77	10.60
17	25	-16.54	-20.78	-942.91	56.73	-191.94	-2.80
17	26	-22.57	-42.21	-959.65	115.27	-207.70	1.93
17	27	8.28	-10.61	-961.63	28.31	-134.96	4.36
17	28	12.36	-34.88	-984.83	95.84	-140.82	12.11
17	29	-21.60	-19.37	-939.68	52.24	-196.89	-4.31
17	30	-17.52	-43.63	-962.88	119.77	-202.75	3.44
17	31	12.18	9.24	-938.92	-21.83	-128.55	-2.38

17	32	-7.94	-62.20	-994.71	173.29	-181.07	13.40
17	33	-1.30	7.95	-929.79	-25.22	-156.64	-5.60
17	34	-21.42	-63.48	-985.59	169.91	-209.16	10.18
17	35	9.92	9.91	-937.65	-27.12	-133.30	-2.69
17	36	-10.19	-61.53	-993.44	168.01	-185.82	13.09
17	37	0.96	7.28	-931.06	-19.94	-151.88	-5.29
17	38	-19.16	-64.15	-986.86	175.19	-204.40	10.49
17	39	-4.69	13.96	-928.15	-36.82	-145.04	-7.40
17	40	8.93	-66.92	-1005.48	188.28	-164.58	18.42
17	41	-18.17	12.68	-919.03	-40.21	-173.13	-10.62
17	42	-4.55	-68.21	-996.35	184.90	-192.66	15.20
17	43	-6.95	14.63	-926.88	-42.11	-149.80	-7.71
17	44	6.67	-66.25	-1004.21	183.00	-169.33	18.11
17	45	-15.91	12.01	-920.30	-34.93	-168.38	-10.31
17	46	-2.29	-68.88	-997.62	190.18	-187.91	15.51
17	47	-30.49	-32.33	-944.86	61.07	-222.91	-2.06
17	48	21.25	-21.91	-979.65	87.00	-114.80	9.85
17	49	-7.90	-87.62	-1014.00	240.75	-186.26	19.64
17	50	-1.34	33.37	-910.51	-92.67	-151.45	-11.84
18	1	-1.53	-28.18	-1144.35	118.39	-216.65	5.24
18	2	-1.47	-28.21	-1157.08	122.56	-219.75	5.25
18	3	-2.63	-44.71	-1355.93	59.17	-245.20	8.04
18	4	-2.57	-44.73	-1368.66	63.34	-248.30	8.05
18	5	-1.16	-20.28	-846.93	93.71	-160.97	3.74
18	6	-1.10	-20.31	-859.66	97.88	-164.06	3.75
18	7	-2.25	-36.81	-1058.51	34.50	-189.52	6.53
18	8	-2.20	-36.83	-1071.24	38.67	-192.61	6.55
18	9	-1.41	-28.23	-1169.81	126.73	-222.84	5.27
18	10	-2.30	-39.75	-1292.45	76.94	-236.64	7.20
18	11	-2.18	-39.80	-1317.91	85.28	-242.83	7.23
18	12	-1.04	-20.33	-872.39	102.06	-167.16	3.76
18	13	-1.92	-31.85	-995.03	52.26	-180.95	5.69
18	14	-1.81	-31.90	-1020.49	60.60	-187.14	5.72
18	15	24.56	-12.86	-901.49	30.73	-107.43	8.18
18	16	18.72	-37.11	-925.11	98.22	-125.41	13.22
18	17	-21.91	-16.66	-938.01	41.84	-219.37	-3.51
18	18	-27.75	-40.92	-961.63	109.32	-237.35	1.53
18	19	19.29	-13.76	-905.06	34.06	-112.41	7.17
18	20	23.98	-36.21	-921.54	94.89	-120.43	14.23
18	21	-27.17	-17.57	-941.57	45.16	-224.35	-4.52
18	22	-22.48	-40.02	-958.06	105.99	-232.37	2.54
18	23	16.78	-20.34	-908.41	22.14	-126.47	6.25
18	24	10.94	-44.60	-932.04	89.62	-144.45	11.28
18	25	-14.13	-9.18	-931.08	50.43	-200.33	-1.58
18	26	-19.97	-33.44	-954.70	117.92	-218.31	3.46
18	27	11.51	-21.24	-911.98	25.46	-131.45	5.24
18	28	16.20	-43.70	-928.47	86.29	-139.47	12.30
18	29	-19.39	-10.08	-934.65	53.76	-205.31	-2.59
18	30	-14.70	-32.54	-951.13	114.59	-213.33	4.47
18	31	15.11	14.11	-886.71	-44.11	-125.63	-1.78
18	32	-4.36	-66.75	-965.45	180.83	-185.57	15.00
18	33	1.17	12.97	-897.67	-40.78	-159.21	-5.29
18	34	-18.30	-67.89	-976.41	184.16	-219.15	11.49
18	35	12.77	11.86	-888.79	-46.69	-131.34	-2.36
18	36	-6.69	-68.99	-967.53	178.25	-191.28	14.42
18	37	3.50	15.21	-895.59	-38.20	-153.50	-4.71
18	38	-15.96	-65.64	-974.33	186.74	-213.44	12.07
18	39	-2.43	11.11	-898.61	-33.02	-142.23	-5.15
18	40	13.18	-63.74	-953.56	169.75	-168.97	18.37
18	41	-16.37	9.96	-909.56	-29.69	-175.81	-8.66
18	42	-0.76	-64.89	-964.51	173.08	-202.55	14.86
18	43	-4.77	8.86	-900.68	-35.60	-147.94	-5.73
18	44	10.85	-65.99	-955.63	167.17	-174.68	17.79
18	45	-14.04	12.21	-907.48	-27.11	-170.10	-8.08
18	46	1.58	-62.64	-962.43	175.66	-196.84	15.44
18	47	-28.38	-20.87	-951.41	83.37	-236.64	-1.88
18	48	25.19	-32.91	-911.70	56.68	-108.14	11.59
18	49	1.21	-89.05	-984.63	240.82	-188.62	20.48
18	50	-4.40	35.27	-878.49	-100.76	-156.15	-10.78
26	1	67.00	-54.98	-963.93	170.95	383.77	10.08
26	2	67.74	-54.94	-970.22	173.77	388.44	10.45
26	3	77.54	-67.31	-1072.12	142.07	440.44	10.62
26	4	78.28	-67.28	-1078.41	144.88	445.11	10.99
26	5	50.13	-40.65	-724.22	131.65	284.88	7.58
26	6	50.87	-40.62	-730.51	134.46	289.55	7.95
26	7	60.67	-52.99	-832.41	102.77	341.55	8.12
26	8	61.41	-52.95	-838.70	105.58	346.22	8.49

26	9	68.47	-54.90	-976.52	176.58	393.12	10.82
26	10	74.38	-63.61	-1039.66	150.74	423.44	10.46
26	11	75.85	-63.54	-1052.25	156.36	432.79	11.20
26	12	51.60	-40.58	-736.81	137.28	294.23	8.32
26	13	57.51	-49.29	-799.95	111.43	324.55	7.96
26	14	58.98	-49.22	-812.54	117.06	333.89	8.70
26	15	241.85	-21.10	-802.32	30.99	933.29	97.50
26	16	284.49	-195.86	-821.13	597.10	1079.17	27.47
26	17	-175.79	104.68	-713.86	-356.91	-464.08	-11.88
26	18	-133.16	-70.08	-732.67	209.21	-318.20	-81.90
26	19	236.58	-38.67	-799.11	86.44	922.09	79.49
26	20	289.76	-178.29	-824.34	541.65	1090.37	45.48
26	21	-181.06	87.12	-710.65	-301.45	-475.28	-29.88
26	22	-127.88	-52.51	-735.88	153.75	-307.00	-63.90
26	23	173.21	-69.67	-791.99	194.61	701.06	93.33
26	24	215.85	-244.43	-810.80	760.72	846.94	23.30
26	25	-107.15	153.25	-724.19	-520.53	-231.85	-7.71
26	26	-64.51	-21.51	-743.01	45.58	-85.97	-77.74
26	27	167.94	-87.24	-788.78	250.06	689.86	75.32
26	28	221.12	-226.86	-814.00	705.27	858.14	41.31
26	29	-112.42	135.69	-720.99	-465.08	-243.05	-25.72
26	30	-59.24	-3.94	-746.21	-9.87	-74.77	-59.73
26	31	45.94	226.81	-749.41	-765.24	274.02	140.91
26	32	188.06	-355.72	-812.12	1121.80	760.29	-92.51
26	33	-79.36	264.55	-722.87	-881.61	-145.19	108.10
26	34	62.76	-317.99	-785.58	1005.44	341.08	-125.32
26	35	25.34	212.24	-746.31	-716.15	204.35	139.66
26	36	167.46	-370.30	-809.02	1170.89	690.62	-93.76
26	37	-58.76	279.12	-725.97	-930.70	-75.53	109.35
26	38	83.36	-303.42	-788.68	956.35	410.74	-124.07
26	39	28.37	168.25	-738.72	-580.40	236.68	80.89
26	40	205.63	-297.17	-822.80	936.96	797.62	-32.49
26	41	-96.93	205.99	-712.19	-696.76	-182.53	48.08
26	42	80.33	-259.43	-796.27	820.59	378.41	-65.30
26	43	7.77	153.68	-735.62	-531.31	167.01	79.64
26	44	185.03	-311.74	-819.70	986.05	727.95	-33.74
26	45	-76.33	220.56	-715.29	-745.85	-112.86	49.33
26	46	100.93	-244.86	-799.37	771.50	448.08	-64.05
26	47	-187.48	95.28	-708.82	-328.40	-507.78	-53.70
26	48	296.18	-186.45	-826.17	568.60	1122.87	69.29
26	49	102.07	-463.52	-824.09	1477.87	439.45	-125.91
26	50	6.63	372.35	-710.90	-1237.67	175.64	141.51
27	1	-2.33	4.06	-336.01	-51.04	-21.05	-0.83
27	2	-2.32	4.08	-336.55	-51.19	-21.16	-0.83
27	3	-4.10	4.37	-373.54	-57.90	-22.53	-0.80
27	4	-4.09	4.39	-374.08	-58.05	-22.64	-0.80
27	5	-1.65	3.07	-251.84	-37.88	-15.46	-0.63
27	6	-1.64	3.09	-252.38	-38.03	-15.57	-0.63
27	7	-3.42	3.38	-289.37	-44.74	-16.94	-0.60
27	8	-3.42	3.40	-289.91	-44.89	-17.05	-0.61
27	9	-2.31	4.10	-337.09	-51.34	-21.27	-0.84
27	10	-3.57	4.28	-362.28	-55.84	-22.09	-0.81
27	11	-3.56	4.32	-363.36	-56.15	-22.31	-0.82
27	12	-1.64	3.11	-252.92	-38.18	-15.68	-0.64
27	13	-2.89	3.29	-278.11	-42.68	-16.50	-0.61
27	14	-2.88	3.33	-279.19	-42.99	-16.72	-0.62
27	15	5.15	10.53	-278.50	-62.24	2.27	-4.55
27	16	6.00	1.68	-234.93	-34.37	12.84	-2.69
27	17	-10.71	4.70	-298.77	-46.87	-44.95	1.46
27	18	-9.87	-4.14	-255.20	-19.00	-34.37	3.31
27	19	5.08	12.15	-286.99	-67.44	-0.46	-4.91
27	20	6.07	0.06	-226.44	-29.16	15.57	-2.33
27	21	-10.79	6.32	-307.26	-52.08	-47.68	1.10
27	22	-9.79	-5.77	-246.71	-13.80	-31.65	3.67
27	23	3.48	14.39	-317.58	-74.88	-5.10	-5.29
27	24	4.33	5.55	-274.01	-47.01	5.48	-3.44
27	25	-9.05	0.83	-259.69	-34.23	-37.59	2.21
27	26	-8.20	-8.01	-216.11	-6.36	-27.01	4.06
27	27	3.41	16.02	-326.07	-80.09	-7.82	-5.65
27	28	4.41	3.93	-265.52	-41.81	8.20	-3.08
27	29	-9.12	2.46	-268.18	-39.43	-40.31	1.85
27	30	-8.13	-9.63	-207.63	-1.15	-24.28	4.42
27	31	-1.39	18.80	-336.44	-89.38	-26.60	-4.60
27	32	1.43	-10.67	-191.18	3.53	8.66	1.57
27	33	-6.15	17.05	-342.52	-84.77	-40.77	-2.80
27	34	-3.33	-12.42	-197.26	8.14	-5.51	3.37
27	35	-1.89	19.96	-348.16	-93.17	-28.81	-4.83

27	36	0.93	-9.51	-202.91	-0.27	6.45	1.35
27	37	-5.65	15.89	-330.79	-80.97	-38.56	-2.58
27	38	-2.83	-13.58	-185.54	11.93	-3.30	3.59
27	39	-1.64	24.22	-364.73	-106.73	-35.68	-5.80
27	40	1.68	-16.09	-162.89	20.88	17.74	2.77
27	41	-6.39	22.47	-370.81	-102.12	-49.85	-4.00
27	42	-3.08	-17.83	-168.97	25.49	3.57	4.57
27	43	-2.14	25.38	-376.45	-110.52	-37.89	-6.03
27	44	1.18	-14.93	-174.61	17.08	15.53	2.54
27	45	-5.89	21.31	-359.09	-98.33	-47.64	-3.78
27	46	-2.58	-18.99	-157.25	29.28	5.78	4.79
27	47	-12.80	-4.82	-297.63	-17.48	-44.25	4.70
27	48	8.08	11.21	-236.07	-63.76	12.14	-5.93
27	49	-0.95	-24.15	-131.18	45.72	17.45	5.12
27	50	-3.76	30.54	-402.52	-126.97	-49.56	-6.36
28	1	-14.97	-4.60	-401.50	-82.69	-48.81	0.56
28	2	-14.97	-4.58	-401.39	-82.67	-48.77	0.56
28	3	-15.78	-5.65	-457.62	-90.31	-57.28	0.88
28	4	-15.78	-5.63	-457.51	-90.29	-57.24	0.88
28	5	-10.93	-3.29	-297.74	-61.74	-35.65	0.40
28	6	-10.93	-3.27	-297.63	-61.72	-35.62	0.40
28	7	-11.73	-4.33	-353.85	-69.36	-44.12	0.72
28	8	-11.74	-4.31	-353.75	-69.34	-44.08	0.72
28	9	-14.97	-4.56	-401.29	-82.64	-48.74	0.56
28	10	-15.54	-5.34	-440.78	-88.03	-54.74	0.78
28	11	-15.54	-5.30	-440.57	-87.98	-54.66	0.79
28	12	-10.93	-3.24	-297.53	-61.69	-35.58	0.40
28	13	-11.49	-4.02	-337.02	-67.07	-41.58	0.62
28	14	-11.49	-3.98	-336.81	-67.03	-41.51	0.63
28	15	73.83	-0.27	-137.22	-49.75	7.39	-1.94
28	16	83.57	-38.97	-211.22	-46.70	-2.68	-1.72
28	17	-106.07	31.56	-429.15	-82.88	-75.40	2.77
28	18	-96.33	-7.14	-503.15	-79.83	-85.47	2.99
28	19	74.03	7.46	-138.90	-52.40	5.16	-2.00
28	20	83.37	-46.70	-209.54	-44.05	-0.45	-1.66
28	21	-105.87	39.29	-430.83	-85.53	-77.63	2.71
28	22	-96.53	-14.87	-501.47	-77.17	-83.24	3.05
28	23	54.87	4.78	-151.76	-50.93	1.81	-2.01
28	24	64.62	-33.92	-225.77	-47.88	-8.26	-1.79
28	25	-87.12	26.51	-414.60	-81.69	-69.82	2.84
28	26	-77.38	-12.18	-488.60	-78.64	-79.89	3.06
28	27	55.08	12.51	-153.45	-53.59	-0.42	-2.07
28	28	64.41	-41.65	-224.08	-45.23	-6.03	-1.73
28	29	-86.91	34.24	-416.28	-84.34	-72.05	2.78
28	30	-77.58	-19.92	-486.92	-75.99	-77.66	3.12
28	31	-0.50	56.01	-153.05	-64.90	-9.83	-0.55
28	32	31.97	-72.97	-399.73	-54.73	-43.41	0.19
28	33	-54.47	65.56	-240.63	-74.84	-34.67	0.87
28	34	-22.00	-63.42	-487.31	-64.67	-68.25	1.60
28	35	-6.19	57.53	-157.42	-65.26	-11.50	-0.57
28	36	26.29	-71.46	-404.10	-55.09	-45.09	0.17
28	37	-48.79	64.05	-236.27	-74.48	-32.99	0.89
28	38	-16.31	-64.94	-482.95	-64.32	-66.58	1.62
28	39	0.18	81.79	-158.67	-73.74	-17.26	-0.74
28	40	31.29	-98.75	-394.12	-45.89	-35.98	0.38
28	41	-53.79	91.34	-246.24	-83.68	-42.10	0.67
28	42	-22.68	-89.20	-481.70	-55.83	-60.82	1.79
28	43	-5.51	83.30	-163.03	-74.10	-18.94	-0.76
28	44	25.61	-97.23	-398.49	-46.25	-37.65	0.36
28	45	-48.11	89.82	-241.88	-83.33	-40.43	0.69
28	46	-16.99	-90.71	-477.34	-55.48	-59.14	1.81
28	47	-131.57	13.03	-534.75	-89.01	-98.44	4.19
28	48	109.07	-20.43	-105.62	-40.57	20.36	-3.14
28	49	-4.34	-125.62	-511.60	-51.05	-58.63	1.09
28	50	-18.16	118.21	-128.76	-78.52	-19.45	-0.04
29	1	0.08	3.17	-419.14	-68.18	-68.06	-1.07
29	2	0.09	3.20	-419.52	-68.31	-68.13	-1.08
29	3	-0.48	4.09	-459.69	-73.89	-72.56	-1.36
29	4	-0.48	4.13	-460.07	-74.02	-72.64	-1.37
29	5	0.08	2.34	-308.99	-49.72	-49.83	-0.79
29	6	0.08	2.38	-309.38	-49.85	-49.90	-0.79
29	7	-0.49	3.27	-349.54	-55.43	-54.33	-1.07
29	8	-0.49	3.31	-349.93	-55.56	-54.41	-1.08
29	9	0.09	3.24	-419.91	-68.44	-68.21	-1.09
29	10	-0.31	3.82	-447.52	-72.17	-71.21	-1.27
29	11	-0.31	3.89	-448.29	-72.43	-71.36	-1.29
29	12	0.09	2.41	-309.76	-49.98	-49.98	-0.80

29	13	-0.32	2.99	-337.38	-53.72	-52.98	-0.99
29	14	-0.31	3.06	-338.15	-53.98	-53.13	-1.00
29	15	10.05	9.22	-334.76	-63.37	-27.88	-5.01
29	16	11.16	-1.70	-307.65	-35.82	-21.35	-3.09
29	17	-11.46	7.13	-342.77	-68.19	-81.91	1.29
29	18	-10.34	-3.79	-315.66	-40.65	-75.38	3.21
29	19	9.95	9.92	-336.54	-65.14	-29.32	-5.20
29	20	11.25	-2.40	-305.88	-34.05	-19.90	-2.90
29	21	-11.55	7.83	-344.55	-69.97	-83.36	1.10
29	22	-10.25	-4.49	-313.88	-38.87	-73.93	3.40
29	23	7.81	10.43	-334.08	-71.03	-33.84	-4.87
29	24	8.93	-0.49	-306.97	-43.49	-27.31	-2.94
29	25	-9.23	5.92	-343.46	-60.53	-75.94	1.14
29	26	-8.11	-5.00	-316.35	-32.99	-69.41	3.06
29	27	7.72	11.13	-335.85	-72.80	-35.29	-5.06
29	28	9.02	-1.19	-305.19	-41.71	-25.86	-2.76
29	29	-9.32	6.62	-345.23	-62.31	-77.39	0.95
29	30	-8.02	-5.70	-314.57	-31.21	-67.97	3.25
29	31	1.22	21.23	-369.20	-97.19	-54.41	-5.05
29	32	4.94	-15.17	-278.83	-5.38	-32.64	1.36
29	33	-5.24	20.60	-371.60	-98.64	-70.62	-3.16
29	34	-1.51	-15.80	-281.23	-6.82	-48.85	3.25
29	35	0.55	21.59	-368.99	-99.49	-56.20	-5.00
29	36	4.27	-14.81	-278.62	-7.68	-34.42	1.40
29	37	-4.57	20.24	-371.80	-96.34	-68.83	-3.20
29	38	-0.84	-16.16	-281.43	-4.53	-47.06	3.20
29	39	0.91	23.57	-375.12	-103.11	-59.23	-5.68
29	40	5.24	-17.51	-272.91	0.54	-27.81	1.99
29	41	-5.54	22.94	-377.52	-104.55	-75.44	-3.79
29	42	-1.21	-18.14	-275.31	-0.91	-44.02	3.88
29	43	0.24	23.93	-374.91	-105.40	-61.02	-5.63
29	44	4.57	-17.15	-272.70	-1.76	-29.60	2.03
29	45	-4.87	22.58	-377.72	-102.25	-73.65	-3.83
29	46	-0.54	-18.50	-275.51	1.39	-42.23	3.83
29	47	-14.61	0.05	-330.57	-45.94	-87.38	3.84
29	48	14.31	5.38	-319.86	-58.07	-15.88	-5.64
29	49	1.19	-28.06	-248.74	25.64	-32.00	4.67
29	50	-1.49	33.49	-401.68	-129.65	-71.25	-6.47
30	1	25.87	2.67	-459.58	-76.49	-72.01	-0.15
30	2	25.96	2.67	-459.73	-76.51	-72.02	-0.15
30	3	29.48	3.81	-509.50	-83.56	-77.65	-0.17
30	4	29.57	3.81	-509.65	-83.58	-77.67	-0.17
30	5	18.84	1.87	-336.38	-55.46	-52.25	-0.10
30	6	18.93	1.87	-336.53	-55.48	-52.26	-0.10
30	7	22.44	3.02	-386.30	-62.52	-57.89	-0.12
30	8	22.53	3.01	-386.45	-62.54	-57.91	-0.12
30	9	26.05	2.67	-459.88	-76.53	-72.03	-0.15
30	10	28.40	3.47	-494.52	-81.44	-75.96	-0.17
30	11	28.57	3.47	-494.82	-81.48	-75.98	-0.16
30	12	19.01	1.87	-336.68	-55.50	-52.27	-0.10
30	13	21.36	2.67	-371.33	-60.40	-56.20	-0.12
30	14	21.54	2.67	-371.63	-60.44	-56.22	-0.11
30	15	114.58	5.39	-523.45	-81.54	-42.17	-1.95
30	16	126.00	1.23	-503.24	-65.89	-40.66	-1.14
30	17	-85.44	3.42	-209.47	-50.68	-68.35	0.92
30	18	-74.01	-0.73	-189.25	-35.03	-66.84	1.73
30	19	124.73	5.35	-520.79	-80.14	-42.02	-2.06
30	20	115.84	1.27	-505.90	-67.28	-40.81	-1.03
30	21	-75.28	3.38	-206.80	-49.28	-68.20	0.81
30	22	-84.17	-0.69	-191.92	-36.42	-66.99	1.84
30	23	93.70	5.24	-492.98	-78.98	-44.88	-2.12
30	24	105.12	1.09	-472.77	-63.33	-43.38	-1.31
30	25	-64.56	3.57	-239.94	-53.24	-65.63	1.09
30	26	-53.13	-0.58	-219.72	-37.59	-64.13	1.90
30	27	103.85	5.20	-490.32	-77.58	-44.73	-2.23
30	28	94.96	1.13	-475.43	-64.72	-43.53	-1.20
30	29	-54.40	3.53	-237.27	-51.85	-65.48	0.99
30	30	-63.29	-0.55	-222.38	-38.99	-64.28	2.01
30	31	31.25	9.55	-437.14	-89.00	-53.09	-1.90
30	32	69.32	-4.30	-369.76	-36.82	-48.06	0.82
30	33	-28.76	8.96	-342.95	-79.74	-60.95	-1.04
30	34	9.32	-4.89	-275.56	-27.57	-55.92	1.68
30	35	24.98	9.50	-428.00	-88.23	-53.91	-1.95
30	36	63.05	-4.34	-360.62	-36.06	-48.88	0.77
30	37	-22.49	9.00	-352.09	-80.51	-60.13	-0.98
30	38	15.58	-4.85	-284.70	-28.33	-55.10	1.73
30	39	65.10	9.42	-428.26	-84.35	-52.59	-2.25

30	40	35.46	-4.17	-378.64	-41.48	-48.57	1.17
30	41	5.10	8.83	-334.06	-75.09	-60.44	-1.39
30	42	-24.54	-4.76	-284.44	-32.22	-56.42	2.03
30	43	58.84	9.37	-419.12	-83.58	-53.40	-2.30
30	44	29.20	-4.21	-369.50	-40.71	-49.38	1.11
30	45	11.36	8.87	-343.20	-75.86	-59.63	-1.33
30	46	-18.28	-4.72	-293.58	-32.99	-55.61	2.08
30	47	-113.80	0.99	-140.38	-36.83	-70.10	2.28
30	48	154.36	3.67	-572.32	-79.74	-38.91	-2.50
30	49	25.94	-8.64	-347.01	-20.27	-52.59	2.30
30	50	14.62	13.29	-365.69	-96.30	-56.41	-2.52
31	1	-0.90	3.12	-461.32	-77.81	-78.51	-0.70
31	2	-0.91	3.16	-461.82	-77.97	-78.64	-0.70
31	3	-1.62	4.06	-505.23	-84.32	-83.87	-0.94
31	4	-1.63	4.09	-505.74	-84.47	-84.00	-0.94
31	5	-0.64	2.32	-339.36	-56.66	-57.35	-0.51
31	6	-0.65	2.35	-339.87	-56.82	-57.47	-0.52
31	7	-1.35	3.25	-383.27	-63.17	-62.71	-0.75
31	8	-1.37	3.28	-383.78	-63.32	-62.83	-0.76
31	9	-0.92	3.19	-462.33	-78.13	-78.76	-0.71
31	10	-1.40	3.78	-492.06	-82.37	-82.27	-0.86
31	11	-1.42	3.85	-493.07	-82.68	-82.52	-0.87
31	12	-0.66	2.38	-340.37	-56.98	-57.60	-0.52
31	13	-1.14	2.97	-370.10	-61.22	-61.10	-0.68
31	14	-1.16	3.04	-371.11	-61.53	-61.35	-0.69
31	15	9.18	7.81	-371.74	-72.69	-36.23	-4.39
31	16	10.30	-4.45	-334.54	-40.20	-28.20	-1.96
31	17	-12.15	9.83	-379.32	-78.33	-90.79	0.74
31	18	-11.03	-2.43	-342.12	-45.84	-82.76	3.17
31	19	9.21	7.39	-370.55	-71.60	-37.11	-4.35
31	20	10.27	-4.03	-335.72	-41.29	-27.31	-2.00
31	21	-12.12	9.41	-378.13	-77.25	-91.67	0.78
31	22	-11.06	-2.01	-343.30	-46.93	-81.88	3.13
31	23	7.01	5.99	-366.63	-67.98	-40.84	-3.81
31	24	8.14	-6.27	-329.43	-35.49	-32.81	-1.38
31	25	-9.99	11.65	-384.43	-83.04	-86.17	0.16
31	26	-8.86	-0.61	-347.22	-50.55	-78.14	2.59
31	27	7.04	5.57	-365.44	-66.89	-41.73	-3.77
31	28	8.10	-5.85	-330.61	-36.57	-31.93	-1.41
31	29	-9.95	11.23	-383.24	-81.96	-87.06	0.19
31	30	-8.89	-0.19	-348.41	-51.64	-77.26	2.55
31	31	0.40	22.82	-417.79	-112.57	-64.69	-5.43
31	32	4.15	-18.05	-293.79	-4.26	-37.93	2.67
31	33	-6.00	23.43	-420.07	-114.27	-81.06	-3.89
31	34	-2.25	-17.44	-296.06	-5.96	-54.29	4.21
31	35	-0.25	22.28	-416.26	-111.16	-66.08	-5.25
31	36	3.50	-18.59	-292.25	-2.85	-39.31	2.84
31	37	-5.35	23.97	-421.60	-115.68	-79.68	-4.06
31	38	-1.60	-16.90	-297.59	-7.37	-52.91	4.03
31	39	0.51	21.42	-413.84	-108.95	-67.64	-5.31
31	40	4.04	-16.65	-297.74	-7.89	-34.98	2.55
31	41	-5.89	22.03	-416.12	-110.64	-84.01	-3.77
31	42	-2.36	-16.04	-300.01	-9.58	-51.35	4.09
31	43	-0.14	20.88	-412.31	-107.54	-69.02	-5.13
31	44	3.39	-17.19	-296.20	-6.47	-36.36	2.72
31	45	-5.24	22.57	-417.65	-112.06	-82.62	-3.94
31	46	-1.71	-15.49	-301.54	-10.99	-49.96	3.91
31	47	-15.34	5.81	-366.85	-67.61	-97.22	2.80
31	48	13.49	-0.43	-347.01	-50.92	-21.76	-4.02
31	49	-0.18	-28.83	-261.08	24.33	-36.78	5.75
31	50	-1.67	34.21	-452.77	-142.86	-82.20	-6.97
32	1	-0.28	-3.39	-374.28	-82.58	-56.57	0.34
32	2	-0.30	-3.37	-374.17	-82.56	-56.57	0.35
32	3	-1.01	-3.55	-426.37	-90.04	-65.98	0.48
32	4	-1.03	-3.53	-426.26	-90.01	-65.98	0.48
32	5	-0.18	-2.45	-277.39	-61.59	-41.44	0.25
32	6	-0.20	-2.43	-277.28	-61.57	-41.44	0.25
32	7	-0.91	-2.62	-329.48	-69.05	-50.85	0.38
32	8	-0.93	-2.60	-329.37	-69.02	-50.85	0.38
32	9	-0.32	-3.35	-374.06	-82.54	-56.57	0.35
32	10	-0.79	-3.50	-410.74	-87.80	-63.16	0.44
32	11	-0.83	-3.46	-410.53	-87.75	-63.16	0.45
32	12	-0.21	-2.41	-277.17	-61.55	-41.44	0.25
32	13	-0.69	-2.57	-313.85	-66.81	-48.03	0.34
32	14	-0.72	-2.52	-313.64	-66.77	-48.03	0.35
32	15	10.39	3.08	-281.62	-67.08	-14.36	-2.65
32	16	8.98	-50.78	-365.09	-60.08	-24.99	-2.38

32	17	-9.93	45.75	-231.35	-69.07	-65.43	2.98
32	18	-11.34	-8.11	-314.83	-62.07	-76.05	3.25
32	19	10.08	-1.92	-287.32	-65.80	-16.13	-2.61
32	20	9.29	-45.78	-359.40	-61.36	-23.23	-2.41
32	21	-10.24	40.75	-237.05	-67.79	-67.19	3.01
32	22	-11.03	-3.11	-309.13	-63.35	-74.29	3.21
32	23	8.23	-5.69	-303.13	-71.62	-21.94	-2.53
32	24	6.82	-59.55	-386.60	-64.62	-32.56	-2.26
32	25	-7.76	54.52	-209.85	-64.54	-57.85	2.86
32	26	-9.18	0.66	-293.32	-57.53	-68.48	3.13
32	27	7.92	-10.69	-308.82	-70.34	-23.70	-2.50
32	28	7.13	-54.55	-380.91	-65.90	-30.80	-2.30
32	29	-8.08	49.52	-215.54	-63.25	-59.62	2.90
32	30	-8.86	5.66	-287.63	-58.82	-66.72	3.09
32	31	4.93	80.86	-166.64	-75.95	-19.84	-0.99
32	32	0.22	-98.69	-444.89	-52.60	-55.26	-0.10
32	33	-1.17	93.66	-151.56	-76.55	-35.16	0.69
32	34	-5.88	-85.89	-429.81	-53.20	-70.58	1.59
32	35	4.28	78.23	-173.10	-77.32	-22.11	-0.96
32	36	-0.43	-101.32	-451.34	-53.96	-57.53	-0.06
32	37	-0.52	96.29	-145.11	-75.19	-32.89	0.66
32	38	-5.23	-83.26	-423.35	-51.84	-68.30	1.56
32	39	3.88	64.17	-185.62	-71.67	-25.72	-0.87
32	40	1.26	-82.01	-425.91	-56.89	-49.38	-0.21
32	41	-2.21	76.98	-170.54	-72.26	-41.04	0.81
32	42	-4.83	-69.21	-410.83	-57.48	-64.70	1.47
32	43	3.24	61.54	-192.07	-73.03	-27.99	-0.84
32	44	0.61	-84.64	-432.36	-58.25	-51.65	-0.18
32	45	-1.56	79.61	-164.09	-70.90	-38.76	0.78
32	46	-4.18	-66.57	-404.38	-56.12	-62.43	1.44
32	47	-14.07	36.77	-240.59	-66.29	-76.65	4.55
32	48	13.12	-41.80	-355.86	-62.87	-13.77	-3.95
32	49	-1.63	-132.45	-505.29	-49.39	-68.07	0.68
32	50	0.68	127.42	-91.16	-79.76	-22.34	-0.08
33	1	2.00	4.29	-295.21	-28.87	32.05	0.89
33	2	1.99	4.31	-295.84	-29.05	32.19	0.90
33	3	3.67	4.66	-329.07	-35.36	35.31	0.90
33	4	3.66	4.68	-329.70	-35.53	35.45	0.91
33	5	1.43	3.23	-220.99	-20.88	23.79	0.67
33	6	1.42	3.25	-221.62	-21.06	23.93	0.67
33	7	3.11	3.60	-254.85	-27.37	27.05	0.68
33	8	3.09	3.62	-255.48	-27.54	27.18	0.68
33	9	1.98	4.34	-296.47	-29.23	32.32	0.90
33	10	3.17	4.55	-318.91	-33.41	34.34	0.90
33	11	3.15	4.60	-320.17	-33.77	34.60	0.91
33	12	1.41	3.28	-222.25	-21.24	24.06	0.68
33	13	2.60	3.49	-244.69	-25.42	26.07	0.68
33	14	2.58	3.53	-245.95	-25.78	26.34	0.69
33	15	10.13	6.67	-274.74	-36.40	58.21	-0.87
33	16	11.05	-5.96	-213.30	3.14	42.49	-3.83
33	17	-6.85	12.72	-255.77	-50.09	7.71	5.17
33	18	-5.92	0.09	-194.33	-10.55	-8.02	2.21
33	19	10.91	5.22	-266.98	-31.72	55.37	-1.21
33	20	10.27	-4.51	-221.06	-1.55	45.33	-3.48
33	21	-6.06	11.27	-248.01	-45.40	4.86	4.83
33	22	-6.71	1.54	-202.09	-15.23	-5.17	2.56
33	23	8.37	2.22	-237.62	-21.96	50.09	-1.82
33	24	9.29	-10.42	-176.18	17.59	34.36	-4.78
33	25	-5.08	17.17	-292.89	-64.54	15.83	6.13
33	26	-4.16	4.54	-231.45	-24.99	0.11	3.16
33	27	9.15	0.76	-229.86	-17.27	47.24	-2.16
33	28	8.50	-8.96	-183.94	12.90	37.21	-4.43
33	29	-4.30	15.72	-285.13	-59.85	12.99	5.78
33	30	-4.95	5.99	-239.21	-29.68	2.95	3.51
33	31	3.11	23.52	-339.78	-87.33	58.88	4.71
33	32	6.18	-18.58	-134.98	44.48	6.46	-5.17
33	33	-1.98	25.34	-334.09	-91.43	43.73	6.52
33	34	1.09	-16.77	-129.29	40.38	-8.69	-3.36
33	35	2.58	22.19	-328.65	-82.99	56.44	4.42
33	36	5.66	-19.92	-123.84	48.82	4.02	-5.46
33	37	-1.45	26.68	-345.23	-95.77	46.17	6.80
33	38	1.62	-15.43	-140.42	36.04	-6.25	-3.08
33	39	5.72	18.69	-313.91	-71.71	49.39	3.54
33	40	3.57	-13.74	-160.85	28.86	15.95	-4.01
33	41	0.63	20.50	-308.22	-75.81	34.24	5.36
33	42	-1.52	-11.93	-155.16	24.76	0.80	-2.20
33	43	5.20	17.35	-302.78	-67.37	46.96	3.26

33	44	3.04	-15.08	-149.71	33.20	13.51	-4.30
33	45	1.16	21.84	-319.36	-80.15	36.68	5.64
33	46	-0.99	-10.59	-166.29	20.42	3.24	-1.91
33	47	-9.12	12.06	-207.43	-46.78	-5.00	6.22
33	48	13.32	-5.30	-261.64	-0.17	55.20	-4.88
33	49	1.52	-26.33	-91.96	69.14	-8.51	-6.25
33	50	2.69	33.09	-377.11	-116.09	58.70	7.59
36	1	-2.19	1.58	-216.42	-21.44	-9.53	-0.32
36	2	-2.18	1.57	-216.40	-21.43	-9.51	-0.32
36	3	-3.23	3.28	-242.24	-29.87	-15.70	-0.58
36	4	-3.23	3.27	-242.23	-29.86	-15.68	-0.58
36	5	-1.47	1.11	-161.16	-15.07	-5.96	-0.25
36	6	-1.46	1.10	-161.14	-15.06	-5.94	-0.26
36	7	-2.51	2.80	-186.99	-23.50	-12.13	-0.52
36	8	-2.51	2.80	-186.97	-23.49	-12.11	-0.52
36	9	-2.18	1.57	-216.38	-21.42	-9.49	-0.32
36	10	-2.92	2.77	-234.50	-27.34	-13.85	-0.50
36	11	-2.91	2.75	-234.46	-27.32	-13.81	-0.51
36	12	-1.46	1.09	-161.13	-15.05	-5.93	-0.26
36	13	-2.20	2.30	-179.24	-20.97	-10.28	-0.44
36	14	-2.19	2.28	-179.21	-20.95	-10.25	-0.44
36	15	4.66	6.34	-168.93	-29.81	18.78	-3.90
36	16	4.09	1.53	-171.74	-17.37	16.44	-2.83
36	17	-7.86	2.04	-171.24	-19.51	-33.29	2.11
36	18	-8.43	-2.77	-174.05	-7.07	-35.63	3.19
36	19	4.63	7.24	-168.41	-32.08	18.63	-3.97
36	20	4.12	0.63	-172.27	-15.09	16.58	-2.77
36	21	-7.89	2.94	-170.71	-21.78	-33.44	2.05
36	22	-8.40	-3.66	-174.58	-4.79	-35.48	3.25
36	23	4.19	8.28	-168.16	-35.01	17.18	-4.73
36	24	3.62	3.47	-170.97	-22.57	14.85	-3.65
36	25	-7.39	0.11	-172.01	-14.31	-31.70	2.93
36	26	-7.96	-4.70	-174.82	-1.87	-34.04	4.01
36	27	4.16	9.17	-167.64	-37.29	17.04	-4.79
36	28	3.65	2.57	-171.50	-20.30	14.99	-3.59
36	29	-7.42	1.01	-171.48	-16.58	-31.84	2.87
36	30	-7.93	-5.60	-175.35	0.41	-33.89	4.07
36	31	0.94	10.45	-166.47	-40.71	3.27	-3.05
36	32	-0.95	-5.58	-175.82	0.74	-4.51	0.53
36	33	-2.82	9.16	-167.16	-37.62	-12.35	-1.25
36	34	-4.71	-6.87	-176.52	3.83	-20.13	2.34
36	35	0.80	11.03	-166.24	-42.27	2.80	-3.30
36	36	-1.10	-5.01	-175.59	-0.82	-4.98	0.29
36	37	-2.68	8.58	-167.39	-36.06	-11.87	-1.00
36	38	-4.57	-7.45	-176.75	5.39	-19.65	2.58
36	39	0.83	13.45	-164.71	-48.30	2.80	-3.26
36	40	-0.85	-8.58	-177.58	8.33	-4.03	0.74
36	41	-2.92	12.16	-165.40	-45.21	-12.82	-1.45
36	42	-4.60	-9.87	-178.27	11.42	-19.65	2.54
36	43	0.69	14.02	-164.48	-49.86	2.32	-3.51
36	44	-0.99	-8.00	-177.35	6.77	-4.51	0.49
36	45	-2.78	11.58	-165.63	-43.65	-12.35	-1.21
36	46	-4.46	-10.45	-178.50	12.98	-19.17	2.79
36	47	-10.53	-3.27	-173.38	-5.75	-45.10	4.55
36	48	6.76	6.85	-169.60	-31.13	28.25	-5.26
36	49	-2.46	-13.12	-180.21	19.99	-10.68	2.51
36	50	-1.31	16.69	-162.77	-56.87	-6.17	-3.23
37	1	-4.57	11.65	-1329.32	505.18	-257.25	-3.91
37	2	-4.57	11.71	-1342.25	509.31	-260.47	-3.92
37	3	-6.62	17.94	-1651.33	670.60	-302.16	-5.23
37	4	-6.62	18.00	-1664.25	674.73	-305.38	-5.24
37	5	-3.29	8.45	-971.30	365.58	-188.70	-2.84
37	6	-3.29	8.51	-984.22	369.71	-191.92	-2.86
37	7	-5.33	14.74	-1293.30	531.00	-233.62	-4.16
37	8	-5.33	14.80	-1306.23	535.13	-236.84	-4.18
37	9	-4.57	11.77	-1355.17	513.44	-263.69	-3.94
37	10	-6.00	16.05	-1554.73	620.98	-288.69	-4.83
37	11	-6.00	16.17	-1580.57	629.24	-295.13	-4.86
37	12	-3.29	8.57	-997.14	373.84	-195.15	-2.88
37	13	-4.72	12.85	-1196.70	481.37	-220.14	-3.77
37	14	-4.72	12.97	-1222.55	489.64	-226.59	-3.80
37	15	23.23	29.34	-1104.27	403.63	-147.56	1.37
37	16	19.31	-0.63	-1118.32	471.53	-158.01	8.07
37	17	-27.52	22.56	-1081.88	391.97	-255.33	-14.81
37	18	-31.44	-7.41	-1095.93	459.86	-265.77	-8.11
37	19	19.76	31.28	-1102.22	398.87	-150.50	-0.11
37	20	22.78	-2.57	-1120.37	476.30	-155.07	9.54

37	21	-30.99	24.50	-1079.83	387.20	-258.27	-16.29
37	22	-27.97	-9.35	-1097.98	464.63	-262.84	-6.64
37	23	16.38	32.26	-1100.98	384.56	-161.78	-1.25
37	24	12.45	2.28	-1115.03	452.46	-172.22	5.45
37	25	-20.66	19.65	-1085.18	411.04	-241.12	-12.20
37	26	-24.59	-10.33	-1099.22	478.94	-251.56	-5.50
37	27	12.91	34.19	-1098.93	379.80	-164.71	-2.72
37	28	15.93	0.34	-1117.07	457.22	-169.29	6.93
37	29	-24.14	21.59	-1083.13	406.28	-244.05	-13.67
37	30	-21.12	-12.26	-1101.27	483.70	-248.62	-4.02
37	31	10.05	61.94	-1080.04	320.34	-173.09	-12.11
37	32	-3.03	-37.98	-1126.87	546.66	-207.91	10.22
37	33	-5.18	59.91	-1073.33	316.84	-205.42	-16.96
37	34	-18.26	-40.01	-1120.16	543.16	-240.24	5.36
37	35	7.99	62.82	-1079.06	314.62	-177.36	-12.89
37	36	-5.09	-37.10	-1125.88	540.94	-212.18	9.43
37	37	-3.12	59.04	-1074.32	322.56	-201.16	-16.18
37	38	-16.20	-40.89	-1121.14	548.88	-235.98	6.15
37	39	-1.52	68.40	-1073.21	304.46	-182.89	-17.03
37	40	8.54	-44.43	-1133.70	562.54	-198.12	15.14
37	41	-16.75	66.36	-1066.50	300.96	-215.22	-21.88
37	42	-6.68	-46.47	-1126.99	559.04	-230.45	10.28
37	43	-3.58	69.27	-1072.22	298.74	-187.15	-17.81
37	44	6.48	-43.56	-1132.72	556.82	-202.39	14.35
37	45	-14.69	65.49	-1067.48	306.68	-210.95	-21.10
37	46	-4.63	-47.34	-1127.98	564.76	-226.19	11.07
37	47	-36.14	3.17	-1086.90	446.62	-275.32	-12.55
37	48	27.93	18.76	-1113.30	416.88	-138.01	5.81
37	49	-2.11	-73.57	-1142.14	624.06	-218.26	17.67
37	50	-6.10	95.50	-1058.06	239.44	-195.08	-24.41
38	1	-2.40	11.16	-1299.26	494.45	-262.32	-1.79
38	2	-2.39	11.21	-1311.65	498.42	-265.40	-1.80
38	3	-3.89	17.35	-1610.81	654.22	-308.42	-2.59
38	4	-3.88	17.40	-1623.20	658.18	-311.50	-2.61
38	5	-1.70	8.10	-950.14	358.18	-192.74	-1.29
38	6	-1.69	8.15	-962.53	362.14	-195.82	-1.30
38	7	-3.18	14.29	-1261.70	517.94	-238.84	-2.09
38	8	-3.18	14.34	-1274.08	521.91	-241.92	-2.11
38	9	-2.38	11.26	-1324.04	502.38	-268.48	-1.82
38	10	-3.44	15.49	-1517.35	606.29	-294.59	-2.35
38	11	-3.43	15.59	-1542.12	614.22	-300.75	-2.38
38	12	-1.68	8.20	-974.92	366.11	-198.90	-1.32
38	13	-2.74	12.43	-1168.23	470.01	-225.01	-1.85
38	14	-2.72	12.53	-1193.01	477.94	-231.17	-1.88
38	15	25.95	24.60	-1050.20	378.70	-143.35	3.55
38	16	21.85	-9.11	-1068.21	455.76	-155.76	11.18
38	17	-26.43	30.26	-1081.32	388.41	-266.60	-14.40
38	18	-30.53	-3.45	-1099.32	465.47	-279.01	-6.77
38	19	22.36	23.43	-1052.23	381.79	-146.79	2.76
38	20	25.44	-7.93	-1066.18	452.66	-152.33	11.97
38	21	-30.02	29.08	-1083.34	391.51	-270.04	-15.19
38	22	-26.94	-2.28	-1097.30	462.37	-275.58	-5.98
38	23	18.88	19.68	-1055.90	398.98	-160.32	1.31
38	24	14.78	-14.04	-1073.91	476.04	-172.73	8.93
38	25	-19.36	35.18	-1075.62	368.13	-249.64	-12.15
38	26	-23.46	1.47	-1093.62	445.18	-262.05	-4.52
38	27	15.29	18.50	-1057.93	402.08	-163.75	0.51
38	28	18.37	-12.86	-1071.88	472.95	-169.29	9.73
38	29	-22.95	34.01	-1077.64	371.22	-253.07	-12.94
38	30	-19.87	2.65	-1091.60	442.09	-258.61	-3.73
38	31	12.39	65.91	-1040.09	292.20	-172.01	-11.63
38	32	-1.26	-46.46	-1100.11	549.05	-213.38	13.80
38	33	-3.32	67.61	-1049.42	295.11	-208.99	-17.01
38	34	-16.97	-44.76	-1109.44	551.97	-250.35	8.41
38	35	10.27	64.43	-1041.80	298.28	-177.10	-12.30
38	36	-3.38	-47.94	-1101.82	555.14	-218.47	13.12
38	37	-1.20	69.09	-1047.71	289.03	-203.90	-16.34
38	38	-14.85	-43.29	-1107.73	545.88	-245.26	9.09
38	39	0.45	62.00	-1046.84	302.51	-183.47	-14.27
38	40	10.69	-42.54	-1093.36	538.74	-201.92	16.44
38	41	-15.27	63.69	-1056.17	305.43	-220.44	-19.66
38	42	-5.03	-40.85	-1102.69	541.65	-238.90	11.05
38	43	-1.68	60.52	-1048.55	308.60	-188.56	-14.94
38	44	8.57	-44.02	-1095.07	544.82	-207.01	15.76
38	45	-13.15	65.17	-1054.46	299.34	-215.35	-18.98
38	46	-2.90	-39.37	-1100.98	535.57	-233.81	11.73
38	47	-35.38	19.12	-1092.91	437.09	-288.93	-13.16

38	48	30.80	2.03	-1056.62	407.07	-133.43	9.94
38	49	-0.20	-76.03	-1117.12	618.96	-223.87	20.47
38	50	-4.38	97.18	-1032.41	225.20	-198.50	-23.69
39	1	18.40	9.15	-972.37	322.71	182.56	7.19
39	2	18.39	9.17	-978.43	324.18	184.55	7.23
39	3	24.23	12.09	-1122.01	393.45	194.66	8.82
39	4	24.22	12.11	-1128.07	394.92	196.65	8.86
39	5	13.62	6.72	-724.52	239.01	136.59	5.33
39	6	13.61	6.74	-730.59	240.48	138.58	5.37
39	7	19.45	9.67	-874.17	309.75	148.69	6.96
39	8	19.44	9.69	-880.23	311.22	150.68	7.00
39	9	18.39	9.19	-984.50	325.65	186.54	7.27
39	10	22.48	11.21	-1077.12	372.22	191.03	8.33
39	11	22.47	11.25	-1089.25	375.17	195.01	8.41
39	12	13.61	6.77	-736.66	241.96	140.57	5.41
39	13	17.70	8.78	-829.27	288.53	145.06	6.47
39	14	17.69	8.83	-841.40	291.47	149.04	6.55
39	15	50.29	13.27	-822.68	264.06	235.66	17.95
39	16	45.29	-9.46	-852.78	318.72	247.80	9.47
39	17	-13.38	25.26	-715.98	215.89	35.06	2.50
39	18	-18.39	2.53	-746.08	270.55	47.19	-5.98
39	19	49.55	10.69	-822.48	269.38	232.87	15.98
39	20	46.02	-6.89	-852.97	313.40	250.59	11.44
39	21	-14.12	22.69	-715.79	221.21	32.27	0.53
39	22	-17.65	5.11	-746.28	265.23	49.98	-4.01
39	23	41.62	5.28	-820.44	279.96	211.77	16.09
39	24	36.62	-17.45	-850.53	334.62	223.91	7.61
39	25	-4.72	33.25	-718.23	199.98	58.95	4.35
39	26	-9.72	10.52	-748.32	254.65	71.08	-4.12
39	27	40.89	2.70	-820.24	285.28	208.98	14.13
39	28	37.36	-14.88	-850.73	329.30	226.70	9.58
39	29	-5.45	30.68	-718.03	205.31	56.16	2.39
39	30	-8.98	13.10	-748.52	249.33	73.87	-2.16
39	31	33.84	43.98	-750.22	183.42	151.29	22.43
39	32	17.16	-31.78	-850.55	365.63	191.74	-5.83
39	33	14.74	47.58	-718.21	168.97	91.11	17.80
39	34	-1.94	-28.18	-818.54	351.18	131.56	-10.46
39	35	31.24	41.58	-749.55	188.20	144.13	21.87
39	36	14.56	-34.17	-849.87	370.40	184.58	-6.38
39	37	17.34	49.98	-718.89	164.20	98.28	18.35
39	38	0.66	-25.78	-819.21	346.41	138.73	-9.90
39	39	31.39	35.40	-749.57	201.16	141.99	15.87
39	40	19.62	-23.20	-851.20	347.90	201.04	0.73
39	41	12.28	39.00	-717.56	186.71	81.81	11.24
39	42	0.52	-19.60	-819.19	333.44	140.86	-3.91
39	43	28.79	33.00	-748.90	205.93	134.83	15.32
39	44	17.02	-25.59	-850.52	352.67	193.87	0.17
39	45	14.88	41.40	-718.24	181.94	88.98	11.80
39	46	3.12	-17.20	-819.86	328.67	148.03	-3.35
39	47	-23.91	24.40	-703.65	215.40	10.65	-2.32
39	48	55.81	-8.60	-865.11	319.21	272.21	14.29
39	49	13.18	-45.65	-864.11	398.42	165.72	-10.88
39	50	18.72	61.45	-704.65	136.18	117.14	22.85
44	1	-0.51	0.59	-313.29	54.87	-61.74	-1.08
44	2	-0.51	0.58	-313.25	54.86	-61.72	-1.08
44	3	-1.18	0.49	-334.19	59.50	-66.67	-1.48
44	4	-1.18	0.48	-334.15	59.49	-66.65	-1.49
44	5	-0.26	0.43	-234.16	40.71	-45.77	-0.77
44	6	-0.26	0.43	-234.12	40.70	-45.75	-0.77
44	7	-0.93	0.33	-255.06	45.34	-50.70	-1.17
44	8	-0.93	0.33	-255.02	45.33	-50.68	-1.17
44	9	-0.50	0.58	-313.21	54.85	-61.70	-1.09
44	10	-0.98	0.52	-327.92	58.11	-65.19	-1.36
44	11	-0.97	0.51	-327.83	58.09	-65.15	-1.37
44	12	-0.25	0.42	-234.08	40.69	-45.73	-0.77
44	13	-0.73	0.36	-248.79	43.95	-49.23	-1.05
44	14	-0.72	0.35	-248.71	43.93	-49.18	-1.06
44	15	11.56	3.93	-212.21	27.63	-3.51	-0.59
44	16	9.61	-0.83	-226.65	42.82	-11.94	3.64
44	17	-10.67	1.61	-258.39	42.31	-83.56	-5.50
44	18	-12.62	-3.14	-272.83	57.50	-91.98	-1.27
44	19	11.37	4.77	-211.14	25.28	-4.33	-1.21
44	20	9.80	-1.67	-227.72	45.16	-11.11	4.25
44	21	-10.86	2.46	-257.32	39.96	-84.38	-6.12
44	22	-12.43	-3.99	-273.90	59.85	-91.16	-0.66
44	23	11.36	4.80	-213.59	25.92	-6.29	-6.65
44	24	9.41	0.04	-228.04	41.11	-14.72	-2.42

44	25	-10.47	0.75	-257.01	44.02	-80.77	0.56
44	26	-12.42	-4.01	-271.45	59.20	-89.20	4.79
44	27	11.17	5.64	-212.53	23.58	-7.11	-7.26
44	28	9.60	-0.81	-229.10	43.46	-13.90	-1.81
44	29	-10.66	1.59	-255.94	41.67	-81.60	-0.06
44	30	-12.23	-4.85	-272.51	61.55	-88.38	5.40
44	31	6.06	8.67	-211.52	15.05	-21.69	-7.25
44	32	-0.45	-7.19	-259.67	65.67	-49.78	6.86
44	33	-0.61	7.97	-225.38	19.46	-45.71	-8.72
44	34	-7.12	-7.88	-273.52	70.08	-73.80	5.39
44	35	6.00	8.93	-211.94	14.54	-22.53	-9.07
44	36	-0.51	-6.93	-260.08	65.16	-50.62	5.04
44	37	-0.55	7.71	-224.96	19.97	-44.87	-6.91
44	38	-7.06	-8.14	-273.10	70.59	-72.96	7.21
44	39	5.41	11.48	-207.97	7.22	-24.43	-9.29
44	40	0.19	-10.00	-263.22	73.50	-47.04	8.90
44	41	-1.25	10.79	-221.82	11.63	-48.45	-10.77
44	42	-6.47	-10.70	-277.08	77.90	-71.06	7.43
44	43	5.35	11.74	-208.38	6.71	-25.27	-11.11
44	44	0.13	-9.74	-263.64	72.99	-47.88	7.09
44	45	-1.19	10.53	-221.41	12.14	-47.61	-8.95
44	46	-6.41	-10.96	-276.66	78.42	-70.22	9.25
44	47	-14.11	-2.01	-277.52	55.40	-102.66	-5.29
44	48	13.05	2.80	-207.52	29.73	7.16	3.43
44	49	-4.40	-14.38	-283.52	88.85	-66.47	11.84
44	50	3.34	15.16	-201.52	-3.72	-29.03	-13.70
45	1	4.01	1.50	-325.42	52.42	26.36	0.44
45	2	4.01	1.49	-325.37	52.41	26.38	0.43
45	3	4.93	2.11	-344.72	55.48	27.35	1.54
45	4	4.93	2.10	-344.67	55.47	27.37	1.53
45	5	2.91	1.07	-243.72	39.04	20.53	0.28
45	6	2.91	1.07	-243.67	39.03	20.56	0.27
45	7	3.83	1.69	-263.02	42.10	21.52	1.39
45	8	3.83	1.68	-262.97	42.09	21.55	1.38
45	9	4.01	1.48	-325.32	52.40	26.41	0.42
45	10	4.65	1.93	-338.93	54.56	27.05	1.21
45	11	4.66	1.91	-338.83	54.54	27.10	1.19
45	12	2.91	1.06	-243.62	39.02	20.58	0.26
45	13	3.55	1.50	-257.23	41.18	21.22	1.06
45	14	3.56	1.49	-257.13	41.16	21.28	1.04
45	15	19.33	7.49	-217.58	24.97	52.23	-1.52
45	16	16.74	-2.41	-242.59	50.36	60.79	-4.31
45	17	-10.18	5.05	-260.29	30.16	-18.94	5.76
45	18	-12.78	-4.85	-285.30	55.56	-10.37	2.97
45	19	18.70	6.33	-221.60	27.94	52.22	-1.88
45	20	17.37	-1.26	-238.57	47.39	60.79	-3.95
45	21	-10.81	3.89	-264.31	33.14	-18.94	5.40
45	22	-12.15	-3.70	-281.28	52.58	-10.37	3.33
45	23	17.24	3.05	-221.87	21.04	52.13	-3.56
45	24	14.64	-6.85	-246.88	46.43	60.69	-6.35
45	25	-8.09	9.49	-256.00	34.10	-18.84	7.80
45	26	-10.69	-0.42	-281.01	59.49	-10.28	5.01
45	27	16.61	1.90	-225.89	24.01	52.13	-3.92
45	28	15.27	-5.69	-242.86	43.46	60.69	-5.99
45	29	-8.72	8.33	-260.02	37.07	-18.84	7.44
45	30	-10.06	0.74	-276.99	56.51	-10.27	5.37
45	31	12.03	18.19	-203.35	-2.84	17.33	4.28
45	32	3.37	-14.82	-286.71	81.80	45.87	-5.01
45	33	3.18	17.46	-216.17	-1.28	-4.02	6.46
45	34	-5.48	-15.56	-299.53	83.36	24.52	-2.83
45	35	11.41	16.86	-204.64	-4.02	17.30	3.67
45	36	2.74	-16.16	-288.00	80.62	45.84	-5.63
45	37	3.81	18.79	-214.88	-0.10	-3.99	7.08
45	38	-4.85	-14.22	-298.24	84.54	24.55	-2.22
45	39	9.94	14.33	-216.75	7.08	17.32	3.08
45	40	5.47	-10.96	-273.32	71.89	45.88	-3.81
45	41	1.08	13.60	-229.56	8.64	-4.03	5.26
45	42	-3.38	-11.69	-286.13	73.45	24.53	-1.63
45	43	9.31	13.00	-218.03	5.90	17.29	2.47
45	44	4.84	-12.29	-274.61	70.71	45.85	-4.42
45	45	1.71	14.93	-228.27	9.82	-4.00	5.87
45	46	-2.76	-10.36	-284.85	74.63	24.56	-1.02
45	47	-16.17	-1.67	-279.23	46.32	-30.02	7.83
45	48	22.72	4.30	-223.65	34.20	71.87	-6.38
45	49	-0.68	-21.98	-307.23	99.98	42.19	-5.53
45	50	7.23	24.62	-195.65	-19.45	-0.33	6.98
47	1	0.0	0.0	-59.10	-35.03	1.58	0.0

47	2	0.0	0.0	-59.10	-35.03	1.58	0.0
47	3	0.0	0.0	-59.10	-35.03	1.58	0.0
47	4	0.0	0.0	-59.10	-35.03	1.58	0.0
47	5	0.0	0.0	-45.46	-26.95	1.22	0.0
47	6	0.0	0.0	-45.46	-26.95	1.22	0.0
47	7	0.0	0.0	-45.46	-26.95	1.22	0.0
47	8	0.0	0.0	-45.46	-26.95	1.22	0.0
47	9	0.0	0.0	-59.10	-35.03	1.58	0.0
47	10	0.0	0.0	-59.10	-35.03	1.58	0.0
47	11	0.0	0.0	-59.10	-35.03	1.58	0.0
47	12	0.0	0.0	-45.46	-26.95	1.22	0.0
47	13	0.0	0.0	-45.46	-26.95	1.22	0.0
47	14	0.0	0.0	-45.46	-26.95	1.22	0.0
47	15	0.0	0.0	-45.46	-26.95	1.22	0.0
47	16	0.0	0.0	-45.46	-26.95	1.22	0.0
47	17	0.0	0.0	-45.46	-26.95	1.22	0.0
47	18	0.0	0.0	-45.46	-26.95	1.22	0.0
47	19	0.0	0.0	-45.46	-26.95	1.22	0.0
47	20	0.0	0.0	-45.46	-26.95	1.22	0.0
47	21	0.0	0.0	-45.46	-26.95	1.22	0.0
47	22	0.0	0.0	-45.46	-26.95	1.22	0.0
47	23	0.0	0.0	-45.46	-26.95	1.22	0.0
47	24	0.0	0.0	-45.46	-26.95	1.22	0.0
47	25	0.0	0.0	-45.46	-26.95	1.22	0.0
47	26	0.0	0.0	-45.46	-26.95	1.22	0.0
47	27	0.0	0.0	-45.46	-26.95	1.22	0.0
47	28	0.0	0.0	-45.46	-26.95	1.22	0.0
47	29	0.0	0.0	-45.46	-26.95	1.22	0.0
47	30	0.0	0.0	-45.46	-26.95	1.22	0.0
47	31	0.0	0.0	-45.46	-26.95	1.22	0.0
47	32	0.0	0.0	-45.46	-26.95	1.22	0.0
47	33	0.0	0.0	-45.46	-26.95	1.22	0.0
47	34	0.0	0.0	-45.46	-26.95	1.22	0.0
47	35	0.0	0.0	-45.46	-26.95	1.22	0.0
47	36	0.0	0.0	-45.46	-26.95	1.22	0.0
47	37	0.0	0.0	-45.46	-26.95	1.22	0.0
47	38	0.0	0.0	-45.46	-26.95	1.22	0.0
47	39	0.0	0.0	-45.46	-26.95	1.22	0.0
47	40	0.0	0.0	-45.46	-26.95	1.22	0.0
47	41	0.0	0.0	-45.46	-26.95	1.22	0.0
47	42	0.0	0.0	-45.46	-26.95	1.22	0.0
47	43	0.0	0.0	-45.46	-26.95	1.22	0.0
47	44	0.0	0.0	-45.46	-26.95	1.22	0.0
47	45	0.0	0.0	-45.46	-26.95	1.22	0.0
47	46	0.0	0.0	-45.46	-26.95	1.22	0.0
47	47	0.0	0.0	-45.46	-26.95	1.22	0.0
47	48	0.0	0.0	-45.46	-26.95	1.22	0.0
47	49	0.0	0.0	-45.46	-26.95	1.22	0.0
47	50	0.0	0.0	-45.46	-26.95	1.22	0.0
51	1	-2.91	-0.11	-216.83	-38.48	-11.08	1.50
51	2	-2.91	-0.13	-216.83	-38.46	-11.07	1.51
51	3	-4.19	0.15	-242.78	-45.11	-17.79	1.97
51	4	-4.19	0.14	-242.78	-45.10	-17.78	1.98
51	5	-2.00	-0.10	-161.49	-28.31	-7.09	1.07
51	6	-2.00	-0.12	-161.49	-28.29	-7.08	1.07
51	7	-3.28	0.16	-187.44	-34.94	-13.80	1.54
51	8	-3.28	0.15	-187.44	-34.92	-13.79	1.54
51	9	-2.91	-0.14	-216.82	-38.44	-11.07	1.51
51	10	-3.81	0.07	-235.00	-43.12	-15.78	1.83
51	11	-3.81	0.04	-234.99	-43.09	-15.76	1.84
51	12	-2.00	-0.13	-161.48	-28.27	-7.08	1.08
51	13	-2.89	0.08	-179.66	-32.95	-11.79	1.40
51	14	-2.89	0.05	-179.65	-32.92	-11.77	1.41
51	15	3.85	4.56	-174.80	-43.18	15.65	-1.42
51	16	4.35	-0.54	-172.43	-29.06	17.58	-0.02
51	17	-9.37	0.55	-171.31	-32.86	-37.13	2.53
51	18	-8.87	-4.55	-168.95	-18.74	-35.20	3.93
51	19	3.67	5.57	-175.16	-45.85	14.95	-1.63
51	20	4.54	-1.55	-172.07	-26.38	18.28	0.19
51	21	-9.56	1.56	-171.68	-35.54	-37.83	2.32
51	22	-8.69	-5.56	-168.58	-16.07	-34.50	4.14
51	23	4.27	7.09	-175.62	-49.96	16.58	-3.25
51	24	4.77	1.98	-173.26	-35.84	18.51	-1.85
51	25	-9.79	-1.98	-170.49	-26.08	-38.06	4.36
51	26	-9.29	-7.08	-168.12	-11.96	-36.12	5.76
51	27	4.08	8.10	-175.98	-52.63	15.88	-3.46
51	28	4.95	0.98	-172.89	-33.16	19.21	-1.64

51	29	-9.97	-0.97	-170.85	-28.76	-38.75	4.15
51	30	-9.10	-8.09	-167.76	-9.29	-35.43	5.97
51	31	-1.36	9.12	-176.33	-56.04	-5.08	-1.67
51	32	0.30	-7.91	-168.46	-8.98	1.36	3.00
51	33	-5.32	7.91	-175.29	-52.94	-20.91	-0.49
51	34	-3.66	-9.11	-167.41	-5.88	-14.47	4.18
51	35	-1.23	9.88	-176.58	-58.07	-4.80	-2.22
51	36	0.43	-7.15	-168.70	-11.01	1.64	2.45
51	37	-5.45	7.16	-175.04	-50.91	-21.19	0.06
51	38	-3.79	-9.87	-167.16	-3.85	-14.75	4.73
51	39	-1.98	12.48	-177.55	-64.96	-7.40	-2.37
51	40	0.93	-11.27	-167.24	-0.06	3.69	3.69
51	41	-5.95	11.28	-176.50	-61.86	-23.24	-1.18
51	42	-3.04	-12.47	-166.20	3.04	-12.15	4.88
51	43	-1.85	13.24	-177.79	-66.99	-7.12	-2.92
51	44	1.05	-10.51	-167.49	-2.09	3.97	3.14
51	45	-6.07	10.52	-176.25	-59.83	-23.51	-0.63
51	46	-3.17	-13.23	-165.95	5.07	-12.42	5.43
51	47	-12.65	-5.28	-168.51	-16.94	-49.70	5.82
51	48	7.62	5.29	-175.23	-44.98	30.15	-3.31
51	49	-1.32	-15.94	-164.74	12.86	-5.41	5.24
51	50	-3.70	15.95	-179.01	-74.78	-14.14	-2.73
52	1	-2.09	22.28	-381.27	-68.23	-72.34	0.95
52	2	-2.09	22.31	-381.38	-68.24	-72.35	0.95
52	3	-3.02	26.91	-414.13	-75.19	-78.99	1.27
52	4	-3.02	26.95	-414.24	-75.20	-79.00	1.27
52	5	-1.41	16.25	-283.62	-50.42	-53.45	0.67
52	6	-1.41	16.28	-283.74	-50.43	-53.46	0.68
52	7	-2.33	20.88	-316.48	-57.38	-60.10	0.99
52	8	-2.33	20.91	-316.60	-57.40	-60.11	1.00
52	9	-2.09	22.35	-381.50	-68.25	-72.36	0.96
52	10	-2.74	25.52	-404.27	-73.10	-77.00	1.17
52	11	-2.74	25.59	-404.50	-73.13	-77.02	1.18
52	12	-1.41	16.32	-283.85	-50.45	-53.47	0.68
52	13	-2.06	19.49	-306.62	-55.29	-58.10	0.89
52	14	-2.06	19.56	-306.85	-55.32	-58.12	0.91
52	15	9.91	52.29	-350.12	-58.78	-22.50	-0.98
52	16	7.83	12.77	-283.46	-41.74	-18.80	-1.73
52	17	-11.39	23.43	-310.07	-64.67	-93.42	3.33
52	18	-13.47	-16.10	-243.41	-47.63	-89.72	2.58
52	19	9.71	58.71	-359.94	-61.56	-22.60	-1.08
52	20	8.03	6.35	-273.65	-38.96	-18.69	-1.63
52	21	-11.59	29.85	-319.88	-67.45	-93.53	3.23
52	22	-13.27	-22.52	-233.60	-44.85	-89.61	2.68
52	23	10.42	57.77	-362.22	-67.84	-23.32	-1.26
52	24	8.34	18.24	-295.56	-50.80	-19.63	-2.01
52	25	-11.90	17.95	-297.97	-55.61	-92.59	3.61
52	26	-13.98	-21.57	-231.31	-38.57	-88.89	2.86
52	27	10.22	64.19	-372.03	-70.62	-23.43	-1.36
52	28	8.54	11.82	-285.75	-48.02	-19.52	-1.91
52	29	-12.10	24.37	-307.78	-58.39	-92.70	3.51
52	30	-13.78	-27.99	-221.50	-35.79	-88.79	2.96
52	31	4.89	88.31	-413.87	-80.73	-51.63	1.41
52	32	-2.06	-43.45	-191.68	-23.91	-39.31	-1.10
52	33	-1.50	79.65	-401.86	-82.50	-72.91	2.70
52	34	-8.45	-52.11	-179.66	-25.68	-60.59	0.19
52	35	5.04	89.95	-417.50	-83.45	-51.88	1.32
52	36	-1.91	-41.81	-195.31	-26.63	-39.56	-1.18
52	37	-1.65	78.00	-398.23	-79.78	-72.66	2.78
52	38	-8.60	-53.75	-176.03	-22.96	-60.34	0.28
52	39	4.22	109.71	-446.58	-89.99	-51.99	1.07
52	40	-1.39	-64.85	-158.96	-14.65	-38.95	-0.77
52	41	-2.17	101.05	-434.57	-91.76	-73.27	2.36
52	42	-7.78	-73.51	-146.95	-16.41	-60.23	0.53
52	43	4.37	111.35	-450.21	-92.71	-52.24	0.99
52	44	-1.23	-63.21	-162.59	-17.37	-39.20	-0.85
52	45	-2.32	99.40	-430.94	-89.04	-73.02	2.45
52	46	-7.93	-75.15	-143.32	-13.70	-59.98	0.61
52	47	-15.68	-8.63	-255.34	-46.36	-105.42	3.39
52	48	12.12	44.83	-338.19	-60.05	-6.79	-1.79
52	49	-6.09	-103.15	-94.95	-0.96	-51.38	-0.69
52	50	2.53	139.35	-498.58	-105.44	-60.84	2.29
53	1	-2.35	-0.18	-220.26	-16.06	27.84	0.61
53	2	-2.35	-0.18	-220.24	-16.05	27.84	0.61
53	3	-2.82	-0.04	-240.69	-21.43	32.19	0.93
53	4	-2.82	-0.04	-240.68	-21.43	32.18	0.93
53	5	-1.72	-0.11	-165.31	-11.39	20.53	0.45

53	6	-1.72	-0.11	-165.29	-11.38	20.53	0.44
53	7	-2.19	0.03	-185.74	-16.76	24.87	0.77
53	8	-2.19	0.03	-185.73	-16.75	24.87	0.77
53	9	-2.35	-0.19	-220.23	-16.04	27.84	0.61
53	10	-2.68	-0.08	-234.56	-19.82	30.88	0.84
53	11	-2.68	-0.09	-234.53	-19.80	30.88	0.83
53	12	-1.72	-0.11	-165.28	-11.37	20.52	0.44
53	13	-2.05	-0.01	-179.61	-15.15	23.57	0.67
53	14	-2.05	-0.02	-179.59	-15.13	23.57	0.67
53	15	-2.34	-0.63	-182.89	-16.23	24.23	0.48
53	16	-2.38	-0.39	-179.95	-12.28	23.87	-0.60
53	17	-1.43	0.28	-167.01	-14.79	20.66	1.75
53	18	-1.47	0.53	-164.07	-10.84	20.31	0.67
53	19	-2.33	-0.60	-182.24	-15.70	24.14	0.36
53	20	-2.39	-0.41	-180.60	-12.81	23.96	-0.48
53	21	-1.42	0.31	-166.37	-14.26	20.57	1.63
53	22	-1.48	0.50	-164.72	-11.37	20.40	0.79
53	23	-2.26	-0.73	-181.84	-17.56	24.10	0.06
53	24	-2.30	-0.49	-178.90	-13.61	23.75	-1.02
53	25	-1.51	0.39	-168.06	-13.46	20.79	2.17
53	26	-1.55	0.63	-165.12	-9.51	20.43	1.09
53	27	-2.25	-0.71	-181.19	-17.03	24.02	-0.06
53	28	-2.31	-0.51	-179.55	-14.14	23.84	-0.90
53	29	-1.50	0.41	-167.41	-12.93	20.70	2.05
53	30	-1.56	0.61	-165.77	-10.04	20.52	1.21
53	31	-1.97	-0.59	-180.77	-20.33	23.39	2.18
53	32	-2.12	0.22	-170.96	-7.17	22.21	-1.41
53	33	-1.70	-0.32	-176.00	-19.90	22.32	2.56
53	34	-1.85	0.49	-166.20	-6.74	21.14	-1.03
53	35	-1.94	-0.62	-180.45	-20.73	23.36	2.05
53	36	-2.09	0.18	-170.65	-7.57	22.17	-1.54
53	37	-1.72	-0.29	-176.32	-19.50	22.36	2.69
53	38	-1.87	0.52	-166.51	-6.34	21.18	-0.90
53	39	-1.94	-0.51	-178.60	-18.57	23.10	1.78
53	40	-2.14	0.14	-173.13	-8.93	22.51	-1.01
53	41	-1.67	-0.24	-173.84	-18.14	22.03	2.16
53	42	-1.87	0.41	-168.36	-8.50	21.44	-0.63
53	43	-1.92	-0.54	-178.29	-18.97	23.06	1.65
53	44	-2.12	0.10	-172.81	-9.33	22.47	-1.14
53	45	-1.69	-0.21	-174.15	-17.74	22.06	2.29
53	46	-1.89	0.44	-168.68	-8.10	21.48	-0.50
53	47	-1.29	0.54	-163.11	-11.48	19.84	1.89
53	48	-2.53	-0.64	-183.86	-15.59	24.70	-0.74
53	49	-2.00	0.52	-167.61	-4.47	21.66	-1.96
53	50	-1.82	-0.62	-179.35	-22.61	22.87	3.11
55	1	3.13	23.50	-393.89	-67.18	17.78	1.50
55	2	3.13	23.53	-394.02	-67.19	17.78	1.49
55	3	4.07	28.54	-424.91	-73.69	18.52	2.35
55	4	4.07	28.58	-425.04	-73.70	18.53	2.34
55	5	2.27	17.13	-293.60	-49.71	14.31	1.03
55	6	2.27	17.16	-293.73	-49.72	14.31	1.02
55	7	3.21	22.17	-324.62	-56.22	15.05	1.88
55	8	3.21	22.21	-324.75	-56.24	15.06	1.87
55	9	3.13	23.57	-394.15	-67.20	17.78	1.49
55	10	3.79	27.03	-415.61	-71.73	18.30	2.09
55	11	3.79	27.10	-415.86	-71.76	18.31	2.08
55	12	2.28	17.20	-293.86	-49.74	14.32	1.02
55	13	2.93	20.66	-315.32	-54.27	14.83	1.62
55	14	2.93	20.73	-315.57	-54.30	14.84	1.61
55	15	18.90	54.41	-337.25	-62.32	38.87	2.40
55	16	16.22	-3.30	-252.70	-34.48	55.01	-7.01
55	17	-10.93	41.59	-359.32	-70.16	-25.79	9.74
55	18	-13.60	-16.13	-274.77	-42.32	-9.65	0.34
55	19	18.15	47.90	-328.41	-59.38	39.74	1.25
55	20	16.97	3.21	-261.53	-37.41	54.13	-5.86
55	21	-11.68	35.07	-350.49	-67.23	-24.92	8.59
55	22	-12.85	-9.61	-283.61	-45.25	-10.53	1.49
55	23	18.81	61.08	-324.63	-55.69	43.49	-1.64
55	24	16.13	3.36	-240.08	-27.85	59.63	-11.05
55	25	-10.83	34.93	-371.94	-76.78	-30.41	13.79
55	26	-13.51	-22.79	-287.39	-48.94	-14.27	4.38
55	27	18.05	54.56	-315.79	-52.76	44.36	-2.79
55	28	16.88	9.88	-248.91	-30.78	58.75	-9.90
55	29	-11.58	28.41	-363.11	-73.85	-29.54	12.63
55	30	-12.76	-16.27	-296.23	-51.88	-15.15	5.53
55	31	11.59	117.26	-443.62	-97.54	-2.59	15.95
55	32	2.66	-75.13	-161.78	-4.74	51.21	-15.41

55	33	2.64	113.41	-450.24	-99.89	-21.99	18.15
55	34	-6.29	-78.97	-168.40	-7.10	31.81	-13.21
55	35	11.56	119.26	-439.83	-95.55	-1.21	14.73
55	36	2.63	-73.13	-158.00	-2.76	52.59	-16.63
55	37	2.67	111.41	-454.02	-101.88	-23.38	19.36
55	38	-6.26	-80.97	-172.19	-9.08	30.42	-12.00
55	39	9.08	95.54	-414.17	-87.76	0.32	12.11
55	40	5.16	-53.41	-191.23	-14.52	48.29	-11.58
55	41	0.13	91.69	-420.79	-90.12	-19.07	14.31
55	42	-3.78	-57.25	-197.85	-16.87	28.89	-9.37
55	43	9.05	97.54	-410.38	-85.78	1.71	10.90
55	44	5.13	-51.41	-187.45	-12.53	49.67	-12.79
55	45	0.16	89.70	-424.57	-92.10	-20.46	15.53
55	46	-3.76	-59.25	-201.64	-18.86	27.50	-8.16
55	47	-19.26	7.49	-330.03	-63.96	-35.70	10.27
55	48	24.56	30.80	-281.99	-40.68	64.92	-7.53
55	49	-1.41	-117.28	-104.29	14.00	54.33	-20.49
55	50	6.71	155.57	-507.73	-118.64	-25.12	23.23
59	1	-2.33	-0.57	-221.44	-43.18	28.16	0.33
59	2	-2.33	-0.58	-221.44	-43.18	28.16	0.33
59	3	-2.74	-0.85	-241.79	-47.81	32.58	0.37
59	4	-2.74	-0.86	-241.79	-47.80	32.58	0.37
59	5	-1.70	-0.38	-166.21	-32.30	20.76	0.25
59	6	-1.70	-0.38	-166.21	-32.29	20.76	0.25
59	7	-2.12	-0.66	-186.56	-36.92	25.18	0.29
59	8	-2.12	-0.66	-186.55	-36.91	25.18	0.29
59	9	-2.33	-0.58	-221.44	-43.17	28.16	0.33
59	10	-2.62	-0.77	-235.69	-46.42	31.25	0.36
59	11	-2.62	-0.78	-235.69	-46.41	31.25	0.36
59	12	-1.70	-0.39	-166.20	-32.28	20.76	0.25
59	13	-2.00	-0.58	-180.45	-35.53	23.86	0.28
59	14	-2.00	-0.58	-180.45	-35.52	23.86	0.28
59	15	-2.58	-0.02	-186.22	-38.43	24.79	0.34
59	16	-2.46	0.21	-177.62	-33.02	23.25	-0.82
59	17	-1.28	-1.19	-171.08	-35.27	21.81	1.35
59	18	-1.16	-0.96	-162.47	-29.86	20.27	0.19
59	19	-2.55	-0.03	-184.92	-37.71	24.56	0.20
59	20	-2.49	0.21	-178.92	-33.74	23.48	-0.67
59	21	-1.25	-1.20	-169.78	-34.55	21.58	1.21
59	22	-1.19	-0.96	-163.77	-30.58	20.50	0.34
59	23	-2.55	0.03	-185.34	-39.92	24.63	-0.24
59	24	-2.42	0.26	-176.73	-34.51	23.09	-1.40
59	25	-1.32	-1.25	-171.96	-33.78	21.98	1.94
59	26	-1.19	-1.02	-163.35	-28.37	20.43	0.78
59	27	-2.52	0.03	-184.04	-39.20	24.39	-0.39
59	28	-2.45	0.27	-178.04	-35.23	23.32	-1.26
59	29	-1.29	-1.25	-170.66	-33.06	21.74	1.79
59	30	-1.22	-1.01	-164.65	-29.09	20.67	0.92
59	31	-2.28	-0.70	-190.97	-43.63	25.55	2.05
59	32	-1.85	0.07	-162.27	-25.61	20.41	-1.82
59	33	-1.89	-1.05	-186.42	-42.68	24.66	2.36
59	34	-1.46	-0.28	-157.73	-24.66	19.51	-1.52
59	35	-2.27	-0.69	-190.70	-44.08	25.50	1.88
59	36	-1.84	0.09	-162.01	-26.06	20.36	-2.00
59	37	-1.90	-1.07	-186.69	-42.23	24.71	2.53
59	38	-1.47	-0.30	-157.99	-24.21	19.56	-1.34
59	39	-2.18	-0.72	-186.63	-41.24	24.77	1.56
59	40	-1.95	0.08	-166.61	-28.00	21.19	-1.33
59	41	-1.79	-1.07	-182.08	-40.29	23.87	1.86
59	42	-1.56	-0.27	-162.07	-27.05	20.29	-1.03
59	43	-2.17	-0.70	-186.36	-41.68	24.72	1.38
59	44	-1.94	0.10	-166.35	-28.45	21.14	-1.50
59	45	-1.80	-1.08	-182.35	-39.84	23.92	2.04
59	46	-1.57	-0.29	-162.33	-26.61	20.34	-0.85
59	47	-1.01	-1.14	-164.83	-31.18	20.55	1.48
59	48	-2.73	0.15	-183.87	-37.11	24.51	-0.95
59	49	-1.65	0.11	-154.94	-21.70	19.05	-2.41
59	50	-2.09	-1.09	-193.76	-46.59	26.01	2.95
65	1	-15.29	-42.11	-454.05	-168.81	-4.79	1.15
65	2	-15.41	-42.94	-455.32	-169.61	-4.90	1.19
65	3	-18.98	-43.77	-503.90	-193.39	-4.41	-1.65e-03
65	4	-19.09	-44.59	-505.17	-194.20	-4.52	0.04
65	5	-11.25	-31.59	-340.93	-125.84	-3.24	0.94
65	6	-11.36	-32.41	-342.20	-126.64	-3.35	0.97
65	7	-14.94	-33.24	-390.78	-150.43	-2.86	-0.21
65	8	-15.05	-34.07	-392.05	-151.23	-2.97	-0.17
65	9	-15.52	-43.76	-456.59	-170.41	-5.01	1.22

65	10	-17.87	-43.27	-488.95	-186.02	-4.52	0.34
65	11	-18.10	-44.92	-491.49	-187.62	-4.74	0.42
65	12	-11.48	-33.24	-343.47	-127.45	-3.46	1.01
65	13	-13.83	-32.75	-375.83	-143.05	-2.98	0.13
65	14	-14.06	-34.40	-378.37	-144.66	-3.20	0.21
65	15	115.70	285.05	-302.38	-114.70	45.15	3.40
65	16	145.71	225.50	-340.95	-105.87	33.32	5.52
65	17	-171.17	-290.00	-380.79	-165.48	-39.50	-4.57
65	18	-141.15	-349.54	-419.37	-156.65	-51.33	-2.45
65	19	121.90	299.39	-296.46	-114.92	45.79	3.60
65	20	139.51	211.16	-346.87	-105.66	32.68	5.33
65	21	-164.96	-275.66	-374.87	-165.70	-38.86	-4.38
65	22	-147.36	-363.88	-425.29	-156.44	-51.97	-2.64
65	23	167.27	418.29	-282.11	-109.24	57.93	4.38
65	24	197.28	358.74	-320.69	-100.41	46.10	6.49
65	25	-222.73	-423.24	-401.06	-170.95	-52.28	-5.54
65	26	-192.72	-482.78	-439.63	-162.12	-64.11	-3.43
65	27	173.47	432.63	-276.19	-109.45	58.57	4.57
65	28	191.08	344.40	-326.61	-100.20	45.46	6.30
65	29	-216.53	-408.90	-395.14	-171.16	-51.64	-5.35
65	30	-198.92	-497.12	-445.55	-161.90	-64.75	-3.62
65	31	-19.72	153.25	-284.82	-142.77	29.33	-1.85
65	32	80.32	-45.23	-413.40	-113.35	-10.12	5.20
65	33	-105.78	-19.27	-308.34	-158.01	3.94	-4.24
65	34	-5.74	-217.74	-436.92	-128.58	-35.52	2.81
65	35	-4.25	193.22	-278.74	-141.13	33.17	-1.56
65	36	95.79	-5.26	-407.32	-111.71	-6.29	5.49
65	37	-121.25	-59.24	-314.42	-159.64	0.11	-4.54
65	38	-21.21	-257.72	-443.00	-130.22	-39.35	2.51
65	39	0.96	201.05	-265.09	-143.49	31.46	-1.22
65	40	59.65	-93.03	-433.13	-112.63	-12.25	4.56
65	41	-85.10	28.53	-288.61	-158.72	6.07	-3.61
65	42	-26.41	-265.55	-456.66	-127.87	-37.64	2.17
65	43	16.43	241.02	-259.01	-141.85	35.30	-0.92
65	44	75.12	-53.06	-427.05	-110.99	-8.41	4.85
65	45	-100.57	-11.44	-294.69	-160.36	2.23	-3.90
65	46	-41.88	-305.52	-462.73	-129.51	-41.48	1.88
65	47	-281.78	-600.56	-440.80	-179.97	-80.37	-6.55
65	48	256.33	536.06	-280.94	-91.39	74.19	7.50
65	49	32.94	-172.64	-476.71	-112.33	-33.64	5.51
65	50	-58.39	108.14	-245.03	-159.03	27.46	-4.56
66	1	-19.68	-0.07	-406.55	82.23	-51.52	-0.58
66	2	-19.76	-0.08	-406.63	82.23	-51.53	-0.58
66	3	-20.96	-8.46e-03	-464.53	89.97	-60.66	-0.86
66	4	-21.04	-0.02	-464.60	89.98	-60.67	-0.86
66	5	-14.40	-0.05	-301.40	61.39	-37.62	-0.41
66	6	-14.49	-0.06	-301.48	61.39	-37.63	-0.41
66	7	-15.68	8.54e-03	-359.38	69.13	-46.75	-0.69
66	8	-15.77	-1.39e-03	-359.45	69.14	-46.76	-0.69
66	9	-19.85	-0.09	-406.70	82.23	-51.54	-0.58
66	10	-20.57	-0.03	-447.13	87.65	-57.92	-0.77
66	11	-20.75	-0.05	-447.29	87.66	-57.94	-0.77
66	12	-14.57	-0.07	-301.56	61.39	-37.64	-0.41
66	13	-15.30	-0.01	-341.99	66.81	-44.01	-0.61
66	14	-15.47	-0.03	-342.14	66.82	-44.03	-0.61
66	15	105.77	3.26	-152.23	40.75	6.49	1.77
66	16	94.45	-0.96	-135.48	50.36	10.83	2.18
66	17	-124.27	0.90	-513.70	78.61	-93.38	-3.22
66	18	-135.59	-3.32	-496.96	88.22	-89.03	-2.82
66	19	104.50	3.99	-153.65	38.89	6.27	1.48
66	20	95.72	-1.69	-134.06	52.22	11.05	2.47
66	21	-125.54	1.63	-515.13	76.75	-93.59	-3.51
66	22	-134.32	-4.05	-495.53	90.08	-88.81	-2.53
66	23	129.30	4.12	-140.04	41.02	11.11	1.58
66	24	117.98	-0.10	-123.29	50.62	15.46	1.99
66	25	-147.81	0.04	-525.89	78.35	-98.00	-3.03
66	26	-159.12	-4.18	-509.15	87.95	-93.65	-2.62
66	27	128.03	4.85	-141.46	39.15	10.89	1.29
66	28	119.25	-0.83	-121.87	52.48	15.67	2.28
66	29	-149.07	0.77	-527.32	76.49	-98.21	-3.32
66	30	-157.86	-4.91	-507.72	89.82	-93.44	-2.33
66	31	38.45	7.36	-298.28	42.80	-33.54	-0.45
66	32	0.74	-6.71	-242.47	74.81	-19.05	0.90
66	33	-30.56	6.65	-406.72	54.16	-63.50	-1.95
66	34	-68.27	-7.41	-350.91	86.17	-49.01	-0.59
66	35	45.51	7.62	-294.62	42.88	-32.15	-0.51
66	36	7.80	-6.45	-238.81	74.89	-17.66	0.85

66	37	-37.62	6.39	-410.37	54.08	-64.88	-1.89
66	38	-75.33	-7.67	-354.57	86.09	-50.39	-0.54
66	39	34.24	9.79	-303.03	36.59	-34.25	-1.42
66	40	4.95	-9.14	-237.71	81.02	-18.33	1.87
66	41	-34.77	9.08	-411.48	47.94	-64.21	-2.92
66	42	-64.06	-9.85	-346.15	92.38	-48.29	0.37
66	43	41.30	10.05	-299.38	36.67	-32.87	-1.48
66	44	12.01	-8.88	-234.05	81.10	-16.94	1.81
66	45	-41.83	8.83	-415.13	47.87	-65.60	-2.86
66	46	-71.12	-10.11	-349.81	92.30	-49.67	0.43
66	47	-214.21	-2.56	-618.22	93.69	-123.47	-4.16
66	48	184.38	2.50	-30.97	35.27	40.92	3.12
66	49	-19.92	-13.06	-290.71	94.59	-34.00	1.14
66	50	-9.90	13.01	-358.47	34.38	-48.55	-2.18
67	1	-24.85	-16.93	-457.13	-9.90	-73.24	0.49
67	2	-25.07	-17.59	-458.06	-10.29	-73.44	0.44
67	3	-30.69	-18.43	-498.51	-21.54	-77.12	2.36
67	4	-30.91	-19.09	-499.45	-21.92	-77.31	2.31
67	5	-18.27	-12.23	-337.61	-7.78	-53.78	0.25
67	6	-18.49	-12.90	-338.54	-8.17	-53.97	0.20
67	7	-24.11	-13.73	-378.99	-19.42	-57.65	2.12
67	8	-24.33	-14.39	-379.93	-19.80	-57.84	2.07
67	9	-25.29	-18.26	-459.00	-10.67	-73.63	0.39
67	10	-28.94	-17.98	-486.10	-18.05	-75.95	1.80
67	11	-29.38	-19.30	-487.97	-18.82	-76.34	1.70
67	12	-18.71	-13.56	-339.48	-8.55	-54.16	0.15
67	13	-22.36	-13.28	-366.58	-15.93	-56.49	1.56
67	14	-22.80	-14.61	-368.45	-16.70	-56.87	1.46
67	15	226.77	87.39	-332.02	-30.30	-14.78	2.80
67	16	285.07	-22.13	-360.49	-4.31	-23.04	4.44
67	17	-326.28	-3.53	-347.84	-20.56	-87.62	-2.44
67	18	-267.98	-113.06	-376.31	5.43	-95.87	-0.80
67	19	238.26	98.84	-330.26	-31.70	-15.24	2.27
67	20	273.58	-33.58	-362.24	-2.90	-22.58	4.96
67	21	-314.79	7.92	-346.08	-21.97	-88.07	-2.96
67	22	-279.47	-124.50	-378.06	6.83	-95.41	-0.27
67	23	324.00	118.53	-327.72	-33.40	-6.74	2.69
67	24	382.30	9.00	-356.19	-7.42	-15.00	4.33
67	25	-423.52	-34.67	-352.13	-17.45	-95.65	-2.33
67	26	-365.21	-144.19	-380.61	8.54	-103.91	-0.69
67	27	335.49	129.98	-325.96	-34.81	-7.20	2.16
67	28	370.81	-2.44	-357.95	-6.01	-14.54	4.85
67	29	-412.03	-23.22	-350.38	-18.86	-96.11	-2.85
67	30	-376.70	-155.64	-382.36	9.94	-103.45	-0.16
67	31	-34.82	183.36	-304.34	-57.21	-30.64	-0.95
67	32	159.52	-181.74	-399.24	29.42	-58.16	4.52
67	33	-200.73	156.08	-309.08	-54.29	-52.49	-2.52
67	34	-6.39	-209.02	-403.99	32.34	-80.01	2.95
67	35	-5.65	192.70	-303.05	-58.14	-28.23	-0.98
67	36	188.69	-172.40	-397.95	28.49	-55.75	4.48
67	37	-229.90	146.74	-310.37	-53.36	-54.90	-2.49
67	38	-35.56	-218.36	-405.28	33.27	-82.42	2.98
67	39	3.48	221.51	-298.49	-61.90	-32.17	-2.70
67	40	121.23	-219.90	-405.09	34.12	-56.63	6.27
67	41	-162.44	194.23	-303.23	-58.99	-54.02	-4.27
67	42	-44.69	-247.17	-409.84	37.04	-78.48	4.70
67	43	32.65	230.85	-297.20	-62.84	-29.76	-2.73
67	44	150.39	-210.56	-403.80	33.18	-54.22	6.23
67	45	-191.61	184.89	-304.52	-58.05	-56.43	-4.24
67	46	-73.86	-256.51	-411.13	37.97	-80.89	4.73
67	47	-537.39	-112.11	-370.06	-2.09	-118.99	-2.82
67	48	496.18	86.45	-338.27	-22.78	8.34	4.82
67	49	72.28	-331.41	-434.12	60.14	-74.15	6.64
67	50	-113.49	305.75	-274.20	-85.01	-36.50	-4.64
68	1	-4.20	-17.23	-357.70	-25.57	67.40	-2.91
68	2	-4.22	-17.33	-358.74	-25.74	67.63	-2.93
68	3	-4.63	-19.38	-391.29	-31.96	74.84	-3.27
68	4	-4.64	-19.49	-392.33	-32.12	75.07	-3.30
68	5	-3.15	-12.89	-269.41	-18.58	50.58	-2.18
68	6	-3.16	-13.00	-270.44	-18.74	50.81	-2.20
68	7	-3.58	-15.05	-302.99	-24.96	58.02	-2.54
68	8	-3.59	-15.16	-304.03	-25.13	58.25	-2.56
68	9	-4.23	-17.43	-359.78	-25.90	67.86	-2.96
68	10	-4.50	-18.74	-381.21	-30.04	72.61	-3.17
68	11	-4.53	-18.94	-383.29	-30.37	73.07	-3.21
68	12	-3.18	-13.10	-271.48	-18.91	51.04	-2.22
68	13	-3.45	-14.40	-292.92	-23.05	55.79	-2.43

68	14	-3.48	-14.61	-294.99	-23.38	56.25	-2.48
68	15	-2.40	-26.30	-307.80	-14.02	60.57	-6.80
68	16	-3.50	-30.64	-347.33	-17.64	69.11	-8.65
68	17	-3.13	3.13	-218.35	-24.63	38.01	4.00
68	18	-4.23	-1.21	-257.88	-28.25	46.55	2.15
68	19	-2.44	-27.32	-311.36	-13.66	61.41	-7.22
68	20	-3.47	-29.62	-343.77	-18.00	68.28	-8.22
68	21	-3.17	2.11	-221.91	-24.27	38.84	3.58
68	22	-4.20	-0.19	-254.32	-28.61	45.71	2.57
68	23	-2.37	-32.22	-327.04	-11.71	65.29	-9.10
68	24	-3.47	-36.56	-366.57	-15.33	73.84	-10.95
68	25	-3.17	9.05	-199.11	-26.93	33.28	6.30
68	26	-4.27	4.70	-238.63	-30.56	41.83	4.45
68	27	-2.40	-33.24	-330.60	-11.35	66.13	-9.52
68	28	-3.43	-35.54	-363.01	-15.69	73.00	-10.52
68	29	-3.20	8.03	-202.67	-26.57	34.12	5.88
68	30	-4.23	5.72	-235.08	-30.92	40.99	4.87
68	31	-1.38	-10.94	-230.39	-13.50	42.71	-0.86
68	32	-5.04	-25.41	-362.13	-25.58	71.18	-7.02
68	33	-1.60	-2.11	-203.55	-16.68	35.94	2.38
68	34	-5.26	-16.58	-335.29	-28.77	64.41	-3.79
68	35	-1.37	-12.71	-236.16	-12.81	44.12	-1.55
68	36	-5.03	-27.18	-367.90	-24.89	72.60	-7.71
68	37	-1.61	-0.33	-197.78	-17.38	34.52	3.07
68	38	-5.27	-14.80	-329.52	-29.46	63.00	-3.10
68	39	-1.49	-14.34	-242.24	-12.30	45.50	-2.26
68	40	-4.92	-22.01	-350.28	-26.78	68.39	-5.62
68	41	-1.71	-5.51	-215.40	-15.49	38.73	0.98
68	42	-5.14	-13.18	-323.44	-29.96	61.62	-2.38
68	43	-1.48	-16.11	-248.01	-11.61	46.92	-2.95
68	44	-4.91	-23.78	-356.05	-26.09	69.80	-6.31
68	45	-1.72	-3.73	-209.63	-16.18	37.31	1.67
68	46	-5.15	-11.40	-317.67	-30.65	60.20	-1.69
68	47	-3.88	14.48	-195.60	-31.38	31.68	8.15
68	48	-2.76	-42.00	-370.08	-10.88	75.44	-12.80
68	49	-6.15	-21.10	-377.61	-31.43	73.78	-5.64
68	50	-0.49	-6.41	-188.07	-10.84	33.34	0.99
70	1	27.30	-2.72	-459.87	72.51	-71.63	0.02
70	2	27.38	-2.73	-460.03	72.53	-71.66	0.02
70	3	31.42	-3.79	-509.65	78.53	-76.90	-0.04
70	4	31.50	-3.80	-509.80	78.55	-76.92	-0.04
70	5	19.92	-1.90	-336.67	52.54	-51.99	2.26e-03
70	6	20.00	-1.92	-336.82	52.56	-52.02	3.23e-03
70	7	24.04	-2.97	-386.44	58.56	-57.25	-0.06
70	8	24.12	-2.99	-386.59	58.58	-57.28	-0.06
70	9	27.46	-2.74	-460.18	72.56	-71.68	0.02
70	10	30.19	-3.47	-494.71	76.72	-75.32	-0.03
70	11	30.34	-3.49	-495.02	76.77	-75.37	-0.02
70	12	20.07	-1.93	-336.97	52.58	-52.04	4.20e-03
70	13	22.81	-2.65	-371.51	56.75	-55.67	-0.04
70	14	22.96	-2.68	-371.82	56.80	-55.72	-0.04
70	15	141.75	-1.34	-529.26	63.11	-31.98	1.46
70	16	153.89	-5.83	-543.95	77.84	-34.86	2.33
70	17	-110.75	1.17	-169.20	32.05	-73.33	-2.38
70	18	-98.62	-3.32	-183.89	46.79	-76.21	-1.51
70	19	142.67	-1.26	-530.27	62.93	-32.35	1.26
70	20	152.97	-5.91	-542.94	78.02	-34.48	2.53
70	21	-109.83	1.24	-170.21	31.87	-73.70	-2.58
70	22	-99.53	-3.40	-182.88	46.97	-75.83	-1.31
70	23	167.08	-1.38	-550.85	62.58	-24.80	1.52
70	24	179.21	-5.87	-565.54	77.32	-27.68	2.39
70	25	-136.07	1.21	-147.62	32.58	-80.51	-2.43
70	26	-123.94	-3.28	-162.31	47.31	-83.39	-1.56
70	27	168.00	-1.31	-551.86	62.40	-25.18	1.32
70	28	178.29	-5.95	-564.53	77.50	-27.31	2.59
70	29	-135.16	1.29	-148.63	32.40	-80.88	-2.63
70	30	-124.86	-3.36	-161.30	47.49	-83.01	-1.36
70	31	39.22	4.78	-386.11	35.05	-43.10	-0.90
70	32	79.67	-10.19	-435.07	84.17	-52.69	2.01
70	33	-36.53	5.53	-278.09	25.73	-55.50	-2.05
70	34	3.91	-9.44	-327.05	74.85	-65.09	0.85
70	35	46.82	4.77	-392.58	34.89	-40.94	-0.88
70	36	87.26	-10.21	-441.54	84.01	-50.53	2.02
70	37	-44.13	5.54	-271.61	25.89	-57.66	-2.07
70	38	-3.68	-9.43	-320.57	75.01	-67.24	0.84
70	39	42.28	5.03	-389.48	34.45	-44.34	-1.56
70	40	76.61	-10.45	-431.70	84.76	-51.44	2.67

70	41	-33.47	5.78	-281.46	25.14	-56.75	-2.72
70	42	0.86	-9.70	-323.68	75.45	-63.85	1.52
70	43	49.88	5.02	-395.95	34.29	-42.19	-1.55
70	44	84.21	-10.46	-438.18	84.60	-49.29	2.69
70	45	-41.07	5.80	-274.98	25.29	-58.90	-2.73
70	46	-6.74	-9.68	-317.21	75.60	-66.00	1.50
70	47	-196.75	-0.37	-56.03	31.44	-91.53	-3.02
70	48	239.89	-4.29	-657.12	78.46	-16.66	2.98
70	49	29.28	-14.48	-363.84	94.44	-56.05	2.78
70	50	13.86	9.82	-349.31	15.46	-52.14	-2.82
71	1	-26.19	-8.81	-500.18	-0.29	-83.43	-0.72
71	2	-26.67	-9.34	-501.24	-0.64	-83.66	-0.77
71	3	-27.70	-9.07	-544.56	-10.90	-87.99	0.86
71	4	-28.18	-9.60	-545.62	-11.25	-88.21	0.81
71	5	-19.52	-6.16	-368.69	-0.85	-61.14	-0.64
71	6	-19.99	-6.69	-369.75	-1.20	-61.37	-0.69
71	7	-21.03	-6.43	-413.07	-11.46	-65.70	0.94
71	8	-21.51	-6.96	-414.13	-11.81	-65.92	0.89
71	9	-27.14	-9.87	-502.30	-1.00	-83.88	-0.83
71	10	-27.25	-8.99	-531.25	-7.72	-86.62	0.39
71	11	-28.20	-10.05	-533.36	-8.42	-87.07	0.28
71	12	-20.47	-7.22	-370.80	-1.56	-61.59	-0.74
71	13	-20.58	-6.35	-399.76	-8.28	-64.33	0.47
71	14	-21.53	-7.41	-401.87	-8.98	-64.78	0.37
71	15	184.38	-143.68	-365.69	-24.30	-23.71	4.05
71	16	154.58	-359.86	-402.96	0.32	-32.92	8.84
71	17	-194.83	347.32	-369.92	-10.51	-93.01	-8.85
71	18	-224.63	131.15	-407.19	14.11	-102.22	-4.06
71	19	183.20	-171.10	-366.94	-24.27	-24.76	4.30
71	20	155.77	-332.44	-401.71	0.29	-31.86	8.60
71	21	-196.01	319.91	-371.17	-10.48	-94.06	-8.61
71	22	-223.45	158.56	-405.95	14.08	-101.17	-4.31
71	23	239.98	-271.21	-374.38	-24.88	-17.69	6.39
71	24	210.19	-487.38	-411.65	-0.26	-26.90	11.18
71	25	-250.43	474.85	-361.24	-9.93	-99.03	-11.19
71	26	-280.23	258.67	-398.50	14.69	-108.24	-6.40
71	27	238.80	-298.62	-375.62	-24.85	-18.74	6.63
71	28	211.37	-459.97	-410.40	-0.29	-25.85	10.94
71	29	-251.61	447.43	-362.48	-9.90	-100.08	-10.95
71	30	-279.05	286.08	-397.26	14.66	-107.18	-6.64
71	31	86.42	280.37	-323.69	-48.20	-37.22	-6.05
71	32	-12.91	-440.21	-447.92	33.87	-67.92	9.92
71	33	-27.34	427.68	-324.96	-44.06	-58.01	-9.93
71	34	-126.67	-292.91	-449.19	38.00	-88.71	6.04
71	35	103.11	242.12	-326.30	-48.37	-35.41	-5.35
71	36	3.77	-478.47	-450.53	33.69	-66.11	10.62
71	37	-44.02	465.93	-322.36	-43.89	-59.82	-10.63
71	38	-143.35	-254.65	-446.58	38.18	-90.51	5.34
71	39	82.49	189.00	-327.85	-48.11	-40.73	-5.24
71	40	-8.97	-348.83	-443.77	33.78	-64.41	9.10
71	41	-31.28	336.30	-329.12	-43.97	-61.52	-9.11
71	42	-122.73	-201.53	-445.04	37.92	-85.20	5.23
71	43	99.17	150.74	-330.45	-48.28	-38.92	-4.54
71	44	7.71	-387.09	-446.37	33.60	-62.60	9.80
71	45	-47.96	374.55	-326.51	-43.80	-63.32	-9.81
71	46	-139.41	-163.27	-442.43	38.09	-87.00	4.53
71	47	-363.65	491.51	-379.66	6.02	-122.02	-12.16
71	48	323.41	-504.04	-393.22	-16.21	-3.91	12.15
71	49	-74.44	-501.19	-482.32	60.27	-83.43	11.97
71	50	34.19	488.66	-290.57	-70.46	-42.50	-11.98
72	1	0.66	8.44	-448.58	73.23	91.34	14.90
72	2	0.48	8.43	-448.79	73.20	91.75	14.85
72	3	1.88	9.17	-510.64	79.40	97.58	16.94
72	4	1.70	9.17	-510.86	79.37	97.98	16.89
72	5	0.48	6.38	-333.09	54.58	69.71	11.26
72	6	0.30	6.38	-333.30	54.55	70.12	11.21
72	7	1.70	7.12	-395.16	60.76	75.94	13.30
72	8	1.52	7.12	-395.37	60.73	76.35	13.25
72	9	0.30	8.43	-449.01	73.17	92.16	14.80
72	10	1.51	8.95	-492.02	77.55	95.71	16.33
72	11	1.16	8.95	-492.45	77.49	96.52	16.23
72	12	0.12	6.38	-333.52	54.53	70.52	11.16
72	13	1.33	6.90	-376.54	58.91	74.07	12.69
72	14	0.98	6.89	-376.97	58.85	74.89	12.59
72	15	55.97	-24.04	-347.59	52.50	100.86	-75.67
72	16	30.62	-54.66	-351.07	69.06	138.19	-144.16
72	17	-28.69	68.02	-364.77	45.04	6.21	168.32

72	18	-54.04	37.40	-368.24	61.60	43.54	99.83
72	19	52.77	-29.22	-352.32	54.62	104.04	-88.29
72	20	33.82	-49.48	-346.33	66.95	135.01	-131.54
72	21	-31.89	62.84	-369.50	47.16	9.39	155.70
72	22	-50.84	42.58	-363.51	59.49	40.36	112.45
72	23	61.05	-46.84	-344.35	54.69	121.40	-135.76
72	24	35.70	-77.46	-347.83	71.25	158.73	-204.24
72	25	-33.76	90.81	-368.00	42.86	-14.33	228.40
72	26	-59.11	60.20	-371.48	59.42	23.00	159.91
72	27	57.85	-52.02	-349.08	56.80	124.58	-148.37
72	28	38.90	-72.28	-343.10	69.13	155.55	-191.63
72	29	-36.96	85.64	-372.73	44.97	-11.15	215.78
72	30	-55.91	65.37	-366.75	57.31	19.82	172.53
72	31	55.92	43.90	-349.54	30.58	24.18	89.62
72	32	-28.58	-58.16	-361.14	85.77	148.62	-138.66
72	33	30.52	71.52	-354.69	28.34	-4.22	162.82
72	34	-53.98	-30.54	-366.29	83.53	120.23	-65.47
72	35	57.44	37.06	-348.57	31.23	30.34	71.60
72	36	-27.06	-65.00	-360.17	86.42	154.78	-156.69
72	37	29.00	78.36	-355.67	27.68	-10.38	180.84
72	38	-55.50	-23.70	-367.26	82.87	114.06	-47.44
72	39	45.25	26.64	-365.32	37.62	34.78	47.57
72	40	-17.92	-40.90	-345.36	78.73	138.02	-96.61
72	41	19.85	54.26	-370.47	35.38	6.39	120.77
72	42	-43.32	-13.28	-350.52	76.49	109.62	-23.41
72	43	46.77	19.80	-364.35	38.27	40.94	29.54
72	44	-16.40	-47.74	-344.39	79.38	144.18	-114.64
72	45	18.33	61.09	-371.44	34.72	0.22	138.79
72	46	-44.84	-6.44	-351.49	75.84	103.46	-5.39
72	47	-68.25	98.98	-372.25	49.86	-20.18	256.37
72	48	70.19	-85.62	-343.58	64.24	164.58	-232.21
72	49	-57.53	-58.99	-345.80	95.51	161.98	-129.82
72	50	59.47	72.34	-370.04	18.60	-17.57	153.97
114	1	41.93	-5.90	-928.32	-54.62	-133.28	1.93
114	2	42.19	-5.86	-933.50	-54.09	-134.11	1.96
114	3	48.18	-9.04	-1059.89	-84.55	-153.11	1.77
114	4	48.44	-8.99	-1065.07	-84.02	-153.94	1.80
114	5	31.28	-4.28	-693.83	-39.59	-99.43	1.47
114	6	31.54	-4.23	-699.00	-39.07	-100.26	1.50
114	7	37.53	-7.42	-825.40	-69.52	-119.26	1.30
114	8	37.79	-7.37	-830.57	-68.99	-120.09	1.33
114	9	42.45	-5.81	-938.67	-53.57	-134.93	1.99
114	10	46.31	-8.10	-1020.42	-75.57	-147.16	1.82
114	11	46.83	-8.00	-1030.77	-74.52	-148.81	1.87
114	12	31.80	-4.18	-704.18	-38.54	-101.08	1.53
114	13	35.66	-6.48	-785.93	-60.54	-113.31	1.35
114	14	36.18	-6.38	-796.28	-59.49	-114.96	1.41
114	15	20.49	-10.21	-795.65	-56.19	-62.68	3.85
114	16	18.42	-10.45	-769.64	-29.91	-55.40	4.69
114	17	49.14	-0.62	-723.27	-73.21	-159.33	-1.88
114	18	47.07	-0.86	-697.26	-46.93	-152.05	-1.05
114	19	20.34	-10.51	-792.78	-53.67	-62.03	3.78
114	20	18.58	-10.15	-772.51	-32.43	-56.05	4.76
114	21	48.99	-0.92	-720.40	-70.69	-158.68	-1.95
114	22	47.22	-0.56	-700.13	-49.46	-152.70	-0.98
114	23	16.60	-12.03	-796.11	-47.63	-49.20	4.43
114	24	14.53	-12.27	-770.10	-21.35	-41.91	5.26
114	25	53.04	1.20	-722.81	-81.77	-172.82	-2.45
114	26	50.96	0.96	-696.80	-55.50	-165.53	-1.62
114	27	16.45	-12.33	-793.24	-45.11	-48.54	4.35
114	28	14.68	-11.97	-772.96	-23.87	-42.57	5.33
114	29	52.88	0.90	-719.94	-79.25	-172.16	-2.53
114	30	51.12	1.26	-699.67	-58.02	-166.19	-1.55
114	31	32.94	-6.58	-800.66	-92.81	-105.01	0.88
114	32	26.03	-7.37	-713.96	-5.21	-80.72	3.65
114	33	41.53	-3.70	-778.95	-97.91	-134.01	-0.84
114	34	34.63	-4.49	-692.25	-10.32	-109.72	1.93
114	35	31.77	-7.12	-800.80	-90.24	-100.96	1.05
114	36	24.86	-7.92	-714.10	-2.65	-76.68	3.82
114	37	42.70	-3.15	-778.81	-100.48	-138.05	-1.02
114	38	35.79	-3.95	-692.11	-12.89	-113.76	1.76
114	39	32.42	-7.57	-791.10	-84.40	-102.83	0.63
114	40	26.55	-6.37	-723.52	-13.62	-82.90	3.89
114	41	41.02	-4.70	-769.39	-89.51	-131.83	-1.09
114	42	35.14	-3.50	-701.81	-18.72	-111.90	2.17
114	43	31.26	-8.12	-791.24	-81.83	-98.79	0.81
114	44	25.38	-6.92	-723.66	-11.05	-78.86	4.06

114	45	42.19	-4.15	-769.25	-92.08	-135.87	-1.26
114	46	36.31	-2.95	-701.67	-21.29	-115.94	2.00
114	47	59.46	3.57	-690.30	-72.66	-194.34	-3.55
114	48	8.10	-14.64	-802.61	-30.46	-20.39	6.35
114	49	30.15	-5.00	-684.97	12.08	-94.71	3.72
114	50	37.42	-6.07	-807.94	-115.21	-120.02	-0.91
118	1	4.25	5.31	-1213.28	35.29	-28.21	5.48
118	2	4.25	5.29	-1220.17	35.27	-28.16	5.49
118	3	3.37	7.26	-1334.25	47.62	-22.24	6.74
118	4	3.37	7.24	-1341.14	47.60	-22.19	6.75
118	5	3.34	3.95	-914.46	26.24	-22.15	4.04
118	6	3.34	3.93	-921.35	26.22	-22.10	4.05
118	7	2.46	5.89	-1035.44	38.58	-16.18	5.30
118	8	2.46	5.88	-1042.33	38.56	-16.13	5.31
118	9	4.25	5.28	-1227.06	35.25	-28.11	5.50
118	10	3.63	6.67	-1297.96	43.92	-24.03	6.36
118	11	3.63	6.64	-1311.74	43.88	-23.93	6.38
118	12	3.34	3.92	-928.25	26.20	-22.05	4.06
118	13	2.73	5.31	-999.14	34.88	-17.97	4.92
118	14	2.73	5.28	-1012.93	34.84	-17.87	4.94
118	15	-30.03	-13.57	-1037.38	-63.90	306.28	6.92
118	16	-32.55	8.39	-1005.54	138.87	353.26	7.96
118	17	38.53	1.06	-920.17	-76.51	-392.78	1.12
118	18	36.01	23.02	-888.32	126.25	-345.80	2.16
118	19	-35.64	-11.69	-1036.23	-42.99	354.06	6.57
118	20	-26.94	6.52	-1006.69	117.96	305.48	8.32
118	21	32.92	2.94	-919.01	-55.61	-345.00	0.77
118	22	41.62	21.14	-889.48	105.34	-393.58	2.52
118	23	-40.71	-10.42	-1045.59	-9.37	426.23	6.86
118	24	-43.23	11.54	-1013.75	193.39	473.21	7.90
118	25	49.20	-2.09	-911.96	-131.04	-512.73	1.19
118	26	46.69	19.87	-880.11	71.72	-465.75	2.23
118	27	-46.32	-8.54	-1044.44	11.54	474.01	6.50
118	28	-37.62	9.67	-1014.90	172.48	425.43	8.25
118	29	43.59	-0.21	-910.80	-110.13	-464.95	0.83
118	30	52.30	17.99	-881.27	50.81	-513.53	2.58
118	31	-3.10	-34.07	-1033.51	-304.87	6.81	3.68
118	32	-11.49	39.13	-927.36	371.00	163.39	7.15
118	33	17.47	-29.68	-998.34	-308.65	-202.91	1.94
118	34	9.08	43.52	-892.20	367.22	-46.33	5.41
118	35	-6.30	-33.12	-1035.97	-288.51	42.79	3.66
118	36	-14.69	40.08	-929.82	387.36	199.37	7.13
118	37	20.67	-30.62	-995.88	-325.01	-238.89	1.96
118	38	12.28	42.57	-889.73	350.86	-82.31	5.43
118	39	-21.80	-27.81	-1029.66	-235.17	166.08	2.50
118	40	7.21	32.88	-931.21	301.31	4.12	8.33
118	41	-1.23	-23.43	-994.50	-238.96	-43.64	0.76
118	42	27.78	37.27	-896.04	297.52	-205.60	6.59
118	43	-25.00	-26.87	-1032.12	-218.81	202.06	2.48
118	44	4.01	33.83	-933.67	317.66	40.10	8.31
118	45	1.97	-24.37	-992.03	-255.31	-79.62	0.77
118	46	30.98	36.32	-893.58	281.16	-241.58	6.61
118	47	65.94	13.71	-864.34	-24.87	-671.63	0.14
118	48	-59.96	-4.25	-1061.36	87.22	632.11	8.94
118	49	16.81	58.68	-882.08	516.15	-74.45	8.17
118	50	-10.83	-49.22	-1043.63	-453.80	34.93	0.92
121	1	19.31	68.99	-1248.03	219.17	-166.96	1.00
121	2	19.58	69.59	-1260.45	221.07	-169.27	1.00
121	3	21.97	90.13	-1459.47	286.27	-190.24	1.15
121	4	22.24	90.73	-1471.89	288.17	-192.55	1.16
121	5	14.30	50.22	-925.32	159.53	-123.60	0.75
121	6	14.57	50.82	-937.74	161.43	-125.91	0.75
121	7	16.96	71.36	-1136.76	226.64	-146.88	0.90
121	8	17.23	71.95	-1149.18	228.54	-149.19	0.90
121	9	19.85	70.19	-1272.87	222.97	-171.58	1.01
121	10	21.17	83.79	-1396.04	266.14	-183.25	1.11
121	11	21.71	84.98	-1420.87	269.94	-187.87	1.11
121	12	14.84	51.42	-950.16	163.33	-128.22	0.75
121	13	16.16	65.02	-1073.33	206.50	-139.90	0.86
121	14	16.70	66.21	-1098.16	210.31	-144.52	0.86
121	15	16.24	53.71	-1002.54	171.55	-89.11	1.57
121	16	17.21	62.20	-972.77	199.78	-79.00	3.05
121	17	13.51	55.15	-1047.03	172.97	-186.83	-1.44
121	18	14.48	63.64	-1017.26	201.20	-176.72	0.05
121	19	16.52	53.87	-1000.69	172.24	-86.94	1.53
121	20	16.93	62.04	-974.62	199.09	-81.17	3.09
121	21	13.79	55.31	-1045.18	173.66	-184.66	-1.47

121	22	14.20	63.48	-1019.10	200.51	-178.89	0.09
121	23	17.34	54.30	-991.84	174.22	-72.45	1.92
121	24	18.32	62.79	-962.07	202.45	-62.34	3.41
121	25	12.40	54.56	-1057.73	170.29	-203.49	-1.79
121	26	13.38	63.05	-1027.96	198.52	-193.38	-0.30
121	27	17.62	54.46	-989.99	174.91	-70.28	1.88
121	28	18.03	62.63	-963.92	201.76	-64.51	3.45
121	29	12.69	54.72	-1055.88	170.98	-201.32	-1.83
121	30	13.10	62.89	-1029.81	197.83	-195.55	-0.27
121	31	14.15	44.31	-1052.85	139.11	-135.10	-1.22
121	32	17.39	72.61	-953.61	233.21	-101.42	3.74
121	33	13.33	44.74	-1066.19	139.54	-164.41	-2.12
121	34	16.57	73.04	-966.95	233.64	-130.73	2.84
121	35	14.48	44.48	-1049.63	139.91	-130.10	-1.11
121	36	17.72	72.79	-950.40	234.01	-96.42	3.85
121	37	13.00	44.56	-1069.40	138.73	-169.41	-2.23
121	38	16.24	72.87	-970.16	232.83	-135.73	2.73
121	39	15.09	44.85	-1046.69	141.41	-127.89	-1.35
121	40	16.45	72.07	-959.76	230.91	-108.63	3.87
121	41	14.27	45.28	-1060.04	141.84	-157.20	-2.25
121	42	15.63	72.50	-973.11	231.33	-137.94	2.97
121	43	15.42	45.03	-1043.48	142.21	-122.89	-1.24
121	44	16.78	72.25	-956.55	231.71	-103.63	3.97
121	45	13.94	45.10	-1063.25	141.03	-162.20	-2.36
121	46	15.30	72.32	-976.32	230.53	-142.94	2.86
121	47	12.25	59.31	-1054.21	185.22	-224.01	-1.83
121	48	18.48	58.04	-965.59	187.52	-41.82	3.45
121	49	17.06	80.90	-935.74	259.81	-117.40	4.85
121	50	13.66	36.45	-1084.06	112.93	-148.43	-3.24
122	1	15.36	70.22	-1270.44	223.16	-132.57	0.29
122	2	15.60	70.83	-1283.20	225.12	-134.64	0.30
122	3	17.43	92.03	-1488.13	292.44	-149.87	0.47
122	4	17.67	92.65	-1500.88	294.40	-151.93	0.47
122	5	11.37	51.12	-942.38	162.45	-98.19	0.20
122	6	11.61	51.73	-955.14	164.41	-100.26	0.20
122	7	13.44	72.93	-1160.07	231.74	-115.49	0.38
122	8	13.68	73.55	-1172.82	233.70	-117.56	0.38
122	9	15.84	71.45	-1295.95	227.08	-136.70	0.30
122	10	16.81	85.49	-1422.82	271.66	-144.68	0.42
122	11	17.29	86.72	-1448.33	275.58	-148.81	0.43
122	12	11.85	52.35	-967.89	166.37	-102.33	0.21
122	13	12.82	66.39	-1094.76	210.95	-110.30	0.32
122	14	13.30	67.62	-1120.27	214.87	-114.43	0.33
122	15	13.30	56.37	-1062.28	178.96	-67.14	1.77
122	16	13.89	64.53	-1037.39	205.29	-59.33	3.79
122	17	10.50	55.16	-1021.52	175.05	-150.89	-3.25
122	18	11.09	63.32	-996.63	201.38	-143.08	-1.23
122	19	13.52	55.88	-1064.58	177.39	-65.63	1.65
122	20	13.67	65.02	-1035.10	206.86	-60.84	3.91
122	21	10.73	54.67	-1023.82	173.47	-149.38	-3.37
122	22	10.87	63.80	-994.34	202.95	-144.59	-1.11
122	23	14.46	54.83	-1070.80	173.98	-54.02	2.24
122	24	15.05	62.99	-1045.91	200.31	-46.22	4.25
122	25	9.34	56.69	-1013.00	180.03	-164.00	-3.71
122	26	9.93	64.85	-988.11	206.36	-156.20	-1.70
122	27	14.68	54.34	-1073.10	172.41	-52.52	2.12
122	28	14.83	63.48	-1043.62	201.88	-47.72	4.37
122	29	9.57	56.21	-1015.30	178.46	-162.50	-3.83
122	30	9.71	65.34	-985.82	207.93	-157.70	-1.58
122	31	11.63	46.42	-1077.05	146.87	-105.55	-2.33
122	32	13.60	73.63	-994.09	234.64	-79.54	4.38
122	33	10.80	46.06	-1064.83	145.69	-130.68	-3.84
122	34	12.76	73.27	-981.86	233.47	-104.67	2.87
122	35	11.98	45.96	-1079.61	145.37	-101.62	-2.19
122	36	13.95	73.17	-996.64	233.15	-75.61	4.52
122	37	10.45	46.52	-1062.27	147.19	-134.61	-3.98
122	38	12.41	73.73	-979.30	234.96	-108.60	2.73
122	39	12.37	44.80	-1084.71	141.63	-100.54	-2.73
122	40	12.86	75.25	-986.44	239.88	-84.55	4.78
122	41	11.53	44.44	-1072.48	140.45	-125.67	-4.24
122	42	12.02	74.89	-974.21	238.71	-109.68	3.28
122	43	12.72	44.34	-1087.26	140.13	-96.61	-2.60
122	44	13.21	74.79	-988.99	238.39	-80.62	4.92
122	45	11.19	44.90	-1069.92	141.95	-129.60	-4.38
122	46	11.67	75.35	-971.65	240.20	-113.61	3.14
122	47	8.97	58.82	-989.76	186.85	-182.04	-4.02
122	48	15.42	60.86	-1069.16	193.49	-28.18	4.56

122	49	12.46	82.76	-957.99	264.10	-92.41	5.91
122	50	11.93	36.93	-1100.93	116.24	-117.81	-5.37
125	1	-8.97	6.03	-1233.97	40.61	61.41	-5.02
125	2	-8.95	6.03	-1240.99	40.70	61.18	-5.02
125	3	-9.87	8.33	-1358.80	55.20	69.52	-6.42
125	4	-9.85	8.33	-1365.82	55.30	69.30	-6.42
125	5	-6.78	4.46	-929.27	30.11	46.21	-3.65
125	6	-6.76	4.45	-936.29	30.21	45.99	-3.65
125	7	-7.68	6.76	-1054.10	44.70	54.33	-5.05
125	8	-7.67	6.76	-1061.12	44.80	54.11	-5.05
125	9	-8.93	6.02	-1248.01	40.80	60.96	-5.01
125	10	-9.60	7.64	-1321.35	50.82	67.09	-6.00
125	11	-9.56	7.64	-1335.39	51.02	66.64	-5.99
125	12	-6.74	4.45	-943.31	30.30	45.77	-3.64
125	13	-7.41	6.07	-1016.65	40.33	51.90	-4.63
125	14	-7.37	6.07	-1030.69	40.52	51.45	-4.62
125	15	-42.05	-4.20	-943.70	-72.60	382.07	-0.77
125	16	-47.67	15.78	-914.67	86.15	440.63	-2.71
125	17	33.39	-5.03	-1043.73	-14.25	-341.71	-5.72
125	18	27.77	14.95	-1014.70	144.50	-283.15	-7.66
125	19	-46.58	-7.39	-945.95	-99.93	428.57	-1.10
125	20	-43.15	18.98	-912.43	113.48	394.13	-2.38
125	21	28.87	-8.23	-1045.98	-41.58	-295.21	-6.05
125	22	32.29	18.15	-1012.46	171.83	-329.65	-7.33
125	23	-54.35	-9.70	-937.12	-130.68	507.74	-0.97
125	24	-59.97	10.28	-908.09	28.06	566.29	-2.91
125	25	45.69	0.47	-1050.32	43.83	-467.37	-5.51
125	26	40.07	20.45	-1021.28	202.58	-408.81	-7.45
125	27	-58.87	-12.89	-939.37	-158.02	554.23	-1.30
125	28	-55.45	13.48	-905.85	55.40	519.80	-2.58
125	29	41.16	-2.73	-1052.56	16.50	-420.88	-5.85
125	30	44.59	23.65	-1019.04	229.91	-455.31	-7.12
125	31	-9.09	-27.80	-1012.58	-237.39	60.43	-0.24
125	32	-27.83	38.80	-915.81	291.78	255.63	-6.70
125	33	13.54	-28.05	-1042.59	-219.88	-156.70	-1.72
125	34	-5.19	38.55	-945.82	309.28	38.49	-8.19
125	35	-12.78	-29.45	-1010.61	-254.81	98.13	-0.30
125	36	-31.51	37.15	-913.84	274.35	293.32	-6.77
125	37	17.23	-26.40	-1044.57	-202.46	-194.40	-1.66
125	38	-1.50	40.20	-947.80	326.71	0.79	-8.13
125	39	-24.16	-38.46	-1020.06	-328.49	215.42	-1.34
125	40	-12.75	49.46	-908.33	382.88	100.64	-5.60
125	41	-1.53	-38.71	-1050.07	-310.99	-1.72	-2.83
125	42	9.88	49.21	-938.34	400.39	-116.49	-7.08
125	43	-27.85	-40.11	-1018.09	-345.92	253.11	-1.40
125	44	-16.44	47.81	-906.36	365.46	138.34	-5.66
125	45	2.16	-37.06	-1052.05	-293.56	-39.42	-2.77
125	46	13.57	50.86	-940.31	417.81	-154.19	-7.02
125	47	62.63	9.46	-1062.69	132.25	-626.79	-7.82
125	48	-76.91	1.30	-895.71	-60.36	725.71	-0.60
125	49	-11.47	66.72	-896.79	524.58	95.62	-8.51
125	50	-2.81	-55.97	-1061.62	-452.69	3.30	0.08
126	1	19.91	6.08	-1535.93	63.17	-211.21	0.01
126	2	20.15	6.32	-1547.65	65.74	-213.72	0.02
126	3	23.64	1.93	-1843.87	18.36	-250.55	-1.55
126	4	23.88	2.17	-1855.60	20.94	-253.06	-1.54
126	5	14.62	4.81	-1133.83	49.98	-155.05	0.15
126	6	14.85	5.05	-1145.55	52.56	-157.57	0.16
126	7	18.35	0.65	-1441.78	5.17	-194.39	-1.41
126	8	18.59	0.89	-1453.50	7.75	-196.90	-1.40
126	9	20.38	6.56	-1559.37	68.32	-216.23	0.03
126	10	22.52	3.17	-1751.49	31.80	-238.74	-1.08
126	11	22.99	3.65	-1774.94	36.95	-243.77	-1.06
126	12	15.09	5.29	-1157.28	55.13	-160.08	0.17
126	13	17.23	1.90	-1349.39	18.61	-182.59	-0.95
126	14	17.70	2.38	-1372.84	23.77	-187.61	-0.93
126	15	14.70	-0.09	-1248.98	7.96	-101.99	-0.23
126	16	15.15	4.11	-1230.00	70.35	-93.13	2.28
126	17	17.07	2.18	-1284.01	-6.23	-248.45	-3.24
126	18	17.52	6.38	-1265.04	56.16	-239.59	-0.73
126	19	14.93	-0.09	-1248.41	10.36	-101.16	-0.67
126	20	14.92	4.12	-1230.57	67.94	-93.96	2.72
126	21	17.30	2.18	-1283.45	-3.83	-247.61	-3.68
126	22	17.29	6.39	-1265.60	53.76	-240.42	-0.29
126	23	15.20	-0.14	-1242.90	18.01	-83.56	-0.49
126	24	15.65	4.06	-1223.93	80.40	-74.70	2.03
126	25	16.57	2.23	-1290.09	-16.28	-266.88	-2.98

126	26	17.02	6.44	-1271.11	46.11	-258.02	-0.47
126	27	15.43	-0.14	-1242.34	20.41	-82.72	-0.92
126	28	15.42	4.06	-1224.49	77.99	-75.53	2.47
126	29	16.80	2.23	-1289.52	-13.88	-266.05	-3.42
126	30	16.79	6.44	-1271.68	43.71	-258.85	-0.03
126	31	15.00	-4.20	-1283.38	-69.80	-163.59	-4.22
126	32	16.51	9.81	-1220.13	138.17	-134.05	4.16
126	33	15.71	-3.51	-1293.89	-74.05	-207.53	-5.12
126	34	17.22	10.49	-1230.64	133.91	-177.98	3.26
126	35	15.15	-4.21	-1281.56	-66.78	-158.06	-4.29
126	36	16.66	9.79	-1218.30	141.18	-128.52	4.08
126	37	15.56	-3.50	-1295.71	-77.07	-213.06	-5.04
126	38	17.07	10.51	-1232.46	130.90	-183.51	3.34
126	39	15.78	-4.21	-1281.50	-61.79	-160.81	-5.68
126	40	15.73	9.82	-1222.01	130.16	-136.84	5.62
126	41	16.49	-3.52	-1292.01	-66.05	-204.74	-6.58
126	42	16.44	10.50	-1232.52	125.91	-180.77	4.72
126	43	15.93	-4.22	-1279.67	-58.78	-155.28	-5.75
126	44	15.88	9.80	-1220.19	133.18	-131.31	5.55
126	45	16.34	-3.51	-1293.83	-69.06	-210.27	-6.50
126	46	16.29	10.52	-1234.34	122.89	-186.30	4.80
126	47	17.48	4.99	-1289.76	12.15	-300.94	-2.43
126	48	14.75	1.31	-1224.25	51.96	-40.63	1.47
126	49	16.73	14.41	-1208.14	191.87	-158.67	7.28
126	50	15.50	-8.12	-1305.88	-127.76	-182.91	-8.24
127	1	18.86	5.57	-1549.71	61.84	-211.22	-8.94
127	2	19.10	5.82	-1561.88	64.53	-213.82	-8.97
127	3	22.27	1.14	-1865.88	14.86	-249.17	-11.97
127	4	22.51	1.39	-1878.05	17.54	-251.77	-12.01
127	5	13.86	4.45	-1143.88	49.22	-155.27	-6.52
127	6	14.09	4.70	-1156.05	51.91	-157.87	-6.56
127	7	17.27	0.02	-1460.05	2.23	-193.22	-9.56
127	8	17.50	0.26	-1472.22	4.92	-195.82	-9.59
127	9	19.33	6.07	-1574.05	67.22	-216.42	-9.01
127	10	21.25	2.47	-1771.03	28.95	-237.78	-11.06
127	11	21.72	2.96	-1795.37	34.33	-242.99	-11.13
127	12	14.33	4.94	-1168.22	54.59	-160.47	-6.59
127	13	16.24	1.35	-1365.20	16.33	-181.83	-8.65
127	14	16.72	1.84	-1389.54	21.70	-187.04	-8.72
127	15	13.60	0.73	-1290.12	7.84	-108.63	-6.24
127	16	13.94	5.24	-1273.83	61.31	-99.93	-2.88
127	17	16.50	0.11	-1266.87	-0.45	-240.96	-12.60
127	18	16.84	4.62	-1250.58	53.02	-232.27	-9.23
127	19	13.84	0.44	-1291.12	4.11	-108.39	-6.75
127	20	13.70	5.53	-1272.82	65.03	-100.17	-2.38
127	21	16.74	-0.18	-1267.87	-4.18	-240.73	-13.10
127	22	16.60	4.92	-1249.58	56.74	-232.50	-8.73
127	23	13.93	-0.59	-1293.93	-5.90	-92.71	-6.33
127	24	14.27	3.92	-1277.63	47.57	-84.01	-2.97
127	25	16.17	1.43	-1263.06	13.28	-256.88	-12.51
127	26	16.51	5.94	-1246.77	66.75	-248.19	-9.14
127	27	14.17	-0.88	-1294.93	-9.62	-92.47	-6.84
127	28	14.03	4.21	-1276.63	51.29	-84.25	-2.47
127	29	16.41	1.14	-1264.07	9.56	-256.65	-13.01
127	30	16.27	6.23	-1245.77	70.47	-248.42	-8.64
127	31	14.22	-4.75	-1300.99	-57.45	-165.09	-12.39
127	32	15.35	10.28	-1246.68	120.79	-136.11	-1.18
127	33	15.09	-4.93	-1294.02	-59.94	-204.79	-14.29
127	34	16.22	10.10	-1239.71	118.30	-175.81	-3.09
127	35	14.32	-5.14	-1302.13	-61.57	-160.31	-12.42
127	36	15.44	9.89	-1247.82	116.67	-131.33	-1.21
127	37	15.00	-4.54	-1292.87	-55.82	-209.56	-14.27
127	38	16.12	10.50	-1238.56	122.42	-180.58	-3.06
127	39	15.01	-5.73	-1304.33	-69.85	-164.30	-14.06
127	40	14.56	11.26	-1243.34	133.19	-136.89	0.49
127	41	15.88	-5.91	-1297.36	-72.34	-204.00	-15.97
127	42	15.43	11.08	-1236.36	130.70	-176.59	-1.41
127	43	15.11	-6.12	-1305.48	-73.97	-159.53	-14.09
127	44	14.66	10.87	-1244.48	129.07	-132.11	0.46
127	45	15.78	-5.52	-1296.22	-68.22	-208.78	-15.94
127	46	15.33	11.47	-1235.22	134.82	-181.37	-1.39
127	47	17.15	1.87	-1248.68	20.60	-287.26	-12.48
127	48	13.29	3.49	-1292.02	40.25	-53.63	-3.00
127	49	15.52	15.40	-1224.67	181.87	-154.20	2.45
127	50	14.92	-10.05	-1316.03	-121.02	-186.69	-17.93
128	1	-45.12	-6.72	-913.09	-62.13	143.05	1.67
128	2	-45.36	-6.67	-918.03	-61.60	143.83	1.67

128	3	-52.41	-10.20	-1047.54	-95.23	166.16	2.37
128	4	-52.66	-10.15	-1052.47	-94.71	166.94	2.37
128	5	-33.60	-4.88	-681.47	-45.06	106.53	1.21
128	6	-33.85	-4.83	-686.40	-44.53	107.31	1.21
128	7	-40.89	-8.36	-815.91	-78.16	129.63	1.91
128	8	-41.14	-8.31	-820.85	-77.64	130.42	1.91
128	9	-45.61	-6.62	-922.96	-61.08	144.61	1.67
128	10	-50.22	-9.15	-1007.21	-85.30	159.22	2.16
128	11	-50.72	-9.05	-1017.07	-84.25	160.79	2.16
128	12	-34.09	-4.78	-691.33	-44.01	108.09	1.21
128	13	-38.70	-7.31	-775.58	-68.23	122.70	1.70
128	14	-39.20	-7.21	-785.44	-67.18	124.27	1.70
128	15	-53.22	-7.52	-717.56	-87.58	170.64	4.40
128	16	-50.12	-5.68	-698.35	-67.02	161.37	2.99
128	17	-22.91	-6.86	-772.14	-49.57	70.17	-2.10e-03
128	18	-19.82	-5.01	-752.93	-29.02	60.90	-1.41
128	19	-52.86	-7.86	-720.80	-91.66	169.61	4.35
128	20	-50.48	-5.33	-695.11	-62.95	162.40	3.04
128	21	-22.55	-7.20	-775.38	-53.65	69.14	-0.05
128	22	-20.18	-4.67	-749.69	-24.94	61.93	-1.36
128	23	-57.42	-8.07	-717.60	-100.38	184.78	4.80
128	24	-54.33	-6.22	-698.39	-79.82	175.51	3.39
128	25	-18.71	-6.31	-772.10	-36.77	56.03	-0.40
128	26	-15.61	-4.47	-752.89	-16.22	46.76	-1.81
128	27	-57.06	-8.41	-720.84	-104.45	183.75	4.75
128	28	-54.68	-5.88	-695.14	-75.75	176.54	3.44
128	29	-18.35	-6.66	-775.35	-40.85	55.00	-0.45
128	30	-15.97	-4.12	-749.65	-12.14	47.79	-1.76
128	31	-46.22	-9.44	-759.08	-98.26	146.29	4.50
128	32	-35.91	-3.29	-695.03	-29.74	115.39	-0.19
128	33	-37.12	-9.25	-775.46	-86.86	116.15	3.18
128	34	-26.82	-3.09	-711.41	-18.34	85.25	-1.51
128	35	-47.48	-9.61	-759.09	-102.10	150.53	4.62
128	36	-37.17	-3.45	-695.05	-33.58	119.64	-0.07
128	37	-35.86	-9.08	-775.44	-83.02	111.91	3.06
128	38	-25.55	-2.93	-711.40	-14.50	81.01	-1.63
128	39	-45.02	-10.59	-769.88	-111.84	142.86	4.33
128	40	-37.11	-2.15	-684.23	-16.16	118.82	-0.03
128	41	-35.92	-10.39	-786.26	-100.44	112.72	3.01
128	42	-28.01	-1.95	-700.61	-4.75	88.68	-1.35
128	43	-46.28	-10.75	-769.90	-115.68	147.10	4.45
128	44	-38.37	-2.31	-684.24	-20.00	123.06	0.09
128	45	-34.66	-10.22	-786.25	-96.60	108.48	2.89
128	46	-26.75	-1.78	-700.59	-0.91	84.44	-1.47
128	47	-9.26	-5.24	-777.00	-16.94	25.21	-2.27
128	48	-63.77	-7.30	-693.49	-99.66	206.33	5.26
128	49	-32.68	-0.20	-676.16	6.15	104.46	-2.09
128	50	-40.35	-12.33	-794.33	-122.74	127.08	5.07

Nodo	**Azione X**	**Azione Y**	**Azione Z**	**Azione RX**	**Azione RY**	**Azione RZ**
	-537.39	-600.56	-1878.05	-1237.67	-1021.14	-232.21
	496.18	536.06	-30.97	1477.87	1122.87	256.37

Nodo	**Cmb**	**Azione X**	**Azione Y**	**Azione Z**	**Azione RX**	**Azione RY**	**Azione RZ**
		kN	kN	kN	kN m	kN m	kN m
3	4	-24.68	12.00	-1124.82	399.68	-165.60	-9.25
	50	-18.89	57.00	-704.47	147.81	-96.01	-21.05
	50	-18.89	57.00	-704.47	147.81	-96.01	-21.05
	4	-24.68	12.00	-1124.82	399.68	-165.60	-9.25
	47	-53.92	-7.46	-853.99	317.09	-245.70	-14.44
	48	21.09	23.04	-709.08	222.07	3.45	1.96
14	4	-64.84	-71.23	-1078.73	139.05	-301.30	-7.10
	50	20.92	336.79	-710.78	-1146.89	-20.24	-118.96
	50	20.92	336.79	-710.78	-1146.89	-20.24	-118.96
	49	-114.55	-432.95	-825.86	1382.54	-409.41	107.48
	47	-285.40	-178.50	-818.38	538.05	-1021.14	-66.78
	48	191.77	82.34	-718.25	-302.40	591.48	55.30
17	4	-6.91	-45.28	-1415.84	68.12	-245.51	6.69
	5	-3.98	-20.30	-874.06	98.33	-156.65	2.84
	50	-1.34	33.37	-910.51	-92.67	-151.45	-11.84
	49	-7.90	-87.62	-1014.00	240.75	-186.26	19.64
	4	-6.91	-45.28	-1415.84	68.12	-245.51	6.69
	15	20.87	-14.27	-969.09	50.41	-114.17	6.90
18	4	-2.57	-44.73	-1368.66	63.34	-248.30	8.05
	5	-1.16	-20.28	-846.93	93.71	-160.97	3.74

	50	-4.40	35.27	-878.49	-100.76	-156.15	-10.78
	49	1.21	-89.05	-984.63	240.82	-188.62	20.48
	4	-2.57	-44.73	-1368.66	63.34	-248.30	8.05
	15	24.56	-12.86	-901.49	30.73	-107.43	8.18
26	4	78.28	-67.28	-1078.41	144.88	445.11	10.99
	47	-187.48	95.28	-708.82	-328.40	-507.78	-53.70
	50	6.63	372.35	-710.90	-1237.67	175.64	141.51
	49	102.07	-463.52	-824.09	1477.87	439.45	-125.91
	47	-187.48	95.28	-708.82	-328.40	-507.78	-53.70
	48	296.18	-186.45	-826.17	568.60	1122.87	69.29
27	50	-3.76	30.54	-402.52	-126.97	-49.56	-6.36
	49	-0.95	-24.15	-131.18	45.72	17.45	5.12
	50	-3.76	30.54	-402.52	-126.97	-49.56	-6.36
	49	-0.95	-24.15	-131.18	45.72	17.45	5.12
	41	-6.39	22.47	-370.81	-102.12	-49.85	-4.00
	40	1.68	-16.09	-162.89	20.88	17.74	2.77
28	47	-131.57	13.03	-534.75	-89.01	-98.44	4.19
	48	109.07	-20.43	-105.62	-40.57	20.36	-3.14
	3	-15.78	-5.65	-457.62	-90.31	-57.28	0.88
	48	109.07	-20.43	-105.62	-40.57	20.36	-3.14
	47	-131.57	13.03	-534.75	-89.01	-98.44	4.19
	48	109.07	-20.43	-105.62	-40.57	20.36	-3.14
29	4	-0.48	4.13	-460.07	-74.02	-72.64	-1.37
	49	1.19	-28.06	-248.74	25.64	-32.00	4.67
	50	-1.49	33.49	-401.68	-129.65	-71.25	-6.47
	49	1.19	-28.06	-248.74	25.64	-32.00	4.67
	47	-14.61	0.05	-330.57	-45.94	-87.38	3.84
	48	14.31	5.38	-319.86	-58.07	-15.88	-5.64
30	48	154.36	3.67	-572.32	-79.74	-38.91	-2.50
	47	-113.80	0.99	-140.38	-36.83	-70.10	2.28
	50	14.62	13.29	-365.69	-96.30	-56.41	-2.52
	49	25.94	-8.64	-347.01	-20.27	-52.59	2.30
	4	29.57	3.81	-509.65	-83.58	-77.67	-0.17
	48	154.36	3.67	-572.32	-79.74	-38.91	-2.50
31	4	-1.63	4.09	-505.74	-84.47	-84.00	-0.94
	49	-0.18	-28.83	-261.08	24.33	-36.78	5.75
	50	-1.67	34.21	-452.77	-142.86	-82.20	-6.97
	49	-0.18	-28.83	-261.08	24.33	-36.78	5.75
	47	-15.34	5.81	-366.85	-67.61	-97.22	2.80
	48	13.49	-0.43	-347.01	-50.92	-21.76	-4.02
32	49	-1.63	-132.45	-505.29	-49.39	-68.07	0.68
	50	0.68	127.42	-91.16	-79.76	-22.34	-0.08
	3	-1.01	-3.55	-426.37	-90.04	-65.98	0.48
	49	-1.63	-132.45	-505.29	-49.39	-68.07	0.68
	47	-14.07	36.77	-240.59	-66.29	-76.65	4.55
	48	13.12	-41.80	-355.86	-62.87	-13.77	-3.95
33	50	2.69	33.09	-377.11	-116.09	58.70	7.59
	49	1.52	-26.33	-91.96	69.14	-8.51	-6.25
	50	2.69	33.09	-377.11	-116.09	58.70	7.59
	49	1.52	-26.33	-91.96	69.14	-8.51	-6.25
	34	1.09	-16.77	-129.29	40.38	-8.69	-3.36
	31	3.11	23.52	-339.78	-87.33	58.88	4.71
36	3	-3.23	3.28	-242.24	-29.87	-15.70	-0.58
	12	-1.46	1.09	-161.13	-15.05	-5.93	-0.26
	50	-1.31	16.69	-162.77	-56.87	-6.17	-3.23
	49	-2.46	-13.12	-180.21	19.99	-10.68	2.51
	47	-10.53	-3.27	-173.38	-5.75	-45.10	4.55
	48	6.76	6.85	-169.60	-31.13	28.25	-5.26
37	4	-6.62	18.00	-1664.25	674.73	-305.38	-5.24
	5	-3.29	8.45	-971.30	365.58	-188.70	-2.84
	50	-6.10	95.50	-1058.06	239.44	-195.08	-24.41
	4	-6.62	18.00	-1664.25	674.73	-305.38	-5.24
	4	-6.62	18.00	-1664.25	674.73	-305.38	-5.24
	48	27.93	18.76	-1113.30	416.88	-138.01	5.81
38	4	-3.88	17.40	-1623.20	658.18	-311.50	-2.61
	5	-1.70	8.10	-950.14	358.18	-192.74	-1.29
	50	-4.38	97.18	-1032.41	225.20	-198.50	-23.69
	4	-3.88	17.40	-1623.20	658.18	-311.50	-2.61
	4	-3.88	17.40	-1623.20	658.18	-311.50	-2.61
	48	30.80	2.03	-1056.62	407.07	-133.43	9.94
39	4	24.22	12.11	-1128.07	394.92	196.65	8.86
	47	-23.91	24.40	-703.65	215.40	10.65	-2.32
	50	18.72	61.45	-704.65	136.18	117.14	22.85
	49	13.18	-45.65	-864.11	398.42	165.72	-10.88
	47	-23.91	24.40	-703.65	215.40	10.65	-2.32
	48	55.81	-8.60	-865.11	319.21	272.21	14.29
44	3	-1.18	0.49	-334.19	59.50	-66.67	-1.48

	50	3.34	15.16	-201.52	-3.72	-29.03	-13.70
	50	3.34	15.16	-201.52	-3.72	-29.03	-13.70
	49	-4.40	-14.38	-283.52	88.85	-66.47	11.84
	47	-14.11	-2.01	-277.52	55.40	-102.66	-5.29
	48	13.05	2.80	-207.52	29.73	7.16	3.43
45	3	4.93	2.11	-344.72	55.48	27.35	1.54
	50	7.23	24.62	-195.65	-19.45	-0.33	6.98
	50	7.23	24.62	-195.65	-19.45	-0.33	6.98
	49	-0.68	-21.98	-307.23	99.98	42.19	-5.53
	47	-16.17	-1.67	-279.23	46.32	-30.02	7.83
	48	22.72	4.30	-223.65	34.20	71.87	-6.38
47	1	0.0	0.0	-59.10	-35.03	1.58	0.0
	5	0.0	0.0	-45.46	-26.95	1.22	0.0
	1	0.0	0.0	-59.10	-35.03	1.58	0.0
	5	0.0	0.0	-45.46	-26.95	1.22	0.0
	5	0.0	0.0	-45.46	-26.95	1.22	0.0
	1	0.0	0.0	-59.10	-35.03	1.58	0.0
51	3	-4.19	0.15	-242.78	-45.11	-17.79	1.97
	12	-2.00	-0.13	-161.48	-28.27	-7.08	1.08
	50	-3.70	15.95	-179.01	-74.78	-14.14	-2.73
	49	-1.32	-15.94	-164.74	12.86	-5.41	5.24
	47	-12.65	-5.28	-168.51	-16.94	-49.70	5.82
	48	7.62	5.29	-175.23	-44.98	30.15	-3.31
52	50	2.53	139.35	-498.58	-105.44	-60.84	2.29
	49	-6.09	-103.15	-94.95	-0.96	-51.38	-0.69
	50	2.53	139.35	-498.58	-105.44	-60.84	2.29
	49	-6.09	-103.15	-94.95	-0.96	-51.38	-0.69
	47	-15.68	-8.63	-255.34	-46.36	-105.42	3.39
	48	12.12	44.83	-338.19	-60.05	-6.79	-1.79
53	3	-2.82	-0.04	-240.69	-21.43	32.19	0.93
	47	-1.29	0.54	-163.11	-11.48	19.84	1.89
	50	-1.82	-0.62	-179.35	-22.61	22.87	3.11
	49	-2.00	0.52	-167.61	-4.47	21.66	-1.96
	47	-1.29	0.54	-163.11	-11.48	19.84	1.89
	3	-2.82	-0.04	-240.69	-21.43	32.19	0.93
55	50	6.71	155.57	-507.73	-118.64	-25.12	23.23
	49	-1.41	-117.28	-104.29	14.00	54.33	-20.49
	50	6.71	155.57	-507.73	-118.64	-25.12	23.23
	49	-1.41	-117.28	-104.29	14.00	54.33	-20.49
	47	-19.26	7.49	-330.03	-63.96	-35.70	10.27
	48	24.56	30.80	-281.99	-40.68	64.92	-7.53
59	3	-2.74	-0.85	-241.79	-47.81	32.58	0.37
	49	-1.65	0.11	-154.94	-21.70	19.05	-2.41
	3	-2.74	-0.85	-241.79	-47.81	32.58	0.37
	49	-1.65	0.11	-154.94	-21.70	19.05	-2.41
	49	-1.65	0.11	-154.94	-21.70	19.05	-2.41
	3	-2.74	-0.85	-241.79	-47.81	32.58	0.37
65	4	-19.09	-44.59	-505.17	-194.20	-4.52	0.04
	50	-58.39	108.14	-245.03	-159.03	27.46	-4.56
	4	-19.09	-44.59	-505.17	-194.20	-4.52	0.04
	48	256.33	536.06	-280.94	-91.39	74.19	7.50
	47	-281.78	-600.56	-440.80	-179.97	-80.37	-6.55
	48	256.33	536.06	-280.94	-91.39	74.19	7.50
66	47	-214.21	-2.56	-618.22	93.69	-123.47	-4.16
	48	184.38	2.50	-30.97	35.27	40.92	3.12
	50	-9.90	13.01	-358.47	34.38	-48.55	-2.18
	49	-19.92	-13.06	-290.71	94.59	-34.00	1.14
	47	-214.21	-2.56	-618.22	93.69	-123.47	-4.16
	48	184.38	2.50	-30.97	35.27	40.92	3.12
67	4	-30.91	-19.09	-499.45	-21.92	-77.31	2.31
	50	-113.49	305.75	-274.20	-85.01	-36.50	-4.64
	50	-113.49	305.75	-274.20	-85.01	-36.50	-4.64
	49	72.28	-331.41	-434.12	60.14	-74.15	6.64
	47	-537.39	-112.11	-370.06	-2.09	-118.99	-2.82
	48	496.18	86.45	-338.27	-22.78	8.34	4.82
68	4	-4.64	-19.49	-392.33	-32.12	75.07	-3.30
	50	-0.49	-6.41	-188.07	-10.84	33.34	0.99
	4	-4.64	-19.49	-392.33	-32.12	75.07	-3.30
	50	-0.49	-6.41	-188.07	-10.84	33.34	0.99
	47	-3.88	14.48	-195.60	-31.38	31.68	8.15
	48	-2.76	-42.00	-370.08	-10.88	75.44	-12.80
70	48	239.89	-4.29	-657.12	78.46	-16.66	2.98
	47	-196.75	-0.37	-56.03	31.44	-91.53	-3.02
	50	13.86	9.82	-349.31	15.46	-52.14	-2.82
	49	29.28	-14.48	-363.84	94.44	-56.05	2.78
	47	-196.75	-0.37	-56.03	31.44	-91.53	-3.02
	48	239.89	-4.29	-657.12	78.46	-16.66	2.98

71	4	-28.18	-9.60	-545.62	-11.25	-88.21	0.81
	50	34.19	488.66	-290.57	-70.46	-42.50	-11.98
	50	34.19	488.66	-290.57	-70.46	-42.50	-11.98
	49	-74.44	-501.19	-482.32	60.27	-83.43	11.97
	47	-363.65	491.51	-379.66	6.02	-122.02	-12.16
	48	323.41	-504.04	-393.22	-16.21	-3.91	12.15
72	4	1.70	9.17	-510.86	79.37	97.98	16.89
	5	0.48	6.38	-333.09	54.58	69.71	11.26
	50	59.47	72.34	-370.04	18.60	-17.57	153.97
	49	-57.53	-58.99	-345.80	95.51	161.98	-129.82
	47	-68.25	98.98	-372.25	49.86	-20.18	256.37
	48	70.19	-85.62	-343.58	64.24	164.58	-232.21
114	4	48.44	-8.99	-1065.07	-84.02	-153.94	1.80
	49	30.15	-5.00	-684.97	12.08	-94.71	3.72
	50	37.42	-6.07	-807.94	-115.21	-120.02	-0.91
	49	30.15	-5.00	-684.97	12.08	-94.71	3.72
	47	59.46	3.57	-690.30	-72.66	-194.34	-3.55
	48	8.10	-14.64	-802.61	-30.46	-20.39	6.35
118	4	3.37	7.24	-1341.14	47.60	-22.19	6.75
	47	65.94	13.71	-864.34	-24.87	-671.63	0.14
	50	-10.83	-49.22	-1043.63	-453.80	34.93	0.92
	49	16.81	58.68	-882.08	516.15	-74.45	8.17
	47	65.94	13.71	-864.34	-24.87	-671.63	0.14
	48	-59.96	-4.25	-1061.36	87.22	632.11	8.94
121	4	22.24	90.73	-1471.89	288.17	-192.55	1.16
	5	14.30	50.22	-925.32	159.53	-123.60	0.75
	50	13.66	36.45	-1084.06	112.93	-148.43	-3.24
	4	22.24	90.73	-1471.89	288.17	-192.55	1.16
	47	12.25	59.31	-1054.21	185.22	-224.01	-1.83
	48	18.48	58.04	-965.59	187.52	-41.82	3.45
122	4	17.67	92.65	-1500.88	294.40	-151.93	0.47
	5	11.37	51.12	-942.38	162.45	-98.19	0.20
	50	11.93	36.93	-1100.93	116.24	-117.81	-5.37
	4	17.67	92.65	-1500.88	294.40	-151.93	0.47
	47	8.97	58.82	-989.76	186.85	-182.04	-4.02
	48	15.42	60.86	-1069.16	193.49	-28.18	4.56
125	4	-9.85	8.33	-1365.82	55.30	69.30	-6.42
	48	-76.91	1.30	-895.71	-60.36	725.71	-0.60
	50	-2.81	-55.97	-1061.62	-452.69	3.30	0.08
	49	-11.47	66.72	-896.79	524.58	95.62	-8.51
	47	62.63	9.46	-1062.69	132.25	-626.79	-7.82
	48	-76.91	1.30	-895.71	-60.36	725.71	-0.60
126	4	23.88	2.17	-1855.60	20.94	-253.06	-1.54
	5	14.62	4.81	-1133.83	49.98	-155.05	0.15
	50	15.50	-8.12	-1305.88	-127.76	-182.91	-8.24
	49	16.73	14.41	-1208.14	191.87	-158.67	7.28
	47	17.48	4.99	-1289.76	12.15	-300.94	-2.43
	48	14.75	1.31	-1224.25	51.96	-40.63	1.47
127	4	22.51	1.39	-1878.05	17.54	-251.77	-12.01
	5	13.86	4.45	-1143.88	49.22	-155.27	-6.52
	50	14.92	-10.05	-1316.03	-121.02	-186.69	-17.93
	49	15.52	15.40	-1224.67	181.87	-154.20	2.45
	47	17.15	1.87	-1248.68	20.60	-287.26	-12.48
	48	13.29	3.49	-1292.02	40.25	-53.63	-3.00
128	4	-52.66	-10.15	-1052.47	-94.71	166.94	2.37
	49	-32.68	-0.20	-676.16	6.15	104.46	-2.09
	50	-40.35	-12.33	-794.33	-122.74	127.08	5.07
	49	-32.68	-0.20	-676.16	6.15	104.46	-2.09
	47	-9.26	-5.24	-777.00	-16.94	25.21	-2.27
	48	-63.77	-7.30	-693.49	-99.66	206.33	5.26

RISULTATI OPERE DI FONDAZIONE

LEGENDA RISULTATI OPERE DI FONDAZIONE

Il controllo dei risultati delle analisi condotte, per quanto concerne le opere di fondazione, è possibile in relazione alle tabelle sotto riportate.

La prima tabella è riferita alle fondazioni tipo palo e plinto su pali.
Per questo tipo di fondazione vengono riportate le sei componenti di sollecitazione (espresse nel riferimento globale della struttura) per ogni palo componente l'opera.
In particolare viene riportato:

Nodo	numero del nodo a cui è applicato il plinto
Tipo	codice corrispondente al nome assegnato al tipo di plinto di fondazione: 3) palo singolo (*PALO*) 4) plinto su palo 5) plinto su due pali (*PL.2P*) 6) plinto su tre pali (*PL.3P*) 7) plinto su quattro pali (*PL.4P*) 8) plinto rettangolare su cinque pali (*PL.5P.R*) 9) plinto pentagonale su cinque pali (*PL.5P*) 10) plinto su sei pali (*PL.6P*)
Palo	numero del palo
Comb.	combinazione di carico in cui si verificano le sei componenti di sollecitazione.
Quota	quota assoluta della sezione del palo per cui si riportano le sei componenti di sollecitazione.

L'azione Fz (corrispondente allo sforzo normale nel palo) è costante poiché il peso del palo stesso non è considerato nella modellazione.

La seconda tabella è riferita alle fondazioni tipo plinto su suolo elastico.
Per questo tipo di fondazione vengono riportate le pressioni nei quattro vertici dell'impronta sul terreno.
In particolare viene riportato:

Nodo	numero del nodo a cui è applicato il plinto
Tipo	Codice identificativo del nome assegnato al plinto
area	area dell'impronta del plinto
Wink O Wink V	coefficienti di Winkler (orizzontale e verticale) adottati
Comb	Combinazione di carico in cui si verificano i valori riportati
Pt (P1 P2 P3 P4)	valori di pressione nei vertici

La terza tabella è riferita alle fondazioni tipo platea su suolo elastico.
Per questo tipo di fondazione vengono riportate le pressioni in ogni vertice (nodo) degli elementi costituenti la platea.

La quarta tabella è riferita alle fondazioni tipo trave su suolo elastico.
Per questo tipo di fondazione vengono riportate le pressioni alle estremità dell'elemento e la massima (in valore assoluto) pressione lungo lo sviluppo dell'elemento.
Vengono inoltre riportati, con funzione statistica, i valori massimo e minimo delle pressioni che compaiono nella tabella.

Con riferimento al **Documento di Affidabilità** "*Test di validazione del software di calcolo PRO_SAP e dei moduli aggiuntivi PRO_SAP Modulo Geotecnico, PRO_CAD nodi acciaio e PRO_MST*" - versione Settembre 2014, disponibile per il download sul sito **www.2si.it**, si segnalano i seguenti esempi applicativi:

Test N°	Titolo
105	PLINTO SUPERFICIALE
106	PLINTO SUPERFICIALE
107	PLINTO SUPERFICIALE
108	PLINTO SUPERFICIALE
109	PLINTO SUPERFICIALE
110	PLINTO SUPERFICIALE
111	PLINTO SUPERFICIALE
112	PLINTO SUPERFICIALE
113	PLINTO SUPERFICIALE
114	PLINTO SUPERFICIALE
115	PLINTO SUPERFICIALE
116	PLINTO SUPERFICIALE
117	PLINTO SUPERFICIALE
118	PLINTO SUPERFICIALE
119	PLINTO SUPERFICIALE
120	PLINTO SUPERFICIALE
121	PLINTO SUPERFICIALE
122	PLINTO SUPERFICIALE
123	PLINTO SUPERFICIALE
124	FONDAZIONE NASTRIFORME
125	CALCOLO DEI K DI WINKLER

Nodo	Tipo	Palo	Cmb	Quota	Fx	Fy	Fz	Mx	My	Mz
				m	kN	kN	kN	kN m	kN m	kN m
114	plinto su due pali y(rot. 90.00)	1	1	25.00	20.20	-2.95	-484.14	6.08	-42.55	0.27
		2	1	25.00	21.74	-2.95	-444.18	6.08	-44.61	0.27
		1	2	25.00	20.32	-2.93	-486.52	6.03	-42.80	0.28
		2	2	25.00	21.88	-2.93	-446.97	6.03	-44.89	0.28
		1	3	25.00	23.39	-4.52	-560.99	9.36	-49.11	0.25
		2	3	25.00	24.79	-4.52	-498.91	9.36	-51.00	0.25
		1	4	25.00	23.51	-4.50	-563.37	9.31	-49.37	0.26

Nodo	Tipo	Palo	Cmb	Quota	Fx	Fy	Fz	Mx	My	Mz
		2	4	25.00	24.93	-4.50	-501.70	9.31	-51.28	0.26
		1	5	25.00	15.06	-2.14	-361.39	4.41	-31.73	0.21
		2	5	25.00	16.23	-2.14	-332.43	4.41	-33.29	0.21
		1	6	25.00	15.18	-2.12	-363.78	4.36	-31.98	0.21
		2	6	25.00	16.37	-2.12	-335.22	4.36	-33.58	0.21
		1	7	25.00	18.25	-3.71	-438.24	7.69	-38.29	0.19
		2	7	25.00	19.28	-3.71	-387.16	7.69	-39.68	0.19
		1	8	25.00	18.37	-3.68	-440.63	7.64	-38.55	0.19
		2	8	25.00	19.42	-3.68	-389.95	7.64	-39.97	0.19
		1	9	25.00	20.44	-2.90	-488.91	5.98	-43.06	0.28
		2	9	25.00	22.02	-2.90	-449.77	5.98	-45.18	0.28
		1	10	25.00	22.43	-4.05	-537.93	8.38	-47.14	0.26
		2	10	25.00	23.88	-4.05	-482.49	8.38	-49.08	0.26
		1	11	25.00	22.67	-4.00	-542.70	8.27	-47.65	0.27
		2	11	25.00	24.16	-4.00	-488.07	8.27	-49.65	0.27
		1	12	25.00	15.29	-2.09	-366.16	4.30	-32.24	0.22
		2	12	25.00	16.51	-2.09	-338.02	4.30	-33.86	0.22
		1	13	25.00	17.29	-3.24	-415.19	6.71	-36.32	0.19
		2	13	25.00	18.37	-3.24	-370.74	6.71	-37.77	0.19
		1	14	25.00	17.53	-3.19	-419.96	6.60	-36.83	0.20
		2	14	25.00	18.65	-3.19	-376.32	6.60	-38.34	0.20
		1	15	25.00	8.71	-5.11	-413.36	8.50	-18.01	0.55
		2	15	25.00	11.78	-5.11	-382.29	8.50	-22.12	0.55
		1	16	25.00	7.35	-5.22	-387.01	7.24	-15.07	0.67
		2	16	25.00	11.07	-5.22	-382.63	7.24	-20.06	0.67
		1	17	25.00	25.32	-0.31	-397.26	4.20	-53.64	-0.27
		2	17	25.00	23.82	-0.31	-326.01	4.20	-51.63	-0.27
		1	18	25.00	23.95	-0.43	-370.91	2.94	-50.70	-0.15
		2	18	25.00	23.12	-0.43	-326.35	2.94	-49.58	-0.15
		1	19	25.00	8.67	-5.25	-410.31	8.53	-17.81	0.54
		2	19	25.00	11.67	-5.25	-382.47	8.53	-21.84	0.54
		1	20	25.00	7.40	-5.07	-390.06	7.21	-15.27	0.68
		2	20	25.00	11.18	-5.07	-382.45	7.21	-20.35	0.68
		1	21	25.00	25.27	-0.46	-394.21	4.23	-53.44	-0.28
		2	21	25.00	23.72	-0.46	-326.20	4.23	-51.35	-0.28
		1	22	25.00	24.00	-0.28	-373.96	2.92	-50.90	-0.14
		2	22	25.00	23.22	-0.28	-326.17	2.92	-49.86	-0.14
		1	23	25.00	6.54	-6.02	-407.12	9.03	-13.11	0.63
		2	23	25.00	10.06	-6.02	-388.99	9.03	-17.83	0.63
		1	24	25.00	5.17	-6.14	-380.77	7.78	-10.16	0.75
		2	24	25.00	9.36	-6.14	-389.32	7.78	-15.77	0.75
		1	25	25.00	27.49	0.60	-403.49	3.67	-58.55	-0.35
		2	25	25.00	25.54	0.60	-319.32	3.67	-55.93	-0.35
		1	26	25.00	26.13	0.48	-377.14	2.41	-55.60	-0.23
		2	26	25.00	24.84	0.48	-319.66	2.41	-53.87	-0.23
		1	27	25.00	6.49	-6.17	-404.07	9.06	-12.90	0.62
		2	27	25.00	9.95	-6.17	-389.17	9.06	-17.55	0.62
		1	28	25.00	5.22	-5.99	-383.82	7.75	-10.36	0.76
		2	28	25.00	9.46	-5.99	-389.14	7.75	-16.05	0.76
		1	29	25.00	27.45	0.45	-400.44	3.70	-58.34	-0.36
		2	29	25.00	25.44	0.45	-319.50	3.70	-55.65	-0.36
		1	30	25.00	26.18	0.63	-380.19	2.38	-55.80	-0.22
		2	30	25.00	24.94	0.63	-319.48	2.38	-54.15	-0.22
		1	31	25.00	16.12	-3.29	-438.46	8.47	-33.92	0.12
		2	31	25.00	16.82	-3.29	-362.20	8.47	-34.86	0.12
		1	32	25.00	11.57	-3.68	-350.63	4.27	-24.10	0.52
		2	32	25.00	14.47	-3.68	-363.33	4.27	-27.99	0.52
		1	33	25.00	21.10	-1.85	-433.63	7.18	-44.61	-0.12
		2	33	25.00	20.43	-1.85	-345.32	7.18	-43.71	-0.12
		1	34	25.00	16.55	-2.25	-345.80	2.98	-34.79	0.27
		2	34	25.00	18.08	-2.25	-346.45	2.98	-36.84	0.27
		1	35	25.00	15.47	-3.56	-436.59	8.63	-32.45	0.15
		2	35	25.00	16.30	-3.56	-364.21	8.63	-33.57	0.15
		1	36	25.00	10.91	-3.96	-348.76	4.43	-22.63	0.54
		2	36	25.00	13.95	-3.96	-365.34	4.43	-26.70	0.54
		1	37	25.00	21.75	-1.58	-435.51	7.02	-46.08	-0.14
		2	37	25.00	20.95	-1.58	-343.31	7.02	-45.00	-0.14
		1	38	25.00	17.20	-1.97	-347.67	2.82	-36.26	0.25
		2	38	25.00	18.60	-1.97	-344.44	2.82	-38.13	0.25
		1	39	25.00	15.96	-3.79	-428.30	8.56	-33.24	0.09
		2	39	25.00	16.46	-3.79	-362.80	8.56	-33.92	0.09
		1	40	25.00	11.73	-3.19	-360.80	4.17	-24.78	0.55
		2	40	25.00	14.82	-3.19	-362.72	4.17	-28.93	0.55

Nodo	Tipo	Palo	Cmb	Quota	Fx	Fy	Fz	Mx	My	Mz
		1	41	25.00	20.94	-2.35	-423.47	7.27	-43.93	-0.15
		2	41	25.00	20.08	-2.35	-345.92	7.27	-42.77	-0.15
		1	42	25.00	16.71	-1.75	-355.97	2.88	-35.46	0.31
		2	42	25.00	18.43	-1.75	-345.84	2.88	-37.78	0.31
		1	43	25.00	15.31	-4.06	-426.43	8.72	-31.77	0.11
		2	43	25.00	15.95	-4.06	-364.81	8.72	-32.63	0.11
		1	44	25.00	11.07	-3.46	-358.93	4.33	-23.30	0.58
		2	44	25.00	14.31	-3.46	-364.73	4.33	-27.64	0.58
		1	45	25.00	21.59	-2.08	-425.34	7.11	-45.40	-0.18
		2	45	25.00	20.59	-2.08	-343.91	7.11	-44.06	-0.18
		1	46	25.00	17.36	-1.47	-357.84	2.72	-36.94	0.28
		2	46	25.00	18.95	-1.47	-343.83	2.72	-39.07	0.28
		1	47	25.00	31.14	1.78	-385.58	1.91	-66.36	-0.50
		2	47	25.00	28.32	1.78	-304.72	1.91	-62.57	-0.50
		1	48	25.00	1.52	-7.32	-398.69	9.54	-2.35	0.90
		2	48	25.00	6.58	-7.32	-403.93	9.54	-9.13	0.90
		1	49	25.00	13.59	-2.50	-330.42	2.07	-28.79	0.53
		2	49	25.00	16.55	-2.50	-354.56	2.07	-32.76	0.53
		1	50	25.00	19.07	-3.03	-453.85	9.37	-39.92	-0.13
		2	50	25.00	18.35	-3.03	-354.09	9.37	-38.94	-0.13
118	Plinto su tre pali	1	1	25.00	2.09	2.94	-402.09	-5.07	-3.70	0.42
		2	1	25.00	0.06	1.77	-392.27	-3.49	-0.98	0.42
		3	1	25.00	2.09	0.60	-418.93	-1.92	-3.70	0.42
		1	2	25.00	2.09	2.94	-404.41	-5.06	-3.70	0.42
		2	2	25.00	0.06	1.76	-394.55	-3.49	-0.97	0.42
		3	2	25.00	2.09	0.59	-421.21	-1.91	-3.70	0.42
		1	3	25.00	1.96	3.86	-446.29	-6.68	-3.33	0.52
		2	3	25.00	-0.54	2.42	-428.45	-4.75	0.02	0.52
		3	3	25.00	1.96	0.98	-459.51	-2.81	-3.33	0.52
		1	4	25.00	1.96	3.86	-448.62	-6.68	-3.33	0.52
		2	4	25.00	-0.54	2.41	-430.74	-4.74	0.03	0.52
		3	4	25.00	1.96	0.97	-461.79	-2.80	-3.33	0.52
		1	5	25.00	1.61	2.18	-302.74	-3.76	-2.86	0.31
		2	5	25.00	0.11	1.32	-295.78	-2.60	-0.86	0.31
		3	5	25.00	1.61	0.45	-315.95	-1.44	-2.86	0.31
		1	6	25.00	1.61	2.18	-305.06	-3.75	-2.86	0.31
		2	6	25.00	0.11	1.31	-298.06	-2.59	-0.85	0.31
		3	6	25.00	1.61	0.44	-318.23	-1.43	-2.86	0.31
		1	7	25.00	1.48	3.10	-346.94	-5.37	-2.49	0.41
		2	7	25.00	-0.49	1.96	-331.96	-3.85	0.15	0.41
		3	7	25.00	1.48	0.83	-356.53	-2.33	-2.49	0.41
		1	8	25.00	1.48	3.10	-349.27	-5.37	-2.49	0.41
		2	8	25.00	-0.49	1.96	-334.25	-3.84	0.15	0.41
		3	8	25.00	1.48	0.82	-358.81	-2.32	-2.49	0.41
		1	9	25.00	2.09	2.94	-406.74	-5.06	-3.70	0.42
		2	9	25.00	0.06	1.76	-396.84	-3.48	-0.97	0.42
		3	9	25.00	2.09	0.58	-423.49	-1.90	-3.70	0.42
		1	10	25.00	2.00	3.59	-433.03	-6.20	-3.44	0.49
		2	10	25.00	-0.36	2.22	-417.60	-4.37	-0.28	0.49
		3	10	25.00	2.00	0.86	-447.33	-2.54	-3.44	0.49
		1	11	25.00	2.00	3.58	-437.68	-6.19	-3.44	0.49
		2	11	25.00	-0.36	2.21	-422.17	-4.36	-0.27	0.49
		3	11	25.00	2.00	0.85	-451.89	-2.53	-3.44	0.49
		1	12	25.00	1.61	2.17	-307.39	-3.75	-2.86	0.31
		2	12	25.00	0.11	1.31	-300.35	-2.59	-0.84	0.31
		3	12	25.00	1.61	0.44	-320.51	-1.42	-2.86	0.31
		1	13	25.00	1.52	2.82	-333.68	-4.89	-2.60	0.38
		2	13	25.00	-0.31	1.77	-321.11	-3.47	-0.16	0.38
		3	13	25.00	1.52	0.72	-344.36	-2.06	-2.60	0.38
		1	14	25.00	1.52	2.82	-338.33	-4.88	-2.60	0.38
		2	14	25.00	-0.31	1.76	-325.68	-3.46	-0.14	0.38
		3	14	25.00	1.52	0.70	-348.92	-2.04	-2.60	0.38
		1	15	25.00	-9.16	-3.04	-447.35	5.62	23.97	0.53
		2	15	25.00	-11.72	-4.52	-362.57	7.61	27.41	0.53
		3	15	25.00	-9.16	-6.00	-227.46	9.60	23.97	0.53
		1	16	25.00	-9.87	4.50	-496.65	-11.98	26.97	0.61
		2	16	25.00	-12.82	2.80	-270.67	-9.69	30.93	0.61
		3	16	25.00	-9.87	1.09	-238.22	-7.41	26.97	0.61
		1	17	25.00	12.98	0.59	-144.19	3.17	-32.40	0.09
		2	17	25.00	12.56	0.35	-349.83	3.49	-31.84	0.09
		3	17	25.00	12.98	0.11	-426.15	3.82	-32.40	0.09
		1	18	25.00	12.27	8.14	-193.49	-14.43	-29.40	0.17
		2	18	25.00	11.47	7.67	-257.94	-13.81	-28.32	0.17

Nodo	Tipo	Palo	Cmb	Quota	Fx	Fy	Fz	Mx	My	Mz
		3	18	25.00	12.27	7.21	-436.90	-13.19	-29.40	0.17
		1	19	25.00	-11.07	-2.49	-467.50	4.07	28.25	0.50
		2	19	25.00	-13.50	-3.90	-353.28	5.95	31.51	0.50
		3	19	25.00	-11.07	-5.30	-215.44	7.84	28.25	0.50
		1	20	25.00	-7.95	3.95	-476.50	-10.42	22.69	0.64
		2	20	25.00	-11.04	2.17	-279.96	-8.03	26.83	0.64
		3	20	25.00	-7.95	0.39	-250.24	-5.65	22.69	0.64
		1	21	25.00	11.07	1.14	-164.34	1.62	-28.12	0.06
		2	21	25.00	10.78	0.98	-340.55	1.84	-27.74	0.06
		3	21	25.00	11.07	0.81	-414.12	2.06	-28.12	0.06
		1	22	25.00	14.18	7.59	-173.33	-12.87	-33.68	0.19
		2	22	25.00	13.25	7.05	-267.22	-12.15	-32.42	0.19
		3	22	25.00	14.18	6.51	-448.92	-11.43	-33.68	0.19
		1	23	25.00	-12.72	-2.00	-507.16	1.88	33.46	0.52
		2	23	25.00	-15.26	-3.47	-339.78	3.85	36.87	0.52
		3	23	25.00	-12.72	-4.94	-198.66	5.82	33.46	0.52
		1	24	25.00	-13.43	5.54	-556.45	-15.72	36.46	0.60
		2	24	25.00	-16.36	3.85	-247.89	-13.45	40.39	0.60
		3	24	25.00	-13.43	2.16	-209.41	-11.18	36.46	0.60
		1	25	25.00	16.55	-0.44	-84.39	6.91	-41.89	0.09
		2	25	25.00	16.11	-0.70	-372.61	7.25	-41.30	0.09
		3	25	25.00	16.55	-0.95	-454.95	7.59	-41.89	0.09
		1	26	25.00	15.84	7.10	-133.68	-10.69	-38.89	0.17
		2	26	25.00	15.01	6.62	-280.72	-10.05	-37.79	0.17
		3	26	25.00	15.84	6.15	-465.71	-9.41	-38.89	0.17
		1	27	25.00	-14.64	-1.45	-527.31	0.33	37.74	0.50
		2	27	25.00	-17.05	-2.85	-330.50	2.19	40.97	0.50
		3	27	25.00	-14.64	-4.24	-186.63	4.06	37.74	0.50
		1	28	25.00	-11.52	4.99	-536.30	-14.16	32.19	0.63
		2	28	25.00	-14.58	3.22	-257.17	-11.79	36.29	0.63
		3	28	25.00	-11.52	1.46	-221.43	-9.42	32.19	0.63
		1	29	25.00	14.63	0.11	-104.54	5.36	-37.62	0.06
		2	29	25.00	14.33	-0.07	-363.33	5.59	-37.20	0.06
		3	29	25.00	14.63	-0.25	-442.93	5.83	-37.62	0.06
		1	30	25.00	17.75	6.55	-113.53	-9.13	-43.17	0.20
		2	30	25.00	16.79	6.00	-290.00	-8.39	-41.89	0.20
		3	30	25.00	17.75	5.45	-477.73	-7.65	-43.17	0.20
		1	31	25.00	-0.58	-10.57	-283.74	25.30	0.74	0.28
		2	31	25.00	-1.94	-11.36	-465.32	26.35	2.57	0.28
		3	31	25.00	-0.58	-12.14	-284.45	27.41	0.74	0.28
		1	32	25.00	-2.95	14.57	-448.05	-33.37	10.74	0.55
		2	32	25.00	-5.60	13.04	-159.00	-31.32	14.30	0.55
		3	32	25.00	-2.95	11.51	-320.31	-29.27	10.74	0.55
		1	33	25.00	6.06	-9.48	-192.79	24.56	-16.17	0.15
		2	33	25.00	5.34	-9.89	-461.50	25.12	-15.21	0.15
		3	33	25.00	6.06	-10.31	-344.06	25.68	-16.17	0.15
		1	34	25.00	3.69	15.66	-357.10	-34.10	-6.17	0.41
		2	34	25.00	1.69	14.51	-155.18	-32.55	-3.48	0.41
		3	34	25.00	3.69	13.35	-379.91	-31.00	-6.17	0.41
		1	35	25.00	-1.65	-10.26	-301.68	24.18	3.59	0.28
		2	35	25.00	-3.01	-11.04	-458.48	25.23	5.41	0.28
		3	35	25.00	-1.65	-11.82	-275.81	26.28	3.59	0.28
		1	36	25.00	-4.02	14.88	-465.99	-34.49	13.59	0.55
		2	36	25.00	-6.66	13.36	-152.17	-32.44	17.14	0.55
		3	36	25.00	-4.02	11.83	-311.66	-30.40	13.59	0.55
		1	37	25.00	7.13	-9.79	-174.85	25.69	-19.02	0.15
		2	37	25.00	6.41	-10.21	-468.33	26.25	-18.05	0.15
		3	37	25.00	7.13	-10.63	-352.70	26.81	-19.02	0.15
		1	38	25.00	4.76	15.35	-339.16	-32.98	-9.02	0.42
		2	38	25.00	2.75	14.19	-162.02	-31.42	-6.32	0.42
		3	38	25.00	4.76	13.03	-388.55	-29.87	-9.02	0.42
		1	39	25.00	-6.96	-8.74	-350.91	20.11	15.00	0.19
		2	39	25.00	-7.88	-9.27	-434.37	20.83	16.24	0.19
		3	39	25.00	-6.96	-9.81	-244.38	21.54	15.00	0.19
		1	40	25.00	3.43	12.74	-380.88	-28.18	-3.51	0.64
		2	40	25.00	0.34	10.96	-189.95	-25.79	0.63	0.64
		3	40	25.00	3.43	9.18	-360.38	-23.40	-3.51	0.64
		1	41	25.00	-0.32	-7.65	-259.96	19.38	-1.91	0.06
		2	41	25.00	-0.60	-7.81	-430.55	19.59	-1.54	0.06
		3	41	25.00	-0.32	-7.97	-303.99	19.81	-1.91	0.06
		1	42	25.00	10.07	13.83	-289.93	-28.92	-20.43	0.50
		2	42	25.00	7.63	12.42	-186.13	-27.03	-17.15	0.50
		3	42	25.00	10.07	11.01	-419.98	-25.13	-20.43	0.50

Nodo	Tipo	Palo	Cmb	Quota	Fx	Fy	Fz	Mx	My	Mz
		1	43	25.00	-8.03	-8.43	-368.85	18.99	17.84	0.19
		2	43	25.00	-8.95	-8.96	-427.54	19.70	19.08	0.19
		3	43	25.00	-8.03	-9.49	-235.74	20.41	17.84	0.19
		1	44	25.00	2.36	13.05	-398.82	-29.31	-0.67	0.64
		2	44	25.00	-0.72	11.28	-183.12	-26.92	3.47	0.64
		3	44	25.00	2.36	9.50	-351.73	-24.53	-0.67	0.64
		1	45	25.00	0.75	-7.96	-242.02	20.50	-4.76	0.06
		2	45	25.00	0.47	-8.12	-437.39	20.72	-4.38	0.06
		3	45	25.00	0.75	-8.29	-312.63	20.94	-4.76	0.06
		1	46	25.00	11.14	13.52	-271.99	-27.80	-23.27	0.51
		2	46	25.00	8.69	12.11	-192.97	-25.90	-19.99	0.51
		3	46	25.00	11.14	10.69	-428.62	-24.00	-23.27	0.51
		1	47	25.00	22.00	4.60	-31.23	-3.24	-55.13	0.01
		2	47	25.00	21.94	4.57	-319.90	-3.20	-55.06	0.01
		3	47	25.00	22.00	4.54	-513.21	-3.16	-55.13	0.01
		1	48	25.00	-18.88	0.50	-609.61	-5.56	49.70	0.68
		2	48	25.00	-22.20	-1.42	-300.60	-3.00	54.14	0.68
		3	48	25.00	-18.88	-3.33	-151.15	-0.43	49.70	0.68
		1	49	25.00	6.61	21.31	-379.86	-47.29	-10.55	0.62
		2	49	25.00	3.58	19.56	-90.82	-44.94	-6.48	0.62
		3	49	25.00	6.61	17.81	-411.40	-42.60	-10.55	0.62
		1	50	25.00	-3.50	-16.21	-260.98	38.48	5.12	0.07
		2	50	25.00	-3.84	-16.41	-529.69	38.75	5.57	0.07
		3	50	25.00	-3.50	-16.60	-252.97	39.01	5.12	0.07
121	plinto su due pali	1	1	25.00	9.65	34.91	-565.58	-72.19	-20.26	0.12
		2	1	25.00	9.65	34.08	-682.46	-71.08	-20.26	0.12
		1	2	25.00	9.79	35.21	-570.98	-72.82	-20.55	0.12
		2	2	25.00	9.79	34.38	-689.47	-71.70	-20.55	0.12
		1	3	25.00	10.98	45.55	-663.11	-94.21	-23.07	0.14
		2	3	25.00	10.98	44.58	-796.36	-92.92	-23.07	0.14
		1	4	25.00	11.12	45.85	-668.51	-94.83	-23.35	0.14
		2	4	25.00	11.12	44.88	-803.37	-93.54	-23.35	0.14
		1	5	25.00	7.15	25.42	-419.40	-52.56	-15.00	0.09
		2	5	25.00	7.15	24.80	-505.92	-51.73	-15.00	0.09
		1	6	25.00	7.28	25.72	-424.80	-53.18	-15.28	0.09
		2	6	25.00	7.28	25.10	-512.94	-52.35	-15.28	0.09
		1	7	25.00	8.48	36.05	-516.93	-74.58	-17.81	0.11
		2	7	25.00	8.48	35.30	-619.83	-73.57	-17.81	0.11
		1	8	25.00	8.61	36.35	-522.34	-75.20	-18.09	0.11
		2	8	25.00	8.61	35.60	-626.84	-74.19	-18.09	0.11
		1	9	25.00	9.92	35.51	-576.38	-73.44	-20.83	0.13
		2	9	25.00	9.92	34.68	-696.48	-72.32	-20.83	0.13
		1	10	25.00	10.59	42.36	-633.85	-87.61	-22.23	0.14
		2	10	25.00	10.59	41.43	-762.19	-86.37	-22.23	0.14
		1	11	25.00	10.86	42.96	-644.66	-88.85	-22.79	0.14
		2	11	25.00	10.86	42.03	-776.21	-87.61	-22.79	0.14
		1	12	25.00	7.42	26.02	-430.21	-53.81	-15.57	0.09
		2	12	25.00	7.42	25.39	-519.95	-52.97	-15.57	0.09
		1	13	25.00	8.08	32.86	-487.67	-67.97	-16.97	0.11
		2	13	25.00	8.08	32.15	-585.66	-67.02	-16.97	0.11
		1	14	25.00	8.35	33.46	-498.48	-69.22	-17.53	0.11
		2	14	25.00	8.35	32.75	-599.68	-68.26	-17.53	0.11
		1	15	25.00	8.12	27.51	-477.12	-57.11	-13.89	0.19
		2	15	25.00	8.12	26.20	-525.42	-55.36	-13.89	0.19
		1	16	25.00	8.61	32.38	-468.31	-67.38	-13.77	0.38
		2	16	25.00	8.61	29.83	-504.45	-63.98	-13.77	0.38
		1	17	25.00	6.75	26.97	-448.51	-55.35	-18.48	-0.18
		2	17	25.00	6.75	28.17	-598.52	-56.95	-18.48	-0.18
		1	18	25.00	7.24	31.84	-439.70	-65.63	-18.36	6.50e-03
		2	18	25.00	7.24	31.80	-577.55	-65.57	-18.36	6.50e-03
		1	19	25.00	8.26	27.57	-477.59	-57.34	-13.90	0.19
		2	19	25.00	8.26	26.30	-523.11	-55.64	-13.90	0.19
		1	20	25.00	8.47	32.31	-467.85	-67.14	-13.76	0.38
		2	20	25.00	8.47	29.73	-506.77	-63.70	-13.76	0.38
		1	21	25.00	6.89	27.04	-448.98	-55.59	-18.49	-0.18
		2	21	25.00	6.89	28.27	-596.21	-57.23	-18.49	-0.18
		1	22	25.00	7.10	31.78	-439.24	-65.39	-18.35	0.01
		2	22	25.00	7.10	31.70	-579.87	-65.29	-18.35	0.01
		1	23	25.00	8.67	27.95	-481.20	-58.32	-13.44	0.24
		2	23	25.00	8.67	26.35	-510.64	-56.18	-13.44	0.24
		1	24	25.00	9.16	32.82	-472.39	-68.59	-13.32	0.42
		2	24	25.00	9.16	29.97	-489.68	-64.79	-13.32	0.42
		1	25	25.00	6.20	26.53	-444.43	-54.14	-18.93	-0.22

Nodo	Tipo	Palo	Cmb	Quota	Fx	Fy	Fz	Mx	My	Mz
		2	25	25.00	6.20	28.03	-613.30	-56.14	-18.93	-0.22
		1	26	25.00	6.69	31.40	-435.63	-64.41	-18.82	-0.04
		2	26	25.00	6.69	31.65	-592.33	-64.75	-18.82	-0.04
		1	27	25.00	8.81	28.02	-481.66	-58.55	-13.45	0.23
		2	27	25.00	8.81	26.44	-508.33	-56.45	-13.45	0.23
		1	28	25.00	9.02	32.75	-471.93	-68.36	-13.31	0.43
		2	28	25.00	9.02	29.87	-491.99	-64.51	-13.31	0.43
		1	29	25.00	6.34	26.60	-444.90	-54.37	-18.95	-0.23
		2	29	25.00	6.34	28.13	-610.98	-56.41	-18.95	-0.23
		1	30	25.00	6.55	31.33	-435.16	-64.18	-18.80	-0.03
		2	30	25.00	6.55	31.56	-594.64	-64.48	-18.80	-0.03
		1	31	25.00	7.07	21.64	-477.38	-44.51	-15.63	-0.15
		2	31	25.00	7.07	22.66	-575.46	-45.87	-15.63	-0.15
		1	32	25.00	8.70	37.87	-448.03	-78.75	-15.24	0.46
		2	32	25.00	8.70	34.75	-505.58	-74.58	-15.24	0.46
		1	33	25.00	6.66	21.48	-468.80	-43.98	-17.01	-0.26
		2	33	25.00	6.66	23.25	-597.39	-46.34	-17.01	-0.26
		1	34	25.00	8.29	37.71	-439.44	-78.23	-16.62	0.35
		2	34	25.00	8.29	35.34	-527.51	-75.06	-16.62	0.35
		1	35	25.00	7.24	21.78	-478.60	-44.87	-15.50	-0.14
		2	35	25.00	7.24	22.71	-571.03	-46.11	-15.50	-0.14
		1	36	25.00	8.86	38.00	-449.25	-79.12	-15.11	0.48
		2	36	25.00	8.86	34.79	-501.15	-74.83	-15.11	0.48
		1	37	25.00	6.50	21.35	-467.58	-43.62	-17.15	-0.28
		2	37	25.00	6.50	23.21	-601.83	-46.10	-17.15	-0.28
		1	38	25.00	8.12	37.57	-438.22	-77.86	-16.76	0.34
		2	38	25.00	8.12	35.29	-531.94	-74.82	-16.76	0.34
		1	39	25.00	7.54	21.86	-478.93	-45.29	-15.68	-0.17
		2	39	25.00	7.54	22.99	-567.76	-46.79	-15.68	-0.17
		1	40	25.00	8.23	37.65	-446.47	-77.97	-15.20	0.48
		2	40	25.00	8.23	34.42	-513.29	-73.66	-15.20	0.48
		1	41	25.00	7.13	21.70	-470.35	-44.76	-17.05	-0.28
		2	41	25.00	7.13	23.58	-589.69	-47.27	-17.05	-0.28
		1	42	25.00	7.82	37.49	-437.89	-77.45	-16.58	0.37
		2	42	25.00	7.82	35.01	-535.22	-74.14	-16.58	0.37
		1	43	25.00	7.71	21.99	-480.16	-45.65	-15.54	-0.15
		2	43	25.00	7.71	23.03	-563.32	-47.03	-15.54	-0.15
		1	44	25.00	8.39	37.78	-447.70	-78.34	-15.06	0.49
		2	44	25.00	8.39	34.46	-508.85	-73.90	-15.06	0.49
		1	45	25.00	6.97	21.57	-469.13	-44.40	-17.19	-0.29
		2	45	25.00	6.97	23.54	-594.12	-47.02	-17.19	-0.29
		1	46	25.00	7.65	37.36	-436.67	-77.08	-16.71	0.36
		2	46	25.00	7.65	34.97	-539.65	-73.89	-16.71	0.36
		1	47	25.00	6.12	28.89	-432.49	-58.97	-20.11	-0.23
		2	47	25.00	6.12	30.42	-621.73	-61.01	-20.11	-0.23
		1	48	25.00	9.24	30.46	-484.34	-63.77	-12.14	0.43
		2	48	25.00	9.24	27.58	-481.25	-59.92	-12.14	0.43
		1	49	25.00	8.53	42.48	-430.91	-88.11	-16.05	0.60
		2	49	25.00	8.53	38.42	-504.83	-82.70	-16.05	0.60
		1	50	25.00	6.83	16.87	-485.91	-34.62	-16.20	-0.40
		2	50	25.00	6.83	19.58	-598.14	-38.22	-16.20	-0.40
122	plinto su due pali	1	1	25.00	7.68	35.23	-588.85	-73.12	-16.10	0.04
		2	1	25.00	7.68	34.99	-681.59	-72.80	-16.10	0.04
		1	2	25.00	7.80	35.54	-594.50	-73.77	-16.36	0.04
		2	2	25.00	7.80	35.29	-688.69	-73.43	-16.36	0.04
		1	3	25.00	8.72	46.21	-691.73	-95.87	-18.24	0.06
		2	3	25.00	8.72	45.82	-796.40	-95.34	-18.24	0.06
		1	4	25.00	8.84	46.52	-697.38	-96.51	-18.49	0.06
		2	4	25.00	8.84	46.13	-803.50	-95.98	-18.49	0.06
		1	5	25.00	5.68	25.64	-436.84	-53.22	-11.92	0.02
		2	5	25.00	5.68	25.48	-505.55	-53.00	-11.92	0.02
		1	6	25.00	5.80	25.95	-442.49	-53.87	-12.17	0.03
		2	6	25.00	5.80	25.78	-512.65	-53.64	-12.17	0.03
		1	7	25.00	6.72	36.62	-539.71	-75.97	-14.06	0.05
		2	7	25.00	6.72	36.31	-620.36	-75.55	-14.06	0.05
		1	8	25.00	6.84	36.93	-545.36	-76.61	-14.31	0.05
		2	8	25.00	6.84	36.61	-627.46	-76.19	-14.31	0.05
		1	9	25.00	7.92	35.85	-600.16	-74.41	-16.61	0.04
		2	9	25.00	7.92	35.60	-695.79	-74.07	-16.61	0.04
		1	10	25.00	8.41	42.92	-660.86	-89.04	-17.60	0.05
		2	10	25.00	8.41	42.57	-761.96	-88.58	-17.60	0.05
		1	11	25.00	8.64	43.54	-672.17	-90.33	-18.10	0.05
		2	11	25.00	8.64	43.18	-776.16	-89.86	-18.10	0.05

Nodo	Tipo	Palo	Cmb	Quota	Fx	Fy	Fz	Mx	My	Mz
		1	12	25.00	5.92	26.26	-448.14	-54.51	-12.43	0.03
		2	12	25.00	5.92	26.09	-519.75	-54.28	-12.43	0.03
		1	13	25.00	6.41	33.33	-508.85	-69.14	-13.42	0.04
		2	13	25.00	6.41	33.06	-585.92	-68.78	-13.42	0.04
		1	14	25.00	6.65	33.95	-520.16	-70.43	-13.92	0.04
		2	14	25.00	6.65	33.67	-600.12	-70.06	-13.92	0.04
		1	15	25.00	6.65	28.92	-514.21	-59.47	-11.02	0.22
		2	15	25.00	6.65	27.44	-548.07	-57.49	-11.02	0.22
		1	16	25.00	6.94	33.85	-506.27	-69.26	-10.84	0.47
		2	16	25.00	6.94	30.68	-531.13	-65.04	-10.84	0.47
		1	17	25.00	5.25	26.22	-449.70	-55.38	-14.72	-0.40
		2	17	25.00	5.25	28.93	-571.82	-59.00	-14.72	-0.40
		1	18	25.00	5.55	31.14	-441.76	-65.18	-14.54	-0.15
		2	18	25.00	5.55	32.17	-554.87	-66.55	-14.54	-0.15
		1	19	25.00	6.76	28.63	-516.35	-58.88	-11.04	0.21
		2	19	25.00	6.76	27.25	-548.22	-57.04	-11.04	0.21
		1	20	25.00	6.83	34.14	-504.12	-69.85	-10.82	0.49
		2	20	25.00	6.83	30.88	-530.97	-65.50	-10.82	0.49
		1	21	25.00	5.36	25.93	-451.85	-54.79	-14.74	-0.42
		2	21	25.00	5.36	28.74	-571.97	-58.54	-14.74	-0.42
		1	22	25.00	5.44	31.44	-439.62	-65.76	-14.52	-0.14
		2	22	25.00	5.44	32.37	-554.72	-67.00	-14.52	-0.14
		1	23	25.00	7.23	28.35	-526.24	-58.08	-10.81	0.28
		2	23	25.00	7.23	26.48	-544.57	-55.58	-10.81	0.28
		1	24	25.00	7.52	33.27	-518.29	-67.88	-10.64	0.53
		2	24	25.00	7.52	29.72	-527.62	-63.14	-10.64	0.53
		1	25	25.00	4.67	26.80	-437.68	-56.77	-14.92	-0.46
		2	25	25.00	4.67	29.89	-575.32	-60.90	-14.92	-0.46
		1	26	25.00	4.97	31.72	-429.74	-66.56	-14.75	-0.21
		2	26	25.00	4.97	33.14	-558.38	-68.46	-14.75	-0.21
		1	27	25.00	7.34	28.06	-528.38	-57.49	-10.83	0.26
		2	27	25.00	7.34	26.29	-544.72	-55.13	-10.83	0.26
		1	28	25.00	7.41	33.56	-516.15	-68.46	-10.61	0.54
		2	28	25.00	7.41	29.92	-527.47	-63.59	-10.61	0.54
		1	29	25.00	4.78	26.50	-439.82	-56.18	-14.94	-0.48
		2	29	25.00	4.78	29.70	-575.48	-60.45	-14.94	-0.48
		1	30	25.00	4.86	32.01	-427.59	-67.15	-14.72	-0.20
		2	30	25.00	4.86	33.33	-558.23	-68.91	-14.72	-0.20
		1	31	25.00	5.82	22.24	-500.90	-46.60	-12.51	-0.29
		2	31	25.00	5.82	24.18	-576.15	-49.20	-12.51	-0.29
		1	32	25.00	6.80	38.64	-474.42	-79.27	-11.93	0.54
		2	32	25.00	6.80	34.99	-519.67	-74.39	-11.93	0.54
		1	33	25.00	5.40	21.43	-481.55	-45.38	-13.62	-0.48
		2	33	25.00	5.40	24.63	-583.28	-49.66	-13.62	-0.48
		1	34	25.00	6.38	37.83	-455.07	-78.04	-13.04	0.36
		2	34	25.00	6.38	35.43	-526.79	-74.84	-13.04	0.36
		1	35	25.00	5.99	22.06	-504.51	-46.19	-12.45	-0.27
		2	35	25.00	5.99	23.89	-575.10	-48.63	-12.45	-0.27
		1	36	25.00	6.97	38.47	-478.03	-78.85	-11.87	0.56
		2	36	25.00	6.97	34.70	-518.61	-73.81	-11.87	0.56
		1	37	25.00	5.22	21.60	-477.94	-45.79	-13.69	-0.49
		2	37	25.00	5.22	24.92	-584.33	-50.23	-13.69	-0.49
		1	38	25.00	6.21	38.00	-451.46	-78.46	-13.10	0.34
		2	38	25.00	6.21	35.72	-527.84	-75.41	-13.10	0.34
		1	39	25.00	6.19	21.26	-508.05	-44.65	-12.59	-0.34
		2	39	25.00	6.19	23.54	-576.66	-47.70	-12.59	-0.34
		1	40	25.00	6.43	39.62	-467.28	-81.22	-11.86	0.59
		2	40	25.00	6.43	35.63	-519.16	-75.89	-11.86	0.59
		1	41	25.00	5.77	20.45	-488.69	-43.42	-13.70	-0.53
		2	41	25.00	5.77	23.99	-583.78	-48.15	-13.70	-0.53
		1	42	25.00	6.01	38.81	-447.93	-79.99	-12.97	0.41
		2	42	25.00	6.01	36.08	-526.28	-76.34	-12.97	0.41
		1	43	25.00	6.36	21.09	-511.65	-44.23	-12.53	-0.32
		2	43	25.00	6.36	23.25	-575.61	-47.13	-12.53	-0.32
		1	44	25.00	6.60	39.45	-470.88	-80.80	-11.80	0.61
		2	44	25.00	6.60	35.34	-518.11	-75.32	-11.80	0.61
		1	45	25.00	5.59	20.62	-485.09	-43.84	-13.76	-0.54
		2	45	25.00	5.59	24.28	-584.84	-48.72	-13.76	-0.54
		1	46	25.00	5.84	38.98	-444.32	-80.41	-13.03	0.39
		2	46	25.00	5.84	36.36	-527.34	-76.91	-13.03	0.39
		1	47	25.00	4.48	27.73	-416.82	-58.83	-15.84	-0.50
		2	47	25.00	4.48	31.09	-572.93	-63.31	-15.84	-0.50
		1	48	25.00	7.71	32.33	-539.15	-65.81	-9.72	0.57

Nodo	Tipo	Palo	Cmb	Quota	Fx	Fy	Fz	Mx	My	Mz
		2	48	25.00	7.71	28.53	-530.01	-60.73	-9.72	0.57
		1	49	25.00	6.23	43.85	-448.75	-89.83	-12.13	0.73
		2	49	25.00	6.23	38.91	-509.24	-83.24	-12.13	0.73
		1	50	25.00	5.97	16.22	-507.22	-34.82	-13.42	-0.67
		2	50	25.00	5.97	20.70	-593.71	-40.80	-13.42	-0.67
125	Plinto su tre pali	1	1	25.00	-3.61	0.93	-437.03	-2.55	6.82	-0.38
		2	1	25.00	-1.75	2.01	-397.21	-3.99	4.33	-0.38
		3	1	25.00	-3.61	3.08	-399.73	-5.44	6.82	-0.38
		1	2	25.00	-3.60	0.94	-439.31	-2.56	6.81	-0.38
		2	2	25.00	-1.74	2.01	-399.50	-4.00	4.31	-0.38
		3	2	25.00	-3.60	3.08	-402.18	-5.44	6.81	-0.38
		1	3	25.00	-4.08	1.40	-483.87	-3.63	7.76	-0.49
		2	3	25.00	-1.70	2.78	-433.94	-5.47	4.56	-0.49
		3	3	25.00	-4.08	4.15	-440.99	-7.32	7.76	-0.49
		1	4	25.00	-4.08	1.40	-486.15	-3.64	7.74	-0.49
		2	4	25.00	-1.70	2.78	-436.22	-5.48	4.55	-0.49
		3	4	25.00	-4.08	4.15	-443.44	-7.32	7.74	-0.49
		1	5	25.00	-2.71	0.70	-329.00	-1.91	5.12	-0.28
		2	5	25.00	-1.36	1.49	-299.28	-2.96	3.31	-0.28
		3	5	25.00	-2.71	2.27	-301.00	-4.01	5.12	-0.28
		1	6	25.00	-2.70	0.70	-331.28	-1.91	5.11	-0.28
		2	6	25.00	-1.35	1.48	-301.56	-2.96	3.29	-0.28
		3	6	25.00	-2.70	2.27	-303.45	-4.01	5.11	-0.28
		1	7	25.00	-3.19	1.17	-375.83	-2.99	6.06	-0.39
		2	7	25.00	-1.31	2.25	-336.00	-4.44	3.55	-0.39
		3	7	25.00	-3.19	3.34	-342.26	-5.89	6.06	-0.39
		1	8	25.00	-3.18	1.17	-378.12	-2.99	6.04	-0.39
		2	8	25.00	-1.31	2.25	-338.29	-4.44	3.53	-0.39
		3	8	25.00	-3.18	3.33	-344.71	-5.89	6.04	-0.39
		1	9	25.00	-3.59	0.94	-441.60	-2.56	6.79	-0.38
		2	9	25.00	-1.74	2.01	-401.79	-4.00	4.30	-0.38
		3	9	25.00	-3.59	3.08	-404.63	-5.44	6.79	-0.38
		1	10	25.00	-3.94	1.26	-469.82	-3.31	7.48	-0.46
		2	10	25.00	-1.72	2.55	-422.92	-5.03	4.49	-0.46
		3	10	25.00	-3.94	3.83	-428.61	-6.75	7.48	-0.46
		1	11	25.00	-3.93	1.26	-474.38	-3.32	7.44	-0.46
		2	11	25.00	-1.71	2.55	-427.49	-5.04	4.46	-0.46
		3	11	25.00	-3.93	3.83	-433.52	-6.76	7.44	-0.46
		1	12	25.00	-2.70	0.71	-333.56	-1.92	5.09	-0.28
		2	12	25.00	-1.35	1.48	-303.85	-2.97	3.28	-0.28
		3	12	25.00	-2.70	2.26	-305.90	-4.01	5.09	-0.28
		1	13	25.00	-3.04	1.03	-361.78	-2.66	5.78	-0.35
		2	13	25.00	-1.33	2.02	-324.98	-3.99	3.47	-0.35
		3	13	25.00	-3.04	3.01	-329.88	-5.32	5.78	-0.35
		1	14	25.00	-3.03	1.03	-366.35	-2.68	5.74	-0.35
		2	14	25.00	-1.32	2.02	-329.55	-4.00	3.44	-0.35
		3	14	25.00	-3.03	3.01	-334.78	-5.33	5.74	-0.35
		1	15	25.00	-14.11	-1.56	-429.44	5.23	32.95	-0.06
		2	15	25.00	-13.83	-1.40	-348.55	5.00	32.57	-0.06
		3	15	25.00	-14.11	-1.23	-165.72	4.78	32.95	-0.06
		1	16	25.00	-16.23	4.68	-470.88	-8.67	38.03	-0.21
		2	16	25.00	-15.22	5.26	-278.94	-9.45	36.69	-0.21
		3	16	25.00	-16.23	5.84	-164.84	-10.22	38.03	-0.21
		1	17	25.00	10.42	-2.90	-224.58	3.99	-27.04	-0.44
		2	17	25.00	12.54	-1.68	-348.99	2.35	-29.88	-0.44
		3	17	25.00	10.42	-0.45	-470.17	0.71	-27.04	-0.44
		1	18	25.00	8.31	3.35	-266.03	-9.91	-21.95	-0.59
		2	18	25.00	11.15	4.98	-279.38	-12.10	-25.76	-0.59
		3	18	25.00	8.31	6.62	-469.29	-14.30	-21.95	-0.59
		1	19	25.00	-15.66	-2.70	-441.60	7.73	36.80	-0.08
		2	19	25.00	-15.25	-2.46	-359.94	7.41	36.26	-0.08
		3	19	25.00	-15.66	-2.23	-144.41	7.10	36.80	-0.08
		1	20	25.00	-14.68	5.82	-458.72	-11.17	34.18	-0.18
		2	20	25.00	-13.80	6.33	-267.56	-11.86	33.00	-0.18
		3	20	25.00	-14.68	6.84	-186.15	-12.54	34.18	-0.18
		1	21	25.00	8.88	-4.04	-236.74	6.49	-23.18	-0.46
		2	21	25.00	11.12	-2.74	-360.38	4.76	-26.19	-0.46
		3	21	25.00	8.88	-1.45	-448.86	3.02	-23.18	-0.46
		1	22	25.00	9.86	4.48	-253.87	-12.41	-25.81	-0.56
		2	22	25.00	12.57	6.05	-268.00	-14.51	-29.45	-0.56
		3	22	25.00	9.86	7.62	-490.60	-16.62	-25.81	-0.56
		1	23	25.00	-18.24	-3.44	-460.22	9.98	43.28	-0.07
		2	23	25.00	-17.88	-3.23	-370.69	9.70	42.80	-0.07

Nodo	Tipo	Palo	Cmb	Quota	Fx	Fy	Fz	Mx	My	Mz
		3	23	25.00	-18.24	-3.02	-106.22	9.43	43.28	-0.07
		1	24	25.00	-20.35	2.80	-501.66	-3.91	48.36	-0.22
		2	24	25.00	-19.27	3.43	-301.09	-4.75	46.91	-0.22
		3	24	25.00	-20.35	4.05	-105.34	-5.58	48.36	-0.22
		1	25	25.00	14.55	-1.02	-193.80	-0.77	-37.37	-0.42
		2	25	25.00	16.59	0.16	-326.85	-2.35	-40.11	-0.42
		3	25	25.00	14.55	1.34	-529.67	-3.94	-37.37	-0.42
		1	26	25.00	12.43	5.22	-235.25	-14.66	-32.28	-0.57
		2	26	25.00	15.20	6.82	-257.24	-16.80	-35.99	-0.57
		3	26	25.00	12.43	8.41	-528.79	-18.94	-32.28	-0.57
		1	27	25.00	-19.78	-4.58	-472.38	12.49	47.13	-0.10
		2	27	25.00	-19.30	-4.30	-382.08	12.11	46.49	-0.10
		3	27	25.00	-19.78	-4.02	-84.91	11.74	47.13	-0.10
		1	28	25.00	-18.80	3.94	-489.50	-6.42	44.51	-0.20
		2	28	25.00	-17.84	4.49	-289.70	-7.16	43.22	-0.20
		3	28	25.00	-18.80	5.05	-126.65	-7.90	44.51	-0.20
		1	29	25.00	13.00	-2.16	-205.96	1.74	-33.51	-0.45
		2	29	25.00	15.17	-0.91	-338.23	0.06	-36.42	-0.45
		3	29	25.00	13.00	0.34	-508.36	-1.62	-33.51	-0.45
		1	30	25.00	13.98	6.36	-223.09	-17.17	-36.14	-0.54
		2	30	25.00	16.62	7.88	-245.85	-19.21	-39.68	-0.54
		3	30	25.00	13.98	9.41	-550.10	-21.26	-36.14	-0.54
		1	31	25.00	-3.06	-9.32	-309.38	21.00	6.02	-0.02
		2	31	25.00	-2.97	-9.27	-429.91	20.93	5.90	-0.02
		3	31	25.00	-3.06	-9.22	-273.29	20.87	6.02	-0.02
		1	32	25.00	-10.10	11.50	-447.54	-25.31	22.97	-0.51
		2	32	25.00	-7.62	12.93	-197.89	-27.24	19.64	-0.51
		3	32	25.00	-10.10	14.37	-270.38	-29.16	22.97	-0.51
		1	33	25.00	4.30	-9.72	-247.93	20.63	-11.97	-0.13
		2	33	25.00	4.94	-9.35	-430.04	20.14	-12.83	-0.13
		3	33	25.00	4.30	-8.98	-364.63	19.64	-11.97	-0.13
		1	34	25.00	-2.74	11.10	-386.08	-25.68	4.97	-0.63
		2	34	25.00	0.29	12.85	-198.03	-28.03	0.90	-0.63
		3	34	25.00	-2.74	14.60	-361.71	-30.38	4.97	-0.63
		1	35	25.00	-4.30	-9.88	-318.62	22.43	9.12	-0.02
		2	35	25.00	-4.19	-9.82	-436.55	22.34	8.97	-0.02
		3	35	25.00	-4.30	-9.75	-255.44	22.26	9.12	-0.02
		1	36	25.00	-11.34	10.94	-456.77	-23.88	26.07	-0.52
		2	36	25.00	-8.83	12.38	-204.54	-25.83	22.70	-0.52
		3	36	25.00	-11.34	13.83	-252.53	-27.77	26.07	-0.52
		1	37	25.00	5.54	-9.16	-238.69	19.20	-15.07	-0.13
		2	37	25.00	6.15	-8.80	-423.40	18.73	-15.90	-0.13
		3	37	25.00	5.54	-8.44	-382.48	18.25	-15.07	-0.13
		1	38	25.00	-1.51	11.66	-376.85	-27.11	1.88	-0.62
		2	38	25.00	1.51	13.40	-191.38	-29.44	-2.17	-0.62
		3	38	25.00	-1.51	15.14	-379.56	-31.78	1.88	-0.62
		1	39	25.00	-8.22	-13.11	-349.92	29.35	18.87	-0.10
		2	39	25.00	-7.72	-12.82	-467.87	28.97	18.21	-0.10
		3	39	25.00	-8.22	-12.53	-202.28	28.58	18.87	-0.10
		1	40	25.00	-4.94	15.29	-407.00	-33.66	10.12	-0.43
		2	40	25.00	-2.87	16.49	-159.93	-35.27	7.33	-0.43
		3	40	25.00	-4.94	17.69	-341.40	-36.88	10.12	-0.43
		1	41	25.00	-0.86	-13.51	-288.47	28.98	0.88	-0.22
		2	41	25.00	0.19	-12.90	-468.00	28.17	-0.53	-0.22
		3	41	25.00	-0.86	-12.30	-293.61	27.36	0.88	-0.22
		1	42	25.00	2.42	14.89	-345.54	-34.03	-7.88	-0.54
		2	42	25.00	5.04	16.40	-160.07	-36.06	-11.40	-0.54
		3	42	25.00	2.42	17.92	-432.73	-38.10	-7.88	-0.54
		1	43	25.00	-9.46	-13.67	-359.16	30.78	21.97	-0.11
		2	43	25.00	-8.94	-13.37	-474.51	30.38	21.28	-0.11
		3	43	25.00	-9.46	-13.07	-184.43	29.97	21.97	-0.11
		1	44	25.00	-6.18	14.73	-416.23	-32.23	13.22	-0.43
		2	44	25.00	-4.08	15.94	-166.58	-33.86	10.40	-0.43
		3	44	25.00	-6.18	17.15	-323.55	-35.48	13.22	-0.43
		1	45	25.00	0.38	-12.94	-279.23	27.55	-2.22	-0.21
		2	45	25.00	1.40	-12.35	-461.35	26.76	-3.60	-0.21
		3	45	25.00	0.38	-11.76	-311.46	25.96	-2.22	-0.21
		1	46	25.00	3.65	15.45	-336.31	-35.46	-10.98	-0.54
		2	46	25.00	6.26	16.95	-153.42	-37.47	-14.47	-0.54
		3	46	25.00	3.65	18.46	-450.58	-39.49	-10.98	-0.54
		1	47	25.00	19.91	1.48	-160.33	-7.46	-50.48	-0.60
		2	47	25.00	22.81	3.15	-294.74	-9.70	-54.37	-0.60
		3	47	25.00	19.91	4.83	-607.62	-11.95	-50.48	-0.60

Nodo	Tipo	Palo	Cmb	Quota	Fx	Fy	Fz	Mx	My	Mz
		1	48	25.00	-25.71	0.30	-535.13	2.78	61.48	-0.05
		2	48	25.00	-25.49	0.43	-333.19	2.61	61.18	-0.05
		3	48	25.00	-25.71	0.56	-27.39	2.43	61.48	-0.05
		1	49	25.00	-4.88	20.42	-429.38	-45.54	9.93	-0.65
		2	49	25.00	-1.72	22.24	-101.83	-47.98	5.70	-0.65
		3	49	25.00	-4.88	24.06	-365.57	-50.42	9.93	-0.65
		1	50	25.00	-0.93	-18.64	-266.08	40.86	1.06	6.35e-03
		2	50	25.00	-0.96	-18.66	-526.10	40.88	1.11	6.35e-03
		3	50	25.00	-0.93	-18.67	-269.43	40.91	1.06	6.35e-03
126	Plinto su 4 pali	1	1	25.00	4.98	1.52	-355.03	-3.10	-10.25	6.30e-04
		2	1	25.00	4.98	1.52	-330.55	-3.10	-10.25	6.30e-04
		3	1	25.00	4.98	1.52	-412.94	-3.10	-10.25	6.30e-04
		4	1	25.00	4.98	1.52	-437.42	-3.10	-10.25	6.30e-04
		1	2	25.00	5.04	1.58	-357.97	-3.23	-10.38	1.14e-03
		2	2	25.00	5.03	1.58	-332.48	-3.23	-10.37	1.14e-03
		3	2	25.00	5.03	1.58	-415.85	-3.22	-10.37	1.14e-03
		4	2	25.00	5.04	1.58	-441.34	-3.22	-10.38	1.14e-03
		1	3	25.00	5.74	0.31	-415.58	-0.71	-11.93	-0.08
		2	3	25.00	6.08	0.31	-408.66	-0.71	-12.40	-0.08
		3	3	25.00	6.08	0.65	-506.36	-1.18	-12.40	-0.08
		4	3	25.00	5.74	0.65	-513.28	-1.18	-11.93	-0.08
		1	4	25.00	5.80	0.37	-418.52	-0.84	-12.06	-0.08
		2	4	25.00	6.14	0.37	-410.59	-0.84	-12.52	-0.08
		3	4	25.00	6.14	0.71	-509.28	-1.30	-12.52	-0.08
		4	4	25.00	5.80	0.71	-517.21	-1.30	-12.06	-0.08
		1	5	25.00	3.67	1.22	-262.90	-2.48	-7.55	7.19e-03
		2	5	25.00	3.64	1.22	-243.53	-2.48	-7.50	7.19e-03
		3	5	25.00	3.64	1.19	-304.01	-2.43	-7.50	7.19e-03
		4	5	25.00	3.67	1.19	-323.39	-2.43	-7.55	7.19e-03
		1	6	25.00	3.73	1.28	-265.85	-2.60	-7.67	7.70e-03
		2	6	25.00	3.70	1.28	-245.46	-2.60	-7.62	7.70e-03
		3	6	25.00	3.70	1.24	-306.93	-2.55	-7.62	7.70e-03
		4	6	25.00	3.73	1.24	-327.31	-2.55	-7.67	7.70e-03
		1	7	25.00	4.43	5.71e-03	-323.45	-0.09	-9.23	-0.07
		2	7	25.00	4.75	5.71e-03	-321.64	-0.09	-9.66	-0.07
		3	7	25.00	4.75	0.32	-397.44	-0.51	-9.66	-0.07
		4	7	25.00	4.43	0.32	-399.25	-0.51	-9.23	-0.07
		1	8	25.00	4.49	0.07	-326.40	-0.21	-9.35	-0.07
		2	8	25.00	4.80	0.07	-323.57	-0.21	-9.78	-0.07
		3	8	25.00	4.80	0.38	-400.35	-0.63	-9.78	-0.07
		4	8	25.00	4.49	0.38	-403.18	-0.63	-9.35	-0.07
		1	9	25.00	5.10	1.64	-360.92	-3.36	-10.50	1.65e-03
		2	9	25.00	5.09	1.64	-334.42	-3.36	-10.49	1.65e-03
		3	9	25.00	5.09	1.64	-418.77	-3.34	-10.49	1.65e-03
		4	9	25.00	5.10	1.64	-445.27	-3.34	-10.50	1.65e-03
		1	10	25.00	5.51	0.67	-397.41	-1.43	-11.43	-0.05
		2	10	25.00	5.75	0.67	-385.23	-1.43	-11.76	-0.05
		3	10	25.00	5.75	0.91	-478.33	-1.76	-11.76	-0.05
		4	10	25.00	5.51	0.91	-490.52	-1.76	-11.43	-0.05
		1	11	25.00	5.63	0.79	-403.30	-1.68	-11.68	-0.05
		2	11	25.00	5.87	0.79	-389.09	-1.68	-11.99	-0.05
		3	11	25.00	5.87	1.03	-484.17	-2.00	-11.99	-0.05
		4	11	25.00	5.63	1.03	-498.38	-2.00	-11.68	-0.05
		1	12	25.00	3.79	1.34	-268.79	-2.73	-7.79	8.21e-03
		2	12	25.00	3.75	1.34	-247.40	-2.73	-7.74	8.21e-03
		3	12	25.00	3.75	1.30	-309.84	-2.68	-7.74	8.21e-03
		4	12	25.00	3.79	1.30	-331.24	-2.68	-7.79	8.21e-03
		1	13	25.00	4.20	0.37	-305.29	-0.80	-8.73	-0.05
		2	13	25.00	4.41	0.37	-298.21	-0.80	-9.01	-0.05
		3	13	25.00	4.41	0.58	-369.41	-1.09	-9.01	-0.05
		4	13	25.00	4.20	0.58	-376.49	-1.09	-8.73	-0.05
		1	14	25.00	4.32	0.49	-311.18	-1.05	-8.97	-0.05
		2	14	25.00	4.53	0.49	-302.08	-1.05	-9.25	-0.05
		3	14	25.00	4.53	0.70	-375.24	-1.33	-9.25	-0.05
		4	14	25.00	4.32	0.70	-384.34	-1.33	-8.97	-0.05
		1	15	25.00	3.65	-0.05	-297.58	-0.11	-6.36	-0.01
		2	15	25.00	3.70	-0.05	-293.44	-0.11	-6.43	-0.01
		3	15	25.00	3.70	3.58e-03	-326.91	-0.18	-6.43	-0.01
		4	15	25.00	3.65	3.58e-03	-331.05	-0.18	-6.36	-0.01
		1	16	25.00	4.04	1.28	-308.58	-3.04	-6.67	0.11
		2	16	25.00	3.53	1.28	-278.01	-3.04	-5.99	0.11
		3	16	25.00	3.53	0.77	-306.42	-2.36	-5.99	0.11
		4	16	25.00	4.04	0.77	-336.99	-2.36	-6.67	0.11

Nodo	Tipo	Palo	Cmb	Quota	Fx	Fy	Fz	Mx	My	Mz
		1	17	25.00	3.91	0.18	-265.66	3.34e-03	-9.77	-0.16
		2	17	25.00	4.63	0.18	-271.53	3.34e-03	-10.74	-0.16
		3	17	25.00	4.63	0.91	-376.34	-0.97	-10.74	-0.16
		4	17	25.00	3.91	0.91	-370.47	-0.97	-9.77	-0.16
		1	18	25.00	4.30	1.52	-276.66	-2.93	-10.08	-0.04
		2	18	25.00	4.46	1.52	-256.11	-2.93	-10.30	-0.04
		3	18	25.00	4.46	1.68	-355.86	-3.14	-10.30	-0.04
		4	18	25.00	4.30	1.68	-376.41	-3.14	-10.08	-0.04
		1	19	25.00	3.66	-0.10	-298.41	-0.10	-6.34	-0.03
		2	19	25.00	3.81	-0.10	-293.04	-0.10	-6.54	-0.03
		3	19	25.00	3.81	0.05	-325.80	-0.30	-6.54	-0.03
		4	19	25.00	3.66	0.05	-331.16	-0.30	-6.34	-0.03
		1	20	25.00	4.03	1.33	-307.75	-3.06	-6.69	0.13
		2	20	25.00	3.43	1.33	-278.41	-3.06	-5.87	0.13
		3	20	25.00	3.43	0.73	-307.53	-2.24	-5.87	0.13
		4	20	25.00	4.03	0.73	-336.88	-2.24	-6.69	0.13
		1	21	25.00	3.92	0.13	-266.49	0.02	-9.75	-0.18
		2	21	25.00	4.74	0.13	-271.14	0.02	-10.86	-0.18
		3	21	25.00	4.74	0.95	-375.23	-1.09	-10.86	-0.18
		4	21	25.00	3.92	0.95	-370.58	-1.09	-9.75	-0.18
		1	22	25.00	4.29	1.56	-275.83	-2.94	-10.10	-0.01
		2	22	25.00	4.35	1.56	-256.50	-2.94	-10.19	-0.01
		3	22	25.00	4.35	1.63	-356.97	-3.03	-10.19	-0.01
		4	22	25.00	4.29	1.63	-376.30	-3.03	-10.10	-0.01
		1	23	25.00	3.75	-0.09	-303.63	-0.28	-6.06	-0.02
		2	23	25.00	3.85	-0.09	-294.32	-0.28	-6.21	-0.02
		3	23	25.00	3.85	0.02	-317.82	-0.42	-6.21	-0.02
		4	23	25.00	3.75	0.02	-327.13	-0.42	-6.06	-0.02
		1	24	25.00	4.14	1.24	-314.63	-3.21	-6.38	0.10
		2	24	25.00	3.69	1.24	-278.90	-3.21	-5.77	0.10
		3	24	25.00	3.69	0.79	-297.34	-2.60	-5.77	0.10
		4	24	25.00	4.14	0.79	-333.07	-2.60	-6.38	0.10
		1	25	25.00	3.81	0.23	-259.62	0.17	-10.07	-0.15
		2	25	25.00	4.48	0.23	-270.65	0.17	-10.96	-0.15
		3	25	25.00	4.48	0.89	-385.43	-0.73	-10.96	-0.15
		4	25	25.00	3.81	0.89	-374.39	-0.73	-10.07	-0.15
		1	26	25.00	4.20	1.56	-270.61	-2.76	-10.38	-0.02
		2	26	25.00	4.31	1.56	-255.22	-2.76	-10.52	-0.02
		3	26	25.00	4.31	1.66	-364.94	-2.90	-10.52	-0.02
		4	26	25.00	4.20	1.66	-380.33	-2.90	-10.38	-0.02
		1	27	25.00	3.76	-0.14	-304.46	-0.26	-6.04	-0.05
		2	27	25.00	3.96	-0.14	-293.93	-0.26	-6.32	-0.05
		3	27	25.00	3.96	0.07	-316.71	-0.54	-6.32	-0.05
		4	27	25.00	3.76	0.07	-327.24	-0.54	-6.04	-0.05
		1	28	25.00	4.13	1.29	-313.80	-3.22	-6.39	0.12
		2	28	25.00	3.58	1.29	-279.29	-3.22	-5.65	0.12
		3	28	25.00	3.58	0.74	-298.45	-2.48	-5.65	0.12
		4	28	25.00	4.13	0.74	-332.96	-2.48	-6.39	0.12
		1	29	25.00	3.82	0.18	-260.44	0.18	-10.05	-0.17
		2	29	25.00	4.58	0.18	-270.26	0.18	-11.08	-0.17
		3	29	25.00	4.58	0.94	-384.32	-0.85	-11.08	-0.17
		4	29	25.00	3.82	0.94	-374.50	-0.85	-10.05	-0.17
		1	30	25.00	4.19	1.61	-269.79	-2.78	-10.40	-1.59e-03
		2	30	25.00	4.20	1.61	-255.62	-2.78	-10.41	-1.59e-03
		3	30	25.00	4.20	1.61	-366.05	-2.78	-10.41	-1.59e-03
		4	30	25.00	4.19	1.61	-380.22	-2.78	-10.40	-1.59e-03
		1	31	25.00	3.28	-1.52	-273.58	3.35	-7.19	-0.21
		2	31	25.00	4.22	-1.52	-303.77	3.35	-8.45	-0.21
		3	31	25.00	4.22	-0.58	-368.11	2.08	-8.45	-0.21
		4	31	25.00	3.28	-0.58	-337.92	2.08	-7.19	-0.21
		1	32	25.00	4.59	2.92	-310.24	-6.42	-8.23	0.20
		2	32	25.00	3.66	2.92	-252.35	-6.42	-6.98	0.20
		3	32	25.00	3.66	1.99	-299.82	-5.17	-6.98	0.20
		4	32	25.00	4.59	1.99	-357.71	-5.17	-8.23	0.20
		1	33	25.00	3.36	-1.45	-264.00	3.38	-8.21	-0.25
		2	33	25.00	4.50	-1.45	-297.20	3.38	-9.75	-0.25
		3	33	25.00	4.50	-0.31	-382.94	1.84	-9.75	-0.25
		4	33	25.00	3.36	-0.31	-349.75	1.84	-8.21	-0.25
		1	34	25.00	4.67	2.99	-300.66	-6.38	-9.26	0.16
		2	34	25.00	3.94	2.99	-245.78	-6.38	-8.27	0.16
		3	34	25.00	3.94	2.26	-314.65	-5.40	-8.27	0.16
		4	34	25.00	4.67	2.26	-369.54	-5.40	-9.26	0.16
		1	35	25.00	3.31	-1.53	-275.39	3.30	-7.10	-0.21

Nodo	Tipo	Palo	Cmb	Quota	Fx	Fy	Fz	Mx	My	Mz
		2	35	25.00	4.27	-1.53	-304.03	3.30	-8.39	-0.21
		3	35	25.00	4.27	-0.57	-365.38	2.00	-8.39	-0.21
		4	35	25.00	3.31	-0.57	-336.75	2.00	-7.10	-0.21
		1	36	25.00	4.62	2.90	-312.05	-6.47	-8.14	0.20
		2	36	25.00	3.71	2.90	-252.61	-6.47	-6.91	0.20
		3	36	25.00	3.71	1.99	-297.10	-5.24	-6.91	0.20
		4	36	25.00	4.62	1.99	-356.54	-5.24	-8.14	0.20
		1	37	25.00	3.33	-1.44	-262.19	3.43	-8.30	-0.25
		2	37	25.00	4.45	-1.44	-296.93	3.43	-9.81	-0.25
		3	37	25.00	4.45	-0.31	-385.67	1.91	-9.81	-0.25
		4	37	25.00	3.33	-0.31	-350.92	1.91	-8.30	-0.25
		1	38	25.00	4.64	3.00	-298.85	-6.34	-9.35	0.16
		2	38	25.00	3.90	3.00	-245.51	-6.34	-8.34	0.16
		3	38	25.00	3.90	2.25	-317.38	-5.33	-8.34	0.16
		4	38	25.00	4.64	2.25	-370.72	-5.33	-9.35	0.16
		1	39	25.00	3.31	-1.68	-276.34	3.39	-7.13	-0.28
		2	39	25.00	4.58	-1.68	-302.46	3.39	-8.84	-0.28
		3	39	25.00	4.58	-0.42	-364.41	1.68	-8.84	-0.28
		4	39	25.00	3.31	-0.42	-338.29	1.68	-7.13	-0.28
		1	40	25.00	4.56	3.08	-307.48	-6.47	-8.29	0.28
		2	40	25.00	3.31	3.08	-253.66	-6.47	-6.60	0.28
		3	40	25.00	3.31	1.83	-303.52	-4.78	-6.60	0.28
		4	40	25.00	4.56	1.83	-357.34	-4.78	-8.29	0.28
		1	41	25.00	3.39	-1.61	-266.76	3.43	-8.15	-0.32
		2	41	25.00	4.86	-1.61	-295.88	3.43	-10.13	-0.32
		3	41	25.00	4.86	-0.15	-379.24	1.45	-10.13	-0.32
		4	41	25.00	3.39	-0.15	-350.12	1.45	-8.15	-0.32
		1	42	25.00	4.64	3.15	-297.91	-6.43	-9.31	0.23
		2	42	25.00	3.58	3.15	-247.09	-6.43	-7.89	0.23
		3	42	25.00	3.58	2.10	-318.35	-5.01	-7.89	0.23
		4	42	25.00	4.64	2.10	-369.17	-5.01	-9.31	0.23
		1	43	25.00	3.34	-1.70	-278.15	3.34	-7.04	-0.28
		2	43	25.00	4.62	-1.70	-302.72	3.34	-8.77	-0.28
		3	43	25.00	4.62	-0.41	-361.68	1.61	-8.77	-0.28
		4	43	25.00	3.34	-0.41	-337.12	1.61	-7.04	-0.28
		1	44	25.00	4.59	3.07	-309.30	-6.52	-8.20	0.27
		2	44	25.00	3.35	3.07	-253.93	-6.52	-6.53	0.27
		3	44	25.00	3.35	1.83	-300.80	-4.85	-6.53	0.27
		4	44	25.00	4.59	1.83	-356.17	-4.85	-8.20	0.27
		1	45	25.00	3.36	-1.60	-264.95	3.48	-8.24	-0.32
		2	45	25.00	4.81	-1.60	-295.62	3.48	-10.20	-0.32
		3	45	25.00	4.81	-0.15	-381.97	1.52	-10.20	-0.32
		4	45	25.00	3.36	-0.15	-351.30	1.52	-8.24	-0.32
		1	46	25.00	4.61	3.16	-296.09	-6.38	-9.40	0.24
		2	46	25.00	3.54	3.16	-246.83	-6.38	-7.96	0.24
		3	46	25.00	3.54	2.09	-321.08	-4.94	-7.96	0.24
		4	46	25.00	4.61	2.09	-370.35	-4.94	-9.40	0.24
		1	47	25.00	4.10	0.98	-256.96	-1.32	-11.15	-0.12
		2	47	25.00	4.64	0.98	-256.99	-1.32	-11.88	-0.12
		3	47	25.00	4.64	1.52	-387.92	-2.05	-11.88	-0.12
		4	47	25.00	4.10	1.52	-387.89	-2.05	-11.15	-0.12
		1	48	25.00	3.85	0.49	-317.28	-1.72	-5.29	0.07
		2	48	25.00	3.52	0.49	-292.55	-1.72	-4.85	0.07
		3	48	25.00	3.52	0.16	-294.84	-1.28	-4.85	0.07
		4	48	25.00	3.85	0.16	-319.57	-1.28	-5.29	0.07
		1	49	25.00	4.99	4.42	-311.89	-9.37	-9.30	0.36
		2	49	25.00	3.37	4.42	-232.48	-9.37	-7.11	0.36
		3	49	25.00	3.37	2.79	-292.17	-7.17	-7.11	0.36
		4	49	25.00	4.99	2.79	-371.59	-7.17	-9.30	0.36
		1	50	25.00	2.95	-2.95	-262.35	6.33	-7.14	-0.41
		2	50	25.00	4.79	-2.95	-317.07	6.33	-9.62	-0.41
		3	50	25.00	4.79	-1.11	-390.59	3.85	-9.62	-0.41
		4	50	25.00	2.95	-1.11	-335.87	3.85	-7.14	-0.41
127	Plinto su 4 pali	1	1	25.00	3.72	0.40	-357.80	-1.58	-8.61	-0.44
		2	1	25.00	5.71	0.40	-333.36	-1.58	-11.30	-0.44
		3	1	25.00	5.71	2.39	-417.06	-4.27	-11.30	-0.44
		4	1	25.00	3.72	2.39	-441.50	-4.27	-8.61	-0.44
		1	2	25.00	3.77	0.45	-360.86	-1.71	-8.73	-0.44
		2	2	25.00	5.78	0.45	-335.36	-1.71	-11.43	-0.44
		3	2	25.00	5.78	2.46	-420.08	-4.41	-11.43	-0.44
		4	2	25.00	3.77	2.46	-445.58	-4.41	-8.73	-0.44
		1	3	25.00	4.23	-1.05	-420.17	1.16	-9.95	-0.59
		2	3	25.00	6.90	-1.05	-414.05	1.16	-13.55	-0.59

Nodo	Tipo	Palo	Cmb	Quota	Fx	Fy	Fz	Mx	My	Mz
		3	3	25.00	6.90	1.62	-512.76	-2.45	-13.55	-0.59
		4	3	25.00	4.23	1.62	-518.89	-2.45	-9.95	-0.59
		1	4	25.00	4.29	-0.99	-423.23	1.03	-10.06	-0.59
		2	4	25.00	6.97	-0.99	-416.05	1.03	-13.68	-0.59
		3	4	25.00	6.97	1.69	-515.79	-2.58	-13.68	-0.59
		4	4	25.00	4.29	1.69	-522.97	-2.58	-10.06	-0.59
		1	5	25.00	2.74	0.38	-264.92	-1.35	-6.33	-0.32
		2	5	25.00	4.19	0.38	-245.48	-1.35	-8.30	-0.32
		3	5	25.00	4.19	1.84	-307.02	-3.32	-8.30	-0.32
		4	5	25.00	2.74	1.84	-326.46	-3.32	-6.33	-0.32
		1	6	25.00	2.79	0.44	-267.98	-1.48	-6.45	-0.32
		2	6	25.00	4.25	0.44	-247.49	-1.48	-8.43	-0.32
		3	6	25.00	4.25	1.91	-310.05	-3.45	-8.43	-0.32
		4	6	25.00	2.79	1.91	-330.54	-3.45	-6.45	-0.32
		1	7	25.00	3.25	-1.06	-327.29	1.39	-7.67	-0.47
		2	7	25.00	5.38	-1.06	-326.18	1.39	-10.55	-0.47
		3	7	25.00	5.38	1.07	-402.73	-1.49	-10.55	-0.47
		4	7	25.00	3.25	1.07	-403.84	-1.49	-7.67	-0.47
		1	8	25.00	3.31	-1.00	-330.35	1.26	-7.79	-0.47
		2	8	25.00	5.45	-1.00	-328.18	1.26	-10.68	-0.47
		3	8	25.00	5.45	1.14	-405.76	-1.63	-10.68	-0.47
		4	8	25.00	3.31	1.14	-407.93	-1.63	-7.79	-0.47
		1	9	25.00	3.83	0.51	-363.92	-1.83	-8.85	-0.44
		2	9	25.00	5.84	0.51	-337.36	-1.83	-11.56	-0.44
		3	9	25.00	5.84	2.52	-423.11	-4.54	-11.56	-0.44
		4	9	25.00	3.83	2.52	-449.67	-4.54	-8.85	-0.44
		1	10	25.00	4.08	-0.62	-401.46	0.33	-9.54	-0.54
		2	10	25.00	6.55	-0.62	-389.84	0.33	-12.87	-0.54
		3	10	25.00	6.55	1.85	-484.05	-3.00	-12.87	-0.54
		4	10	25.00	4.08	1.85	-495.67	-3.00	-9.54	-0.54
		1	11	25.00	4.19	-0.50	-407.58	0.09	-9.78	-0.55
		2	11	25.00	6.67	-0.50	-393.85	0.09	-13.13	-0.55
		3	11	25.00	6.67	1.98	-490.11	-3.26	-13.13	-0.55
		4	11	25.00	4.19	1.98	-503.84	-3.26	-9.78	-0.55
		1	12	25.00	2.85	0.50	-271.03	-1.60	-6.57	-0.32
		2	12	25.00	4.32	0.50	-249.49	-1.60	-8.55	-0.32
		3	12	25.00	4.32	1.97	-313.08	-3.58	-8.55	-0.32
		4	12	25.00	2.85	1.97	-334.62	-3.58	-6.57	-0.32
		1	13	25.00	3.10	-0.63	-308.58	0.56	-7.27	-0.43
		2	13	25.00	5.03	-0.63	-301.97	0.56	-9.87	-0.43
		3	13	25.00	5.03	1.30	-374.02	-2.04	-9.87	-0.43
		4	13	25.00	3.10	1.30	-380.63	-2.04	-7.27	-0.43
		1	14	25.00	3.21	-0.51	-314.69	0.32	-7.51	-0.43
		2	14	25.00	5.15	-0.51	-305.97	0.32	-10.13	-0.43
		3	14	25.00	5.15	1.43	-380.07	-2.31	-10.13	-0.43
		4	14	25.00	3.21	1.43	-388.79	-2.31	-7.51	-0.43
		1	15	25.00	2.70	-0.51	-304.96	0.56	-5.29	-0.31
		2	15	25.00	4.10	-0.51	-301.90	0.56	-7.17	-0.31
		3	15	25.00	4.10	0.88	-340.09	-1.32	-7.17	-0.31
		4	15	25.00	2.70	0.88	-343.16	-1.32	-5.29	-0.31
		1	16	25.00	3.16	0.99	-314.06	-2.39	-5.70	-0.14
		2	16	25.00	3.81	0.99	-289.48	-2.39	-6.57	-0.14
		3	16	25.00	3.81	1.63	-322.85	-3.26	-6.57	-0.14
		4	16	25.00	3.16	1.63	-347.44	-3.26	-5.70	-0.14
		1	17	25.00	2.72	-1.38	-265.68	1.87	-8.04	-0.62
		2	17	25.00	5.53	-1.38	-266.05	1.87	-11.83	-0.62
		3	17	25.00	5.53	1.43	-367.76	-1.92	-11.83	-0.62
		4	17	25.00	2.72	1.43	-367.39	-1.92	-8.04	-0.62
		1	18	25.00	3.18	0.13	-274.78	-1.08	-8.45	-0.45
		2	18	25.00	5.24	0.13	-253.63	-1.08	-11.23	-0.45
		3	18	25.00	5.24	2.19	-350.51	-3.86	-11.23	-0.45
		4	18	25.00	3.18	2.19	-371.66	-3.86	-8.45	-0.45
		1	19	25.00	2.71	-0.64	-304.66	0.80	-5.27	-0.33
		2	19	25.00	4.21	-0.64	-303.11	0.80	-7.30	-0.33
		3	19	25.00	4.21	0.86	-340.90	-1.23	-7.30	-0.33
		4	19	25.00	2.71	0.86	-342.45	-1.23	-5.27	-0.33
		1	20	25.00	3.16	1.12	-314.37	-2.63	-5.71	-0.12
		2	20	25.00	3.69	1.12	-288.26	-2.63	-6.43	-0.12
		3	20	25.00	3.69	1.65	-322.04	-3.34	-6.43	-0.12
		4	20	25.00	3.16	1.65	-348.15	-3.34	-5.71	-0.12
		1	21	25.00	2.72	-1.51	-265.37	2.11	-8.02	-0.64
		2	21	25.00	5.65	-1.51	-267.26	2.11	-11.96	-0.64
		3	21	25.00	5.65	1.42	-368.57	-1.83	-11.96	-0.64

Nodo	Tipo	Palo	Cmb	Quota	Fx	Fy	Fz	Mx	My	Mz
		4	21	25.00	2.72	1.42	-366.67	-1.83	-8.02	-0.64
		1	22	25.00	3.18	0.25	-275.08	-1.32	-8.46	-0.43
		2	22	25.00	5.12	0.25	-252.41	-1.32	-11.09	-0.43
		3	22	25.00	5.12	2.20	-349.71	-3.95	-11.09	-0.43
		4	22	25.00	3.18	2.20	-372.38	-3.95	-8.46	-0.43
		1	23	25.00	2.78	-0.85	-307.49	1.25	-5.02	-0.31
		2	23	25.00	4.19	-0.85	-309.75	1.25	-6.93	-0.31
		3	23	25.00	4.19	0.56	-339.47	-0.66	-6.93	-0.31
		4	23	25.00	2.78	0.56	-337.21	-0.66	-5.02	-0.31
		1	24	25.00	3.24	0.65	-316.59	-1.70	-5.43	-0.15
		2	24	25.00	3.90	0.65	-297.34	-1.70	-6.33	-0.15
		3	24	25.00	3.90	1.31	-322.22	-2.60	-6.33	-0.15
		4	24	25.00	3.24	1.31	-341.48	-2.60	-5.43	-0.15
		1	25	25.00	2.65	-1.04	-263.15	1.19	-8.30	-0.62
		2	25	25.00	5.44	-1.04	-258.19	1.19	-12.07	-0.62
		3	25	25.00	5.44	1.75	-368.39	-2.58	-12.07	-0.62
		4	25	25.00	2.65	1.75	-373.34	-2.58	-8.30	-0.62
		1	26	25.00	3.11	0.47	-272.25	-1.76	-8.71	-0.45
		2	26	25.00	5.15	0.47	-245.77	-1.76	-11.47	-0.45
		3	26	25.00	5.15	2.51	-351.14	-4.52	-11.47	-0.45
		4	26	25.00	3.11	2.51	-377.61	-4.52	-8.71	-0.45
		1	27	25.00	2.78	-0.98	-307.19	1.49	-5.01	-0.34
		2	27	25.00	4.30	-0.98	-310.97	1.49	-7.06	-0.34
		3	27	25.00	4.30	0.54	-340.28	-0.57	-7.06	-0.34
		4	27	25.00	2.78	0.54	-336.49	-0.57	-5.01	-0.34
		1	28	25.00	3.23	0.78	-316.90	-1.94	-5.45	-0.12
		2	28	25.00	3.78	0.78	-296.12	-1.94	-6.19	-0.12
		3	28	25.00	3.78	1.33	-321.42	-2.69	-6.19	-0.12
		4	28	25.00	3.23	1.33	-342.20	-2.69	-5.45	-0.12
		1	29	25.00	2.65	-1.17	-262.84	1.43	-8.29	-0.64
		2	29	25.00	5.55	-1.17	-259.41	1.43	-12.20	-0.64
		3	29	25.00	5.55	1.74	-369.19	-2.49	-12.20	-0.64
		4	29	25.00	2.65	1.74	-372.63	-2.49	-8.29	-0.64
		1	30	25.00	3.10	0.59	-272.55	-2.00	-8.73	-0.43
		2	30	25.00	5.03	0.59	-244.55	-2.00	-11.33	-0.43
		3	30	25.00	5.03	2.52	-350.33	-4.60	-11.33	-0.43
		4	30	25.00	3.10	2.52	-378.33	-4.60	-8.73	-0.43
		1	31	25.00	2.17	-2.57	-280.60	4.46	-5.77	-0.61
		2	31	25.00	4.94	-2.57	-303.84	4.46	-9.50	-0.61
		3	31	25.00	4.94	0.20	-369.90	0.73	-9.50	-0.61
		4	31	25.00	2.17	0.20	-346.66	0.73	-5.77	-0.61
		1	32	25.00	3.70	2.44	-310.93	-5.37	-7.14	-0.06
		2	32	25.00	3.97	2.44	-262.44	-5.37	-7.50	-0.06
		3	32	25.00	3.97	2.70	-312.41	-5.73	-7.50	-0.06
		4	32	25.00	3.70	2.70	-360.90	-5.73	-7.14	-0.06
		1	33	25.00	2.18	-2.83	-268.81	4.86	-6.59	-0.70
		2	33	25.00	5.37	-2.83	-293.08	4.86	-10.90	-0.70
		3	33	25.00	5.37	0.36	-378.20	0.55	-10.90	-0.70
		4	33	25.00	2.18	0.36	-353.93	0.55	-6.59	-0.70
		1	34	25.00	3.71	2.18	-299.14	-4.98	-7.97	-0.15
		2	34	25.00	4.40	2.18	-251.69	-4.98	-8.90	-0.15
		3	34	25.00	4.40	2.87	-320.71	-5.91	-8.90	-0.15
		4	34	25.00	3.71	2.87	-368.17	-5.91	-7.97	-0.15
		1	35	25.00	2.20	-2.67	-281.36	4.67	-5.69	-0.61
		2	35	25.00	4.97	-2.67	-306.19	4.67	-9.43	-0.61
		3	35	25.00	4.97	0.10	-369.71	0.93	-9.43	-0.61
		4	35	25.00	2.20	0.10	-344.87	0.93	-5.69	-0.61
		1	36	25.00	3.73	2.34	-311.69	-5.17	-7.06	-0.06
		2	36	25.00	4.00	2.34	-264.80	-5.17	-7.43	-0.06
		3	36	25.00	4.00	2.61	-312.22	-5.53	-7.43	-0.06
		4	36	25.00	3.73	2.61	-359.11	-5.53	-7.06	-0.06
		1	37	25.00	2.16	-2.73	-268.05	4.65	-6.67	-0.70
		2	37	25.00	5.34	-2.73	-290.72	4.65	-10.97	-0.70
		3	37	25.00	5.34	0.46	-378.38	0.36	-10.97	-0.70
		4	37	25.00	2.16	0.46	-355.71	0.36	-6.67	-0.70
		1	38	25.00	3.69	2.28	-298.38	-5.18	-8.05	-0.15
		2	38	25.00	4.37	2.28	-249.33	-5.18	-8.97	-0.15
		3	38	25.00	4.37	2.97	-320.90	-6.11	-8.97	-0.15
		4	38	25.00	3.69	2.97	-369.95	-6.11	-8.05	-0.15
		1	39	25.00	2.18	-3.00	-279.58	5.26	-5.72	-0.69
		2	39	25.00	5.32	-3.00	-307.90	5.26	-9.96	-0.69
		3	39	25.00	5.32	0.14	-372.59	1.03	-9.96	-0.69
		4	39	25.00	2.18	0.14	-344.27	1.03	-5.72	-0.69

Nodo	Tipo	Palo	Cmb	Quota	Fx	Fy	Fz	Mx	My	Mz
		1	40	25.00	3.70	2.87	-311.94	-6.17	-7.19	0.02
		2	40	25.00	3.59	2.87	-258.38	-6.17	-7.04	0.02
		3	40	25.00	3.59	2.76	-309.72	-6.02	-7.04	0.02
		4	40	25.00	3.70	2.76	-363.29	-6.02	-7.19	0.02
		1	41	25.00	2.19	-3.26	-267.80	5.66	-6.55	-0.79
		2	41	25.00	5.75	-3.26	-297.14	5.66	-11.35	-0.79
		3	41	25.00	5.75	0.30	-380.88	0.85	-11.35	-0.79
		4	41	25.00	2.19	0.30	-351.54	0.85	-6.55	-0.79
		1	42	25.00	3.70	2.61	-300.16	-5.78	-8.01	-0.07
		2	42	25.00	4.02	2.61	-247.63	-5.78	-8.44	-0.07
		3	42	25.00	4.02	2.93	-318.02	-6.20	-8.44	-0.07
		4	42	25.00	3.70	2.93	-370.55	-6.20	-8.01	-0.07
		1	43	25.00	2.20	-3.10	-280.34	5.47	-5.64	-0.69
		2	43	25.00	5.35	-3.10	-310.25	5.47	-9.88	-0.69
		3	43	25.00	5.35	0.04	-372.40	1.23	-9.88	-0.69
		4	43	25.00	2.20	0.04	-342.49	1.23	-5.64	-0.69
		1	44	25.00	3.72	2.77	-312.70	-5.97	-7.11	0.02
		2	44	25.00	3.61	2.77	-260.74	-5.97	-6.97	0.02
		3	44	25.00	3.61	2.67	-309.54	-5.83	-6.97	0.02
		4	44	25.00	3.72	2.67	-361.50	-5.83	-7.11	0.02
		1	45	25.00	2.17	-3.16	-267.04	5.45	-6.63	-0.78
		2	45	25.00	5.72	-3.16	-294.78	5.45	-11.43	-0.78
		3	45	25.00	5.72	0.40	-381.07	0.65	-11.43	-0.78
		4	45	25.00	2.17	0.40	-353.33	0.65	-6.63	-0.78
		1	46	25.00	3.68	2.71	-299.40	-5.98	-8.09	-0.07
		2	46	25.00	3.99	2.71	-245.27	-5.98	-8.51	-0.07
		3	46	25.00	3.99	3.02	-318.21	-6.40	-8.51	-0.07
		4	46	25.00	3.68	3.02	-372.34	-6.40	-8.09	-0.07
		1	47	25.00	2.89	-0.93	-254.04	0.90	-9.24	-0.61
		2	47	25.00	5.68	-0.93	-245.91	0.90	-13.00	-0.61
		3	47	25.00	5.68	1.86	-370.30	-2.86	-13.00	-0.61
		4	47	25.00	2.89	1.86	-378.43	-2.86	-9.24	-0.61
		1	48	25.00	2.99	0.54	-325.70	-1.41	-4.49	-0.15
		2	48	25.00	3.66	0.54	-309.62	-1.41	-5.39	-0.15
		3	48	25.00	3.66	1.21	-320.31	-2.32	-5.39	-0.15
		4	48	25.00	2.99	1.21	-336.39	-2.32	-4.49	-0.15
		1	49	25.00	4.15	4.12	-313.26	-8.70	-8.13	0.12
		2	49	25.00	3.61	4.12	-240.15	-8.70	-7.40	0.12
		3	49	25.00	3.61	3.58	-299.07	-7.96	-7.40	0.12
		4	49	25.00	4.15	3.58	-372.19	-7.96	-8.13	0.12
		1	50	25.00	1.73	-4.51	-266.48	8.19	-5.60	-0.88
		2	50	25.00	5.73	-4.51	-315.38	8.19	-11.00	-0.88
		3	50	25.00	5.73	-0.51	-391.54	2.79	-11.00	-0.88
		4	50	25.00	1.73	-0.51	-342.64	2.79	-5.60	-0.88
128	plinto su due pali y(rot. 90.00)	1	1	25.00	-23.22	-3.36	-479.27	6.92	47.60	0.24
		2	1	25.00	-21.89	-3.36	-433.83	6.92	45.82	0.24
		1	2	25.00	-23.35	-3.33	-481.54	6.87	47.86	0.24
		2	2	25.00	-22.02	-3.33	-436.49	6.87	46.07	0.24
		1	3	25.00	-27.15	-5.10	-558.72	10.55	55.52	0.34
		2	3	25.00	-25.26	-5.10	-488.82	10.55	52.99	0.34
		1	4	25.00	-27.27	-5.07	-560.99	10.50	55.77	0.34
		2	4	25.00	-25.39	-5.07	-491.49	10.50	53.24	0.34
		1	5	25.00	-17.28	-2.44	-357.21	5.02	35.43	0.17
		2	5	25.00	-16.32	-2.44	-324.26	5.02	34.14	0.17
		1	6	25.00	-17.41	-2.41	-359.47	4.97	35.69	0.17
		2	6	25.00	-16.44	-2.41	-326.92	4.97	34.39	0.17
		1	7	25.00	-21.21	-4.18	-436.66	8.65	43.35	0.27
		2	7	25.00	-19.69	-4.18	-379.26	8.65	41.31	0.27
		1	8	25.00	-21.33	-4.15	-438.92	8.60	43.60	0.27
		2	8	25.00	-19.81	-4.15	-381.92	8.60	41.56	0.27
		1	9	25.00	-23.47	-3.31	-483.80	6.81	48.11	0.24
		2	9	25.00	-22.14	-3.31	-439.15	6.81	46.33	0.24
		1	10	25.00	-25.97	-4.58	-534.89	9.46	53.14	0.31
		2	10	25.00	-24.25	-4.58	-472.32	9.46	50.84	0.31
		1	11	25.00	-26.22	-4.53	-539.42	9.35	53.65	0.31
		2	11	25.00	-24.50	-4.53	-477.65	9.35	51.35	0.31
		1	12	25.00	-17.53	-2.39	-361.74	4.91	35.94	0.17
		2	12	25.00	-16.56	-2.39	-329.59	4.91	34.65	0.17
		1	13	25.00	-20.03	-3.66	-412.82	7.56	40.97	0.24
		2	13	25.00	-18.67	-3.66	-362.76	7.56	39.16	0.24
		1	14	25.00	-20.28	-3.61	-417.36	7.46	41.48	0.24
		2	14	25.00	-18.92	-3.61	-368.09	7.46	39.67	0.24
		1	15	25.00	-28.36	-3.76	-393.17	8.70	58.40	0.62

Nodo	Tipo	Palo	Cmb	Quota	Fx	Fy	Fz	Mx	My	Mz
		2	15	25.00	-24.86	-3.76	-324.39	8.70	53.71	0.62
		1	16	25.00	-26.25	-2.84	-375.59	6.61	54.71	0.42
		2	16	25.00	-23.87	-2.84	-322.76	6.61	51.52	0.42
		1	17	25.00	-11.45	-3.43	-402.38	6.33	22.48	-2.99e-04
		2	17	25.00	-11.45	-3.43	-369.76	6.33	22.49	-2.99e-04
		1	18	25.00	-9.35	-2.51	-384.80	4.25	18.80	-0.20
		2	18	25.00	-10.47	-2.51	-368.13	4.25	20.30	-0.20
		1	19	25.00	-28.16	-3.93	-396.40	9.10	58.05	0.62
		2	19	25.00	-24.70	-3.93	-324.40	9.10	53.42	0.62
		1	20	25.00	-26.45	-2.67	-372.36	6.21	55.05	0.43
		2	20	25.00	-24.03	-2.67	-322.74	6.21	51.81	0.43
		1	21	25.00	-11.25	-3.60	-405.61	6.74	22.14	-7.36e-03
		2	21	25.00	-11.29	-3.60	-369.77	6.74	22.20	-7.36e-03
		1	22	25.00	-9.55	-2.34	-381.57	3.85	19.14	-0.19
		2	22	25.00	-10.63	-2.34	-368.12	3.85	20.59	-0.19
		1	23	25.00	-30.62	-4.03	-398.89	9.67	63.37	0.68
		2	23	25.00	-26.80	-4.03	-318.71	9.67	58.25	0.68
		1	24	25.00	-28.51	-3.11	-381.31	7.59	59.69	0.48
		2	24	25.00	-25.81	-3.11	-317.08	7.59	56.07	0.48
		1	25	25.00	-9.19	-3.16	-396.67	5.36	17.51	-0.06
		2	25	25.00	-9.51	-3.16	-375.44	5.36	17.94	-0.06
		1	26	25.00	-7.09	-2.23	-379.09	3.28	13.83	-0.26
		2	26	25.00	-8.53	-2.23	-373.80	3.28	15.76	-0.26
		1	27	25.00	-30.42	-4.21	-402.12	10.07	63.03	0.67
		2	27	25.00	-26.64	-4.21	-318.72	10.07	57.96	0.67
		1	28	25.00	-28.71	-2.94	-378.08	7.19	60.03	0.49
		2	28	25.00	-25.97	-2.94	-317.07	7.19	56.36	0.49
		1	29	25.00	-8.99	-3.33	-399.90	5.76	17.17	-0.06
		2	29	25.00	-9.35	-3.33	-375.45	5.76	17.65	-0.06
		1	30	25.00	-7.29	-2.06	-375.86	2.88	14.17	-0.25
		2	30	25.00	-8.69	-2.06	-373.79	2.88	16.05	-0.25
		1	31	25.00	-24.90	-4.72	-416.90	10.31	50.13	0.64
		2	31	25.00	-21.32	-4.72	-342.18	10.31	45.33	0.64
		1	32	25.00	-17.88	-1.64	-358.30	3.35	37.84	-0.03
		2	32	25.00	-18.03	-1.64	-336.73	3.35	38.05	-0.03
		1	33	25.00	-19.83	-4.62	-419.67	9.60	39.35	0.45
		2	33	25.00	-17.30	-4.62	-355.79	9.60	35.96	0.45
		1	34	25.00	-12.81	-1.55	-361.07	2.64	27.07	-0.22
		2	34	25.00	-14.01	-1.55	-350.34	2.64	28.69	-0.22
		1	35	25.00	-25.58	-4.80	-418.62	10.60	51.62	0.66
		2	35	25.00	-21.90	-4.80	-340.47	10.60	46.69	0.66
		1	36	25.00	-18.55	-1.73	-360.02	3.64	39.34	-0.01
		2	36	25.00	-18.61	-1.73	-335.03	3.64	39.41	-0.01
		1	37	25.00	-19.15	-4.54	-417.95	9.31	37.86	0.43
		2	37	25.00	-16.72	-4.54	-357.49	9.31	34.60	0.43
		1	38	25.00	-12.13	-1.46	-359.35	2.35	25.58	-0.23
		2	38	25.00	-13.43	-1.46	-352.05	2.35	27.32	-0.23
		1	39	25.00	-24.23	-5.29	-427.67	11.64	48.98	0.62
		2	39	25.00	-20.78	-5.29	-342.21	11.64	44.36	0.62
		1	40	25.00	-18.54	-1.07	-347.54	2.02	38.99	-4.02e-03
		2	40	25.00	-18.56	-1.07	-336.69	2.02	39.02	-4.02e-03
		1	41	25.00	-19.16	-5.19	-430.43	10.93	38.21	0.43
		2	41	25.00	-16.76	-5.19	-355.83	10.93	34.99	0.43
		1	42	25.00	-13.47	-0.97	-350.30	1.31	28.21	-0.19
		2	42	25.00	-14.54	-0.97	-350.30	1.31	29.65	-0.19
		1	43	25.00	-24.91	-5.38	-429.38	11.93	50.47	0.63
		2	43	25.00	-21.37	-5.38	-340.51	11.93	45.72	0.63
		1	44	25.00	-19.22	-1.16	-349.25	2.31	40.48	0.01
		2	44	25.00	-19.15	-1.16	-334.99	2.31	40.38	0.01
		1	45	25.00	-18.48	-5.11	-428.72	10.64	36.72	0.41
		2	45	25.00	-16.18	-5.11	-357.53	10.64	33.63	0.41
		1	46	25.00	-12.79	-0.89	-348.59	1.02	26.72	-0.21
		2	46	25.00	-13.96	-0.89	-352.01	1.02	28.29	-0.21
		1	47	25.00	-3.72	-2.62	-390.56	3.73	6.30	-0.32
		2	47	25.00	-5.53	-2.62	-386.44	3.73	8.73	-0.32
		1	48	25.00	-33.98	-3.65	-387.41	9.22	70.89	0.75
		2	48	25.00	-29.80	-3.65	-306.08	9.22	65.29	0.75
		1	49	25.00	-15.51	-0.10	-334.78	-0.22	33.14	-0.30
		2	49	25.00	-17.17	-0.10	-341.38	-0.22	35.37	-0.30
		1	50	25.00	-22.19	-6.17	-443.19	13.16	44.05	0.72
		2	50	25.00	-18.16	-6.17	-351.14	13.16	38.64	0.72
Nodo					Fx	Fy	Fz	Mx	My	Mz

Nodo	Tipo	Palo	Cmb	Quota	Fx	Fy	Fz	Mx	My	Mz
					-33.98	-18.67	-803.50	-96.51	-66.36	-0.88
					31.14	46.52	-27.39	40.91	70.89	0.90

VERIFICHE ELEMENTI TRAVE C.A.

LEGENDA TABELLA VERIFICHE ELEMENTI TRAVE C.A.

In tabella vengono riportati per ogni elemento il numero dello stesso ed il codice di verifica.

Nel caso in cui si sia proceduto alla progettazione con le tensioni ammissibili vengono riportate le massime tensioni nell'elemento (massima compressione nel calcestruzzo, massima compressione media nel calcestruzzo, massima tensione nell'acciaio, massima tensione tangenziale) con l'indicazione delle combinazioni in cui si sono attinti i rispettivi valori.

Nel caso in cui si sia proceduto alla progettazione con il metodo degli stati limite vengono riportati il rapporto x/d, le verifiche per sollecitazioni proporzionali e la verifica per compressione media con l'indicazione delle combinazioni in cui si sono attinti i rispettivi valori.

Per gli elementi tipo pilastro sono riportati numero e diametro dei ferri di vertice, numero e diametro di ferri disposti lungo i lati L1 (paralleli alla base della sezione) e lungo i lati L2 (paralleli all'altezza della sezione).

Per gli elementi tipo trave sono riportati infine le quantità di armatura inferiore e superiore.

I simboli utilizzati con il metodo degli stati limite assumono il seguente significato:

r. snell.	Rapporto λ su λ^*: valore superiore a 1 per elementi snelli, caso in cui viene effettuata la verifica con il metodo diretto dello stato di equilibrio
Verifica(verif.)	rapporto Sd/Su con sollecitazioni ultime proporzionali o a sforzo normale costante: valore minore o uguale a 1 per verifica positiva
ver.sis	rapporto Nd/Nu con Nu calcolato come al punto 7.4.4.2.2.1; valore minore o uguale a 1 per verifica positiva
ver.V/T	rapporto Sd/Su con sollecitazioni taglianti e torcenti proporzionali valore minore o uguale a 1 per verifica positiva
x/d	rapporto tra posizione dell'asse neutro e altezza utile alla rottura della sezione (per sola flessione)

Per gli elementi progettati secondo il criterio della gerarchia delle resistenze (pilastri e travi) si riporta una ulteriore tabella di seguito descritta:

M negativo i	Valore del momento resistente negativo (positivo) all' estremità iniziale i (finale f) della trave
V M-i M+f	Taglio generato dai momenti resistenti negativo i e positivo f (positivo i e negativo f)
V totale	Massimo valore assoluto ottenuto per combinazione del taglio isostatico e dei tagli concomitanti (p.to 7.4.4.1.1.)
Verif. V	Rapporto tra il taglio massimo e Vr1 (p.to 7.4.4.1.2.2);
Sovr. 2-2 i	Sovraresistenza del pilastro (come da formula 7.4.4). Rapporto tra i momenti resistenti delle travi e dei pilastri. Il valore del fattore rispettivamente per il momento 2-2 (3-3) alla base i ed alla sommità f del pilastro deve essere maggiore del gammaRd adottato
M 2-2 i	Valore del momento resistente rispettivamente per 2-2 (3-3) alla base i ed alla sommità f del pilastro (massimo momento in presenza dello sforzo normale di calcolo)
Luce per V	Luce di calcolo per la definizione del taglio (generato dai momenti resistenti)
V M2-2	Valore del taglio generato dai momenti resistenti 2-2 (3-3)

Per i nodi trave-pilastro viene riportata la seguente tabella relativa al calcolo delle armature di confinamento e alla verifica di resistenza del nodo (richiesta solo per strutture in classe di duttilità alta); le caselle vuote indicano parametri non riportati in quanto non necessari.

Stato	Esito della verifica (come da formula 7.4.8) per resistenza a compressione del nodo (solo CDA)
I 7.4.29	Passo delle staffe di confinamento come richiesto dalla formula 7.4.29
Bj2(3)	Dimensione del nodo per il taglio in direzione 2 (3)
Hjc2(2)	Distanza tra le giaciture di armatura del pilastro per il taglio in direzione 2 (3)
V. 7.4.8	Rapporto tra il taglio Vjbd e il taglio resistente come da formula 7.4.8 (solo CDA)
I 7.4.10	Passo delle staffe valutato in funzione della formula 7.4.10 (solo CDA)

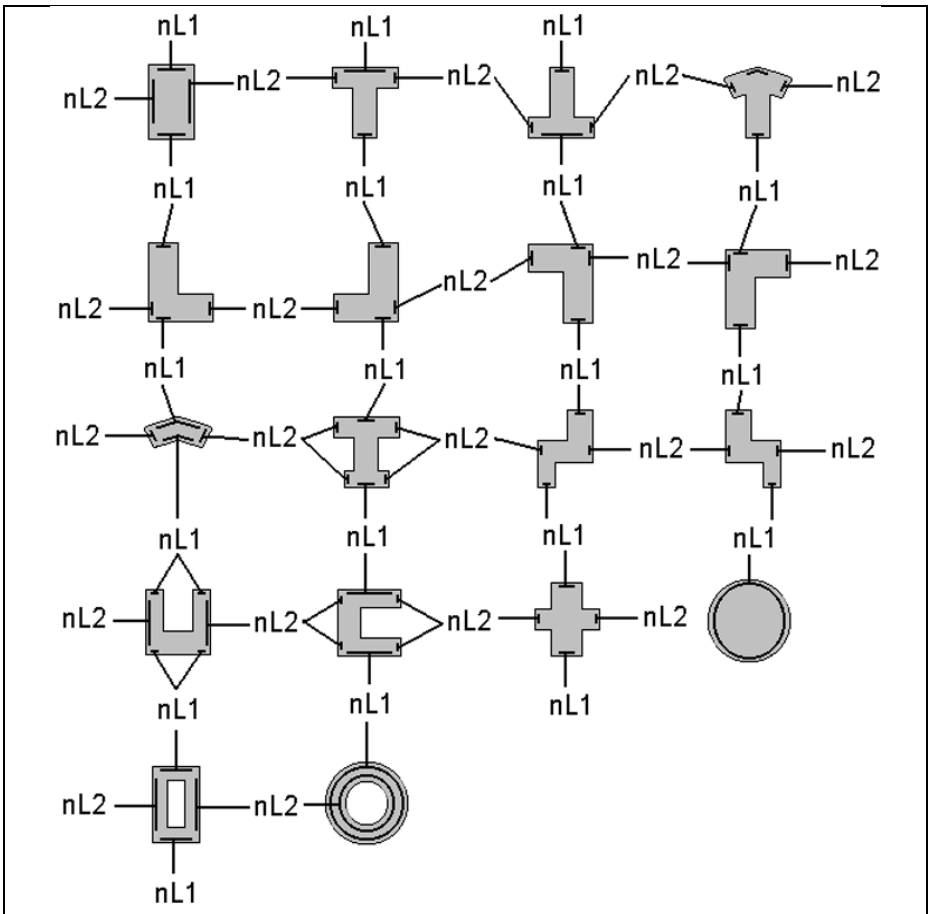

schema della distribuzione delle armature longitudinali

Con riferimento al **Documento di Affidabilità** "*Test di validazione del software di calcolo PRO_SAP e dei moduli aggiuntivi PRO_SAP Modulo Geotecnico, PRO_CAD nodi acciaio e PRO_MST*" - versione Maggio 2011, disponibile per il download sul sito **www.2si.it**, si segnalano i seguenti esempi applicativi:

Test N°	Titolo
24	TENSIONI E ROTAZIONI RISPETTO ALLA CORDA DI ELEMENTI TRAVE
27	FRECCIA DI ELEMENTI TRAVE
41	GERARCHIA DELLE RESISTENZE PER TRAVI IN C.A.
42	GERARCHIA DELLE RESISTENZE PER PILASTRI IN C.A.
43	VERIFICA ALLE TA DI STRUTTURE IN C.A.
44	VERIFICA AGLI SLU DI STRUTTURE IN C.A.
46	VERIFICA A PUNZONAMENTO ALLO SLU DI TRAVI IN C.A.
47	PROGETTAZIONE A TAGLIO DI STRUTTURE IN C.A. SECONDO IL D.M. 9/1/96
48	PROGETTAZIONE A TAGLIO DI STRUTTURE IN C.A. SECONDO IL D.M. 14/1/2008
49	VERIFICA ALLO SLE (TENSIONI E FESSURAZIONE) DI STRUTTURE IN C.A.

50	VERIFICA ALLO SLE (DEFORMAZIONE) DI STRUTTURE IN C.A.
52	SOVRARESISTENZE
53	DETTAGLI COSTRUTTIVI C.A.: LIMITI D'ARMATURA PILASTRI E NODI TRAVE-PILASTRO
68	VALUTAZIONE EFFETTO P-δ SU PILASTRATA

PROGETTAZIONE DELLE STRUTTURE DI NUOVA REALIZZAZIONE

M_P= 31 X=386.0 Y=2531.0

Pilas.	Note	Stato	Quota cm	%Af	r. snell.	Armat. long.	verif.	ver.sis	Staffe L=cm	v V/T cls	v V/T acc	Rif. cmb
248s=21,m=4		ok,ok	135.0	1.11	0.52	4d16 6+8 d16	0.33	0.13	2+2d8/13 L=75	0.09	0.28	30,4,30,42
			320.0	1.11	0.52	4d16 6+8 d16	0.13	0.13	2+2d8/24 L=220	0.09	0.52	4,4,30,42
[b=1.0;1.0]			505.0	1.11	0.52	4d16 6+8 d16	0.17	0.12	2+2d8/13 L=75	0.09	0.28	4,4,30,42
270s=21,m=4		ok,ok	505.0	1.11	0.23	4d16 6+8 d16	0.36	0.06	2+2d8/13 L=75	0.16	0.61	42,11,30,42
			630.0	1.11	0.23	4d16 6+8 d16	0.07	0.06	2+2d8/21 L=100	0.16	1.00	25,11,30,42
[b=1.0;1.0]			755.0	1.11	0.23	4d16 6+8 d16	0.08	0.05	2+2d8/13 L=75	0.16	0.61	30,11,30,42
290s=21,m=4		ok,ok	755.0	1.11	0.11	4d16 6+8 d16	0.09	0.02	2+2d8/13 L=75	0.03	0.11	42,11,38,38
			875.0	1.11	0.11	4d16 6+8 d16	0.04	0.01	2+2d8/24 L=90	0.03	0.20	43,11,38,38
[b=1.0;1.0]			995.0	1.11	0.11	4d16 6+8 d16	0.05	0.01	2+2d8/13 L=75	0.03	0.11	11,11,38,38

M_P= 32 X=1066.0 Y=2531.0

Pilas.	Note	Stato	Quota	%Af	r. snell.	Armat. long.	verif.	ver.sis	Staffe	v V/T cls	v V/T acc	Rif. cmb
246s=20,m=4		ok,ok	135.0	1.11	0.67	4d16 8+6 d16	0.26	0.22	2+2d8/13 L=75	0.08	0.28	24,4,30,42
			320.0	1.11	0.67	4d16 8+6 d16	0.21	0.21	2+2d8/24 L=220	0.08	0.52	4,4,30,42
[b=1.0;1.0]			505.0	1.11	0.67	4d16 8+6 d16	0.24	0.21	2+2d8/13 L=75	0.08	0.28	4,4,30,42
268s=20,m=4		ok,ok	505.0	1.11	0.32	4d16 8+6 d16	0.33	0.11	2+2d8/13 L=75	0.16	0.55	30,11,24,36
			630.0	1.11	0.32	4d16 8+6 d16	0.10	0.11	2+2d8/24 L=100	0.16	1.00	11,11,24,36
[b=1.0;1.0]			755.0	1.11	0.32	4d16 8+6 d16	0.10	0.10	2+2d8/13 L=75	0.16	0.55	9,11,24,36
289s=20,m=4		ok,ok	755.0	1.11	0.15	4d16 8+6 d16	0.08	0.03	2+2d8/13 L=75	0.05	0.12	45,9,37,23
			875.0	1.11	0.15	4d16 8+6 d16	0.04	0.02	2+2d8/24 L=90	0.05	0.23	45,9,37,23
[b=1.0;1.0]			995.0	1.11	0.15	4d16 8+6 d16	0.03	0.02	2+2d8/13 L=75	0.05	0.12	25,9,37,23

M_P= 33 X=1746.0 Y=2531.0

Pilas.	Note	Stato	Quota	%Af	r. snell.	Armat. long.	verif.	ver.sis	Staffe	v V/T cls	v V/T acc	Rif. cmb
309s=20,m=4		ok,ok	135.0	1.11	0.67	4d16 8+6 d16	0.28	0.22	2+2d8/13 L=75	0.08	0.31	24,4,24,36
			320.0	1.11	0.67	4d16 8+6 d16	0.21	0.21	2+2d8/24 L=220	0.08	0.57	4,4,24,36
[b=1.0;1.0]			505.0	1.11	0.67	4d16 8+6 d16	0.24	0.21	2+2d8/13 L=75	0.08	0.31	4,4,24,36
266s=20,m=4		ok,ok	505.0	1.11	0.32	4d16 8+6 d16	0.32	0.11	2+2d8/13 L=75	0.15	0.53	30,11,24,36
			630.0	1.11	0.32	4d16 8+6 d16	0.10	0.11	2+2d8/24 L=100	0.15	0.99	11,11,24,36
[b=1.0;1.0]			755.0	1.11	0.32	4d16 8+6 d16	0.10	0.10	2+2d8/13 L=75	0.15	0.53	9,11,24,36
288s=20,m=4		ok,ok	755.0	1.11	0.14	4d16 8+6 d16	0.08	0.03	2+2d8/13 L=75	0.04	0.12	33,9,44,28
			875.0	1.11	0.14	4d16 8+6 d16	0.04	0.02	2+2d8/24 L=90	0.04	0.22	35,9,44,28
[b=1.0;1.0]			995.0	1.11	0.14	4d16 8+6 d16	0.03	0.02	2+2d8/13 L=75	0.04	0.12	25,9,44,28

M_P= 34 X=2380.0 Y=2531.0

Pilas.	Note	Stato	Quota	%Af	r. snell.	Armat. long.	verif.	ver.sis	Staffe	v V/T cls	v V/T acc	Rif. cmb
247s=21,m=4		ok,ok	135.0	1.11	0.52	4d16 6+8 d16	0.31	0.13	2+2d8/13 L=75	0.10	0.32	24,4,24,24
			320.0	1.11	0.52	4d16 6+8 d16	0.14	0.13	2+2d8/24 L=220	0.10	0.58	4,4,24,24
[b=1.0;1.0]			505.0	1.11	0.52	4d16 6+8 d16	0.16	0.12	2+2d8/13 L=75	0.10	0.32	36,4,24,24
269s=21,m=4		ok,ok	505.0	1.11	0.23	4d16 6+8 d16	0.36	0.06	2+2d8/13 L=75	0.16	0.60	36,11,24,36
			630.0	1.11	0.23	4d16 6+8 d16	0.08	0.06	2+2d8/22 L=100	0.16	1.00	24,11,24,36
[b=1.0;1.0]			755.0	1.11	0.23	4d16 6+8 d16	0.08	0.05	2+2d8/13 L=75	0.16	0.60	24,11,24,36
287s=21,m=4		ok,ok	755.0	1.11	0.11	4d16 6+8 d16	0.10	0.02	2+2d8/13 L=75	0.04	0.12	36,11,44,44
			875.0	1.11	0.11	4d16 6+8 d16	0.04	0.01	2+2d8/24 L=90	0.04	0.22	37,11,44,44
[b=1.0;1.0]			995.0	1.11	0.11	4d16 6+8 d16	0.05	0.01	2+2d8/13 L=75	0.04	0.12	11,11,44,44

M_P= 35 X=386.0 Y=3211.0

Pilas.	Note	Stato	Quota	%Af	r. snell.	Armat. long.	verif.	ver.sis	Staffe	v V/T cls	v V/T acc	Rif. cmb
250	s=1,m=4	ok,ok	135.0	1.09	0.13	8d18 16+18 d18	0.22	0.05	2+2d8/15 L=130	0.14	0.52	29,4,29,25
			320.0	1.09	0.13	8d18 16+18 d18	0.11	0.05	2+2d8/20 L=110	0.14	0.69	42,4,29,25
[b=1.0;1.0]			505.0	1.09	0.13	8d18 16+18 d18	0.05	0.05	2+2d8/15 L=130	0.14	0.52	4,4,29,25
272	s=1,m=4	ok,ok	505.0	1.09	0.05	8d18 16+18 d18	0.09	0.02	2+2d8/20 L=250	0.10	0.53	44,11,4,4
[b=1.0;1.0]			755.0	1.09	0.05	8d18 16+18 d18	0.07	0.02	2+2d8/20 L=250	0.10	0.53	25,11,4,4

M_P= 36 X=1066.0 Y=3211.0

Pilas.	Note	Stato	Quota	%Af	r. snell.	Armat. long.	verif.	ver.sis	Staffe	v V/T cls	v V/T acc	Rif. cmb
245s=20,m=4		ok,ok	135.0	1.11	0.61	4d16 8+6 d16	0.39	0.18	2+2d8/13 L=75	0.12	0.36	27,4,25,37
			320.0	1.11	0.61	4d16 8+6 d16	0.19	0.18	2+2d8/24 L=220	0.12	0.66	4,4,25,37
[b=1.0;1.0]			505.0	1.11	0.61	4d16 8+6 d16	0.18	0.17	2+2d8/13 L=75	0.12	0.36	4,4,25,37
267s=20,m=4		ok,ok	505.0	1.11	0.26	4d16 8+6 d16	0.29	0.07	2+2d8/13 L=75	0.18	0.63	25,11,25,25
			630.0	1.11	0.26	4d16 8+6 d16	0.07	0.07	2+2d8/21 L=100	0.18	1.00	9,11,25,25
[b=1.0;1.0]			755.0	1.11	0.26	4d16 8+6 d16	0.17	0.07	2+2d8/13 L=75	0.18	0.63	25,11,25,25

M_P= 37 X=1746.0 Y=3211.0

Pilas.	Note	Stato	Quota	%Af	r. snell.	Armat. long.	verif.	ver.sis	Staffe	v V/T cls	v V/T acc	Rif. cmb

308	s=20,m=4	ok,ok	135.0	1.11	0.61	4d16 8+6 d16	0.37	0.18	2+2d8/13 L=75	0.11	0.33	27,4,25,37
			320.0	1.11	0.61	4d16 8+6 d16	0.19	0.18	2+2d8/24 L=220	0.11	0.62	4,4,25,37
	[b=1.0;1.0]		505.0	1.11	0.61	4d16 8+6 d16	0.17	0.17	2+2d8/13 L=75	0.11	0.33	4,4,25,37
265	s=20,m=4	ok,ok	505.0	1.11	0.26	4d16 8+6 d16	0.22	0.08	2+2d8/13 L=75	0.14	0.48	27,11,25,24
			630.0	1.11	0.26	4d16 8+6 d16	0.07	0.07	2+2d8/24 L=100	0.14	0.89	11,11,25,24
	[b=1.0;1.0]		755.0	1.11	0.26	4d16 8+6 d16	0.15	0.07	2+2d8/13 L=75	0.14	0.48	27,11,25,24

M_P= 38 X=2380.0 Y=3211.0

Pilas.	Note	Stato	Quota	%Af	r. snell.	Armat. long.	verif.	ver.sis	Staffe	v V/T cls	v V/T acc	Rif. cmb
249	s=1,m=4	ok,ok	135.0	1.09	0.13	8d18 16+18 d18	0.27	0.05	2+2d8/15 L=130	0.12	0.45	23,4,23,23
			320.0	1.09	0.13	8d18 16+18 d18	0.09	0.05	2+2d8/20 L=110	0.12	0.61	35,4,23,23
	[b=1.0;1.0]		505.0	1.09	0.13	8d18 16+18 d18	0.05	0.05	2+2d8/15 L=130	0.12	0.45	4,4,23,23
271	s=1,m=4	ok,ok	505.0	1.09	0.05	8d18 16+18 d18	0.12	0.02	2+2d8/20 L=250	0.11	0.51	3,11,4,4
	[b=1.0;1.0]		755.0	1.09	0.05	8d18 16+18 d18	0.08	0.02	2+2d8/20 L=250	0.11	0.51	23,11,4,4

Pilas.	**%Af**	**r. snell.**	**verif.**	**ver.sis**	**v V/T cls**	**v V/T acc**
	1.11	0.67	0.39	0.22	0.18	1.00

M_T= 74 Z=505.0 P=30 P=38

Trave	Note	Pos. cm	%Af	Af inf.	Af. sup	Af long.	x/d	V N/M	V V/T cls	V V/T acc	Staffe L=cm	Rif. cmb
252	ok,ok	0.0	0.33	9.1	9.1	0.0	0.11	0.32	0.14	0.34	2d8/15 L=54	36,36,36
	s=22,m=4	147.0	0.33	9.1	9.1	0.0	0.11	0.02	0.12	0.34	2d8/20 L=94	3,36,36
		294.0	0.33	9.1	9.1	0.0	0.11	0.23	0.10	0.22	2d8/15 L=50	37,36,37
251	ok,ok	0.0	0.33	9.1	9.1	0.0	0.11	0.97	0.14	0.65	2d8/15 L=100	38,3,3
	s=22,m=4	340.0	0.33	9.1	9.1	0.0	0.11	0.76	0.04	0.19	2d8/20 L=480	4,37,35
		680.0	0.35	9.1	9.8	0.0	0.12	0.99	0.15	0.70	2d8/15 L=51	4,4,4

M_T= 75 Z=505.0 P=28 P=37

Trave	Note	Pos.	%Af	Af inf.	Af. sup	Af long.	x/d	V N/M	V V/T cls	V V/T acc	Staffe	Rif. cmb
254	ok,ok	0.0	0.33	9.1	9.1	0.0	0.11	0.41	0.07	0.22	2d8/15 L=100	36,29,36
	s=22,m=4	147.0	0.33	9.1	9.1	0.0	0.11	0.06	0.08	0.28	2d8/20 L=94	36,29,37
		294.0	0.33	9.1	9.1	0.0	0.11	0.25	0.08	0.23	2d8/15 L=35	36,29,37
253	ok,ok	0.0	0.46	9.1	12.8	0.0	0.13	0.98	0.20	0.89	2d8/15 L=100	4,4,4
	s=22,m=4	340.0	0.33	9.1	9.1	0.0	0.11	0.95	0.03	0.12	2d8/20 L=480	4,31,37
		680.0	0.33	9.1	9.1	0.0	0.11	0.89	0.17	0.78	2d8/15 L=35	3,4,3

M_T= 76 Z=505.0 P=26 P=36

Trave	Note	Pos.	%Af	Af inf.	Af. sup	Af long.	x/d	V N/M	V V/T cls	V V/T acc	Staffe	Rif. cmb
256	ok,ok	0.0	0.33	9.1	9.1	0.0	0.11	0.44	0.07	0.23	2d8/15 L=100	44,26,40
	s=22,m=4	147.0	0.33	9.1	9.1	0.0	0.11	0.05	0.08	0.27	2d8/20 L=94	40,41,43
		294.0	0.33	9.1	9.1	0.0	0.11	0.26	0.08	0.22	2d8/15 L=35	40,41,43
255	ok,ok	0.0	0.47	9.1	13.1	0.0	0.14	0.98	0.20	0.92	2d8/15 L=100	4,4,4
	s=22,m=4	340.0	0.33	9.1	9.1	0.0	0.11	0.97	0.03	0.12	2d8/20 L=480	4,45,43
		680.0	0.33	9.1	9.1	0.0	0.11	0.89	0.18	0.80	2d8/15 L=35	3,4,3

M_T= 77 Z=505.0 P=35 P=38

Trave	Note	Pos.	%Af	Af inf.	Af. sup	Af long.	x/d	V N/M	V V/T cls	V V/T acc	Staffe	Rif. cmb
259	ok,ok	0.0	0.33	4.2	9.3	0.0	0.12	0.98	0.10	0.34	2d8/12 L=18	25,30,25
	s=22,m=4	340.0	0.15	4.2	2.5	0.0	0.09	0.78	0.04	0.16	2d8/20 L=547	24,30,25
		680.0	0.33	4.2	9.3	0.0	0.12	0.99	0.10	0.32	2d8/12 L=16	24,27,24
258	ok,ok	0.0	0.26	4.2	7.2	0.0	0.11	0.99	0.09	0.30	2d8/12 L=66	25,25,25
	s=22,m=4	340.0	0.15	4.2	1.4	0.0	0.09	0.79	0.04	0.15	2d8/20 L=547	4,24,24
		680.0	0.33	3.7	9.4	0.0	0.13	0.99	0.10	0.35	2d8/12 L=16	27,24,3
257	ok,ok	0.0	0.27	4.2	7.6	0.0	0.11	0.99	0.09	0.29	2d8/12 L=66	30,25,25
	s=22,m=4	317.0	0.15	4.2	2.8	0.0	0.08	0.91	0.05	0.23	2d8/20 L=501	25,24,24
		634.0	0.38	4.2	10.7	0.0	0.13	0.98	0.11	0.37	2d8/12 L=18	24,24,24

M_T= 78 Z=505.0 P=31 P=34

Trave	Note	Pos.	%Af	Af inf.	Af. sup	Af long.	x/d	V N/M	V V/T cls	V V/T acc	Staffe	Rif. cmb
262	ok,ok	0.0	0.33	9.1	9.1	0.0	0.11	0.46	0.07	0.30	2d8/15 L=35	30,4,4
	s=22,m=4	340.0	0.33	9.1	9.1	0.0	0.11	0.25	0.03	0.15	2d8/20 L=480	24,23,24
		680.0	0.33	9.1	9.1	0.0	0.11	0.70	0.08	0.37	2d8/15 L=50	24,4,3
261	ok,ok	0.0	0.33	9.1	9.1	0.0	0.11	0.71	0.08	0.37	2d8/15 L=100	30,25,3
	s=22,m=4	340.0	0.33	9.1	9.1	0.0	0.11	0.34	0.03	0.14	2d8/20 L=480	4,24,24
		680.0	0.33	9.1	9.1	0.0	0.11	0.71	0.08	0.38	2d8/15 L=50	24,24,4
260	ok,ok	0.0	0.33	9.1	9.1	0.0	0.11	0.80	0.08	0.35	2d8/15 L=100	30,4,25
	s=22,m=4	317.0	0.33	9.1	9.1	0.0	0.11	0.32	0.03	0.16	2d8/20 L=434	3,24,24
		634.0	0.33	9.1	9.1	0.0	0.11	0.60	0.08	0.33	2d8/15 L=35	24,4,24

M_T= 79 Z=505.0 P=24 P=35

Trave	Note	Pos.	%Af	Af inf.	Af. sup	Af long.	x/d	V N/M	V V/T cls	V V/T acc	Staffe	Rif. cmb
264	ok,ok	0.0	0.33	9.1	9.1	0.0	0.11	0.35	0.15	0.35	2d8/15 L=54	42,42,42
	s=22,m=4	147.0	0.33	9.1	9.1	0.0	0.11	0.02	0.13	0.35	2d8/20 L=94	3,42,42
		294.0	0.33	9.1	9.1	0.0	0.11	0.25	0.11	0.22	2d8/15 L=50	42,42,43
263	ok,ok	0.0	0.33	9.1	9.2	0.0	0.11	0.99	0.14	0.67	2d8/15 L=100	44,3,3
	s=22,m=4	340.0	0.33	9.1	9.1	0.0	0.11	0.79	0.04	0.19	2d8/20 L=480	4,43,43
		680.0	0.36	9.1	10.0	0.0	0.12	0.99	0.15	0.72	2d8/15 L=51	4,4,4

M_T= 80 Z=755.0 P=30 P=38

Trave	Note	Pos.	%Af	Af inf.	Af. sup	Af long.	x/d	V N/M	V V/T cls	V V/T acc	Staffe	Rif. cmb
274	ok,ok	0.0	0.33	9.1	9.1	0.0	0.11	0.34	0.10	0.22	2d8/15 L=54	36,34,36

s=22,m=4	147.0	0.33	9.1	9.1	0.0	0.11	0.05	0.09	0.27	2d8/20	L=94	36,34,36
	294.0	0.33	9.1	9.1	0.0	0.11	0.25	0.09	0.18	2d8/15	L=50	36,34,36
273 ok,ok	0.0	0.33	9.1	9.1	0.0	0.11	0.53	0.12	0.32	2d8/15	L=100	36,24,3
s=22,m=4	340.0	0.33	9.1	9.1	0.0	0.11	0.38	0.08	0.18	2d8/20	L=480	4,25,37
	680.0	0.33	9.1	9.1	0.0	0.11	0.78	0.13	0.42	2d8/15	L=51	37,25,4
						M_T= 82	**Z=755.0**	**P=28**	**P=37**			
Trave Note	Pos.	%Af	Af inf.	Af. sup	Af long.	x/d	V N/M	V V/T cls	V V/T acc	Staffe	Rif. cmb	
276 ok,ok	0.0	0.33	5.2	5.2	0.0	0.17	0.49	0.17	0.09	4d8/15	L=100	36,16,36
s=25,m=4	147.0	0.33	5.2	5.2	0.0	0.17	0.08	0.16	0.05	4d8/15	L=94	15,19,37
	294.0	0.33	5.2	5.2	0.0	0.17	0.22	0.17	0.07	4d8/15	L=35	31,19,37
307 ok,ok	0.0	0.33	9.1	9.1	0.0	0.11	0.80	0.11	0.50	2d8/15	L=100	38,3,3
s=22,m=4	340.0	0.33	9.1	9.1	0.0	0.11	0.63	0.03	0.12	2d8/20	L=480	3,25,35
	680.0	0.33	9.1	9.1	0.0	0.11	0.64	0.10	0.46	2d8/15	L=35	35,3,4
						M_T= 83	**Z=755.0**	**P=26**	**P=36**			
Trave Note	Pos.	%Af	Af inf.	Af. sup	Af long.	x/d	V N/M	V V/T cls	V V/T acc	Staffe	Rif. cmb	
278 ok,ok	0.0	0.33	5.2	5.2	0.0	0.17	0.53	0.17	0.09	4d8/15	L=100	40,16,40
s=25,m=4	147.0	0.33	5.2	5.2	0.0	0.17	0.17	0.17	0.06	4d8/15	L=94	23,16,40
	294.0	0.33	5.2	5.2	0.0	0.17	0.28	0.16	0.07	4d8/15	L=35	39,19,43
277 ok,ok	0.0	0.33	9.1	9.1	0.0	0.11	0.75	0.13	0.48	2d8/15	L=100	42,4,3
s=22,m=4	340.0	0.33	9.1	9.1	0.0	0.11	0.57	0.05	0.12	2d8/20	L=480	3,27,43
	680.0	0.33	9.1	9.1	0.0	0.11	0.61	0.12	0.44	2d8/15	L=35	43,4,4
						M_T= 84	**Z=755.0**	**P=35**	**P=38**			
Trave Note	Pos.	%Af	Af inf.	Af. sup	Af long.	x/d	V N/M	V V/T cls	V V/T acc	Staffe	Rif. cmb	
281 ok,ok	0.0	0.33	9.1	9.1	0.0	0.11	0.64	0.08	0.32	2d8/15	L=51	25,11,11
s=22,m=4	340.0	0.33	9.1	9.1	0.0	0.11	0.30	0.04	0.13	2d8/20	L=480	24,27,25
	680.0	0.33	9.1	9.1	0.0	0.11	0.53	0.08	0.29	2d8/15	L=50	24,27,9
280 ok,ok	0.0	0.33	9.1	9.1	0.0	0.11	0.52	0.07	0.33	2d8/15	L=100	25,11,9
s=22,m=4	340.0	0.33	9.1	9.1	0.0	0.11	0.34	0.02	0.09	2d8/20	L=480	11,24,24
	680.0	0.33	9.1	9.1	0.0	0.11	0.49	0.07	0.33	2d8/15	L=50	27,11,11
279 ok,ok	0.0	0.33	9.1	9.1	0.0	0.11	0.50	0.09	0.27	2d8/15	L=100	30,25,9
s=22,m=4	317.0	0.33	9.1	9.1	0.0	0.11	0.27	0.05	0.19	2d8/20	L=434	30,24,24
	634.0	0.33	9.1	9.1	0.0	0.11	0.70	0.09	0.35	2d8/15	L=51	24,11,11
						M_T= 85	**Z=755.0**	**P=31**	**P=34**			
Trave Note	Pos.	%Af	Af inf.	Af. sup	Af long.	x/d	V N/M	V V/T cls	V V/T acc	Staffe	Rif. cmb	
284 ok,ok	0.0	0.33	15.6	15.6	0.0	0.10	0.19	0.06	0.17	2d8/15	L=51	28,37,25
s=23,m=4	340.0	0.33	15.6	15.6	0.0	0.10	0.15	0.04	0.11	2d8/18	L=447	28,35,24
	680.0	0.33	15.6	15.6	0.0	0.10	0.31	0.07	0.24	2d8/15	L=66	27,35,24
283 ok,ok	0.0	0.33	15.6	15.6	0.0	0.10	0.24	0.05	0.21	2d8/15	L=116	25,25,1
s=23,m=4	340.0	0.33	15.6	15.6	0.0	0.10	0.09	0.03	0.07	2d8/18	L=447	11,24,24
	680.0	0.33	15.6	15.6	0.0	0.10	0.23	0.06	0.22	2d8/15	L=66	27,24,4
282 ok,ok	0.0	0.33	15.6	15.6	0.0	0.10	0.33	0.07	0.23	2d8/15	L=116	25,45,25
s=23,m=4	317.0	0.33	15.6	15.6	0.0	0.10	0.16	0.04	0.08	2d8/18	L=401	25,43,24
	634.0	0.33	15.6	15.6	0.0	0.10	0.18	0.07	0.20	2d8/15	L=51	27,43,24
						M_T= 86	**Z=755.0**	**P=24**	**P=35**			
Trave Note	Pos.	%Af	Af inf.	Af. sup	Af long.	x/d	V N/M	V V/T cls	V V/T acc	Staffe	Rif. cmb	
286 ok,ok	0.0	0.33	9.1	9.1	0.0	0.11	0.35	0.12	0.22	2d8/15	L=54	42,40,42
s=22,m=4	147.0	0.33	9.1	9.1	0.0	0.11	0.06	0.11	0.27	2d8/20	L=94	42,40,42
	294.0	0.33	9.1	9.1	0.0	0.11	0.25	0.11	0.18	2d8/15	L=50	42,40,42
285 ok,ok	0.0	0.33	9.1	9.1	0.0	0.11	0.57	0.12	0.37	2d8/15	L=100	40,30,3
s=22,m=4	340.0	0.33	9.1	9.1	0.0	0.11	0.43	0.08	0.18	2d8/20	L=480	4,27,43
	680.0	0.33	9.1	9.1	0.0	0.11	0.81	0.14	0.47	2d8/15	L=51	43,27,4
						M_T= 87	**Z=995.0**	**P=31**	**P=34**			
Trave Note	Pos.	%Af	Af inf.	Af. sup	Af long.	x/d	V N/M	V V/T cls	V V/T acc	Staffe	Rif. cmb	
293 ok,ok	0.0	0.33	6.9	6.9	0.0	0.12	0.16	0.05	0.22	2d8/15	L=35	11,9,11
s=6,m=4	340.0	0.33	6.9	6.9	0.0	0.12	0.26	0.03	0.03	2d8/19	L=480	9,35,23
	680.0	0.33	6.9	6.9	0.0	0.12	0.39	0.06	0.26	2d8/15	L=50	9,9,9
292 ok,ok	0.0	0.33	6.9	6.9	0.0	0.12	0.47	0.05	0.27	2d8/15	L=100	9,11,9
s=6,m=4	340.0	0.33	6.9	6.9	0.0	0.12	0.26	0.02	0.03	2d8/19	L=480	9,24,24
	680.0	0.33	6.9	6.9	0.0	0.12	0.38	0.05	0.26	2d8/15	L=50	9,11,11
291 ok,ok	0.0	0.33	6.9	6.9	0.0	0.12	0.44	0.06	0.27	2d8/15	L=100	9,11,9
s=6,m=4	317.0	0.33	6.9	6.9	0.0	0.12	0.23	0.03	0.02	2d8/19	L=434	9,43,24
	634.0	0.33	6.9	6.9	0.0	0.12	0.18	0.06	0.22	2d8/15	L=35	11,11,11

Trave	**%Af**	**Af inf.**	**Af. sup**	**Af long.**	**x/d**	**V N/M**	**V V/T cls**	**V V/T acc**	
		0.47	15.63	15.63	0.0	0.17	0.99	0.20	0.92

VERIFICA STRUTTURE ESISTENTI

					M_P= 9	**X=386.0**	**Y=1171.0**					
Pilas.	Note	Stato	Quota	%Af	r. snell.	Armat. long.	verif.	ver.sis	Staffe	v V/T cls	v V/T acc	Rif. cmb
			cm						L=cm			
188	s=6,m=1	ok	135.0	0.58	0.47	4d14 2+2 d14	0.24	0.172+2d6/18	L=370	0.08	0.39	43,43,27,43
	[b=1.0;1.0]		505.0	0.58	0.47	4d14 2+2 d14	0.25	0.162+2d6/18	L=370	0.08	0.39	43,43,27,43
201	s=6,m=1	ok	505.0	0.58	0.19	4d14 2+2 d14	0.75	0.072+2d6/18	L=250	0.17	0.93	43,43,41,43
	[b=1.0;1.0]		755.0	0.58	0.19	4d14 2+2 d14	0.34	0.062+2d6/18	L=250	0.17	0.93	43,43,41,43
					M_P= 10	**X=726.0**	**Y=1171.0**					
Pilas.	Note	Stato	Quota	%Af	r. snell.	Armat. long.	verif.	ver.sis	Staffe	v V/T cls	v V/T acc	Rif. cmb
29	s=6,m=1	ok	135.0	0.58	0.46	4d14 2+2 d14	0.19	0.172+2d6/18	L=370	0.06	0.24	42,26,37,25
	[b=1.0;1.0]		505.0	0.58	0.46	4d14 2+2 d14	0.17	0.162+2d6/18	L=370	0.06	0.24	22,26,37,25
124	s=6,m=1	ok	505.0	0.58	0.25	4d14 2+2 d14	0.14	0.112+2d6/18	L=250	0.12	0.40	42,26,30,30
	[b=1.0;1.0]		755.0	0.58	0.25	4d14 2+2 d14	0.16	0.102+2d6/18	L=250	0.12	0.40	30,26,30,30
210	s=6,m=1	ok	755.0	0.58	0.18	4d14 2+2 d14	0.32	0.042+2d6/18	L=300	0.21	0.66	15,26,16,19
	[b=1.0;1.0]		1055.0	0.58	0.18	4d14 2+2 d14	0.26	0.032+2d6/18	L=300	0.21	0.66	43,26,16,19
					M_P= 11	**X=1066.0**	**Y=1171.0**					
Pilas.	Note	Stato	Quota	%Af	r. snell.	Armat. long.	verif.	ver.sis	Staffe	v V/T cls	v V/T acc	Rif. cmb
30	s=6,m=1	ok	135.0	0.58	0.51	4d14 2+2 d14	0.23	0.202+2d6/18	L=370	0.08	0.34	41,4,32,33
	[b=1.0;1.0]		505.0	0.58	0.51	4d14 2+2 d14	0.25	0.192+2d6/18	L=370	0.08	0.34	41,4,32,33
125	s=6,m=1	ok	505.0	0.58	0.30	4d14 2+2 d14	0.45	0.162+2d6/18	L=250	0.10	0.57	43,4,43,43
	[b=1.0;1.0]		755.0	0.58	0.30	4d14 2+2 d14	0.24	0.152+2d6/18	L=250	0.10	0.57	4,4,43,43
228	s=6,m=1	ok	755.0	0.58	0.31	4d14 2+2 d14	0.34	0.122+2d6/18	L=300	0.23	0.79	18,3,18,18
	[b=1.0;1.0]		1055.0	0.58	0.31	4d14 2+2 d14	0.39	0.112+2d6/18	L=300	0.23	0.79	38,3,18,18
					M_P= 12	**X=1406.0**	**Y=1171.0**					
Pilas.	Note	Stato	Quota	%Af	r. snell.	Armat. long.	verif.	ver.sis	Staffe	v V/T cls	v V/T acc	Rif. cmb
31	s=6,m=1	ok	135.0	0.58	0.53	4d14 2+2 d14	0.22	0.222+2d6/18	L=370	0.06	0.21	15,4,15,20
	[b=1.0;1.0]		505.0	0.58	0.53	4d14 2+2 d14	0.21	0.202+2d6/18	L=370	0.06	0.21	4,4,15,20
126	s=6,m=1	ok	505.0	0.58	0.31	4d14 2+2 d14	0.16	0.162+2d6/18	L=250	0.07	0.28	4,11,16,16
	[b=1.0;1.0]		755.0	0.58	0.31	4d14 2+2 d14	0.21	0.152+2d6/18	L=250	0.07	0.28	15,11,16,16
189	s=6,m=1	ok	755.0	0.58	0.32	4d14 2+2 d14	0.19	0.122+2d6/18	L=300	0.18	0.61	20,9,28,23
	[b=1.0;1.0]		1055.0	0.58	0.32	4d14 2+2 d14	0.30	0.112+2d6/18	L=300	0.18	0.61	34,9,28,23
					M_P= 13	**X=1746.0**	**Y=1171.0**					
Pilas.	Note	Stato	Quota	%Af	r. snell.	Armat. long.	verif.	ver.sis	Staffe	v V/T cls	v V/T acc	Rif. cmb
32	s=6,m=1	ok	135.0	0.58	0.55	4d14 2+2 d14	0.26	0.232+2d6/18	L=370	0.08	0.38	37,4,37,37
	[b=1.0;1.0]		505.0	0.58	0.55	4d14 2+2 d14	0.27	0.222+2d6/18	L=370	0.08	0.38	37,4,37,37
127	s=6,m=1	ok	505.0	0.58	0.31	4d14 2+2 d14	0.44	0.162+2d6/18	L=250	0.11	0.51	37,4,25,43
	[b=1.0;1.0]		755.0	0.58	0.31	4d14 2+2 d14	0.24	0.152+2d6/18	L=250	0.11	0.51	4,4,25,43
197	s=6,m=1	ok	755.0	0.58	0.32	4d14 2+2 d14	0.35	0.122+2d6/18	L=300	0.26	0.88	18,3,18,34
	[b=1.0;1.0]		1055.0	0.58	0.32	4d14 2+2 d14	0.42	0.112+2d6/18	L=300	0.26	0.88	34,3,18,34
					M_P= 14	**X=2088.0**	**Y=1171.0**					
Pilas.	Note	Stato	Quota	%Af	r. snell.	Armat. long.	verif.	ver.sis	Staffe	v V/T cls	v V/T acc	Rif. cmb
33	s=6,m=1	ok	135.0	0.58	0.44	4d14 2+2 d14	0.19	0.162+2d6/18	L=370	0.08	0.29	36,3,37,36
	[b=1.0;1.0]		505.0	0.58	0.44	4d14 2+2 d14	0.15	0.142+2d6/18	L=370	0.08	0.29	34,3,37,36
128	s=6,m=1	ok	505.0	0.58	0.23	4d14 2+2 d14	0.12	0.092+2d6/18	L=250	0.12	0.40	36,36,18,18
	[b=1.0;1.0]		755.0	0.58	0.23	4d14 2+2 d14	0.15	0.082+2d6/18	L=250	0.12	0.40	22,36,18,18
203	s=6,m=1	ok	755.0	0.58	0.18	4d14 2+2 d14	0.26	0.042+2d6/18	L=300	0.20	0.63	18,44,24,19
	[b=1.0;1.0]		1055.0	0.58	0.18	4d14 2+2 d14	0.24	0.032+2d6/18	L=300	0.20	0.63	37,44,24,19
					M_P= 15	**X=2380.0**	**Y=1171.0**					
Pilas.	Note	Stato	Quota	%Af	r. snell.	Armat. long.	verif.	ver.sis	Staffe	v V/T cls	v V/T acc	Rif. cmb
56	s=6,m=1	ok	-65.0	0.58	0.0	4d14 2+2 d14	3.99e-03	4.49e-032+2d6/18	L=200	0.0	0.0	1,1,0,0
	[b=0.0;0.0]		135.0	0.58	0.0	4d14 2+2 d14	0.02	0.02+2d6/18	L=200	0.0	0.0	1,-1946149632,0,0
198	s=6,m=1	ok	135.0	0.58	0.47	4d14 2+2 d14	0.25	0.172+2d6/18	L=370	0.08	0.44	37,37,25,37
	[b=1.0;1.0]		505.0	0.58	0.47	4d14 2+2 d14	0.25	0.162+2d6/18	L=370	0.08	0.44	37,37,25,37
202	s=6,m=1	ok	505.0	0.58	0.19	4d14 2+2 d14	0.76	0.072+2d6/18	L=250	0.16	0.91	37,35,31,37
	[b=1.0;1.0]		755.0	0.58	0.19	4d14 2+2 d14	0.34	0.062+2d6/18	L=250	0.16	0.91	37,35,31,37
					M_P= 16	**X=386.0**	**Y=1556.0**					
Pilas.	Note	Stato	Quota	%Af	r. snell.	Armat. long.	verif.	ver.sis	Staffe	v V/T cls	v V/T acc	Rif. cmb
185	s=6,m=1	ok	135.0	0.58	0.34	4d14 2+2 d14	0.20	0.092+2d6/18	L=370	0.08	0.27	27,3,27,27
	[b=1.0;1.0]		505.0	0.58	0.34	4d14 2+2 d14	0.11	0.082+2d6/18	L=370	0.08	0.27	3,3,27,27
187	s=6,m=1	ok	505.0	0.58	0.14	4d14 2+2 d14	0.16	0.042+2d6/18	L=250	0.19	0.65	4,1,27,27
	[b=1.0;1.0]		755.0	0.58	0.14	4d14 2+2 d14	0.23	0.022+2d6/18	L=250	0.19	0.65	43,1,27,27
					M_P= 17	**X=726.0**	**Y=1556.0**					
Pilas.	Note	Stato	Quota	%Af	r. snell.	Armat. long.	verif.	ver.sis	Staffe	v V/T cls	v V/T acc	Rif. cmb
38	s=6,m=1	ok	135.0	0.58	0.41	4d14 2+2 d14	0.20	0.142+2d6/18	L=370	0.26	0.82	19,3,43,43
	[b=1.0;1.0]		505.0	0.58	0.41	4d14 2+2 d14	0.15	0.122+2d6/18	L=370	0.26	0.82	42,3,43,43
133	s=6,m=1	ok	505.0	0.58	0.24	4d14 2+2 d14	0.24	0.102+2d6/18	L=250	0.15	0.53	43,3,28,45
	[b=1.0;1.0]		755.0	0.58	0.24	4d14 2+2 d14	0.11	0.092+2d6/18	L=250	0.15	0.53	39,3,28,45
211	s=6,m=1	ok	755.0	0.58	0.23	4d14 2+2 d14	0.14	0.072+2d6/18	L=300	0.14	0.54	30,4,41,41
	[b=1.0;1.0]		1055.0	0.58	0.23	4d14 2+2 d14	0.25	0.052+2d6/18	L=300	0.14	0.54	43,4,41,41
					M_P= 18	**X=2088.0**	**Y=1556.0**					
Pilas.	Note	Stato	Quota	%Af	r. snell.	Armat. long.	verif.	ver.sis	Staffe	v V/T cls	v V/T acc	Rif. cmb

39	s=6,m=1	ok	135.0	0.58	0.40	4d14 2+2 d14	0.19	0.132+2d6/18	L=370	0.26	0.83	15,3,31,31
	[b=1.0;1.0]		505.0	0.58	0.40	4d14 2+2 d14	0.14	0.112+2d6/18	L=370	0.26	0.83	34,3,31,31
134	s=6,m=1	ok	505.0	0.58	0.24	4d14 2+2 d14	0.24	0.102+2d6/18	L=250	0.17	0.55	35,3,17,33
	[b=1.0;1.0]		755.0	0.58	0.24	4d14 2+2 d14	0.12	0.092+2d6/18	L=250	0.17	0.55	35,3,17,33
226	s=6,m=1	ok	755.0	0.58	0.23	4d14 2+2 d14	0.15	0.072+2d6/18	L=300	0.17	0.64	36,4,37,37
	[b=1.0;1.0]		1055.0	0.58	0.23	4d14 2+2 d14	0.25	0.052+2d6/18	L=300	0.17	0.64	37,4,37,37
					M_P= 19	**X=2380.0 Y=1556.0**						
Pilas.	Note	Stato	Quota	%Af	r. snell.	Armat. long.	verif.	ver.sis	Staffe	v V/T cls	v V/T acc	Rif. cmb
173	s=6,m=1	ok	-65.0	0.58	0.19	4d14 2+2 d14	0.09	0.102+2d6/18	L=200	0.06	0.19	3,3,37,37
	[b=1.0;1.0]		135.0	0.58	0.19	4d14 2+2 d14	0.08	0.092+2d6/18	L=200	0.06	0.19	3,3,37,37
204	s=6,m=1	ok	135.0	0.58	0.32	4d14 2+2 d14	0.17	0.092+2d6/18	L=370	0.08	0.30	15,3,23,23
	[b=1.0;1.0]		505.0	0.58	0.32	4d14 2+2 d14	0.09	0.072+2d6/18	L=370	0.08	0.30	3,3,23,23
205	s=6,m=1	ok	505.0	0.58	0.13	4d14 2+2 d14	0.19	0.032+2d6/18	L=250	0.15	0.55	37,1,29,29
	[b=1.0;1.0]		755.0	0.58	0.13	4d14 2+2 d14	0.23	0.022+2d6/18	L=250	0.15	0.55	37,1,29,29
					M_P= 20	**X=386.0 Y=1851.0**						
Pilas.	Note	Stato	Quota	%Af	r. snell.	Armat. long.	verif.	ver.sis	Staffe	v V/T cls	v V/T acc	Rif. cmb
236	s=6,m=1	ok	135.0	0.58	0.34	4d14 2+2 d14	0.21	0.092+2d6/18	L=370	0.10	0.33	27,3,30,26
	[b=1.0;1.0]		505.0	0.58	0.34	4d14 2+2 d14	0.11	0.082+2d6/18	L=370	0.10	0.33	42,3,30,26
237	s=6,m=1	ok	505.0	0.58	0.14	4d14 2+2 d14	0.08	0.042+2d6/18	L=250	0.15	0.49	45,3,27,27
	[b=1.0;1.0]		755.0	0.58	0.14	4d14 2+2 d14	0.16	0.022+2d6/18	L=250	0.15	0.49	43,3,27,27
					M_P= 21	**X=726.0 Y=1851.0**						
Pilas.	Note	Stato	Quota	%Af	r. snell.	Armat. long.	verif.	ver.sis	Staffe	v V/T cls	v V/T acc	Rif. cmb
44	s=6,m=1	ok	135.0	0.58	0.46	4d14 2+2 d14	0.22	0.172+2d6/18	L=370	0.15	0.51	27,4,27,43
	[b=1.0;1.0]		505.0	0.58	0.46	4d14 2+2 d14	0.15	0.152+2d6/18	L=370	0.15	0.51	4,4,27,43
139	s=6,m=1	ok	505.0	0.58	0.24	4d14 2+2 d14	0.17	0.102+2d6/18	L=250	0.14	0.44	43,4,21,21
	[b=1.0;1.0]		755.0	0.58	0.24	4d14 2+2 d14	0.13	0.092+2d6/18	L=250	0.14	0.44	29,4,21,21
232	s=6,m=1	ok	755.0	0.58	0.22	4d14 2+2 d14	0.17	0.062+2d6/18	L=300	0.14	0.53	43,1,41,41
	[b=1.0;1.0]		1055.0	0.58	0.22	4d14 2+2 d14	0.28	0.052+2d6/18	L=300	0.14	0.53	43,40,41,41
					M_P= 22	**X=2088.0 Y=1851.0**						
Pilas.	Note	Stato	Quota	%Af	r. snell.	Armat. long.	verif.	ver.sis	Staffe	v V/T cls	v V/T acc	Rif. cmb
45	s=6,m=1	ok	135.0	0.58	0.45	4d14 2+2 d14	0.22	0.162+2d6/18	L=370	0.17	0.56	31,4,31,37
	[b=1.0;1.0]		505.0	0.58	0.45	4d14 2+2 d14	0.15	0.142+2d6/18	L=370	0.17	0.56	37,4,31,37
140	s=6,m=1	ok	505.0	0.58	0.24	4d14 2+2 d14	0.16	0.102+2d6/18	L=250	0.15	0.48	31,4,17,17
	[b=1.0;1.0]		755.0	0.58	0.24	4d14 2+2 d14	0.12	0.092+2d6/18	L=250	0.15	0.48	17,4,17,17
233	s=6,m=1	ok	755.0	0.58	0.22	4d14 2+2 d14	0.16	0.062+2d6/18	L=300	0.13	0.53	31,1,45,45
	[b=1.0;1.0]		1055.0	0.58	0.22	4d14 2+2 d14	0.27	0.052+2d6/18	L=300	0.13	0.53	37,44,45,45
					M_P= 23	**X=2380.0 Y=1851.0**						
Pilas.	Note	Stato	Quota	%Af	r. snell.	Armat. long.	verif.	ver.sis	Staffe	v V/T cls	v V/T acc	Rif. cmb
114	s=6,m=1	ok	-65.0	0.58	0.19	4d14 2+2 d14	0.09	0.102+2d6/18	L=200	0.06	0.19	37,3,36,36
	[b=1.0;1.0]		135.0	0.58	0.19	4d14 2+2 d14	0.09	0.092+2d6/18	L=200	0.06	0.19	37,3,36,36
227	s=6,m=1	ok	135.0	0.58	0.32	4d14 2+2 d14	0.17	0.092+2d6/18	L=370	0.09	0.29	25,3,29,29
	[b=1.0;1.0]		505.0	0.58	0.32	4d14 2+2 d14	0.09	0.072+2d6/18	L=370	0.09	0.29	4,3,29,29
225	s=6,m=1	ok	505.0	0.58	0.13	4d14 2+2 d14	0.11	0.032+2d6/18	L=250	0.10	0.37	37,3,30,25
	[b=1.0;1.0]		755.0	0.58	0.13	4d14 2+2 d14	0.16	0.022+2d6/18	L=250	0.10	0.37	37,3,30,25
					M_P= 24	**X=386.0 Y=2237.0**						
Pilas.	Note	Stato	Quota	%Af	r. snell.	Armat. long.	verif.	ver.sis	Staffe	v V/T cls	v V/T acc	Rif. cmb
234	s=6,m=1	ok	135.0	0.58	0.48	4d14 2+2 d14	0.26	0.182+2d6/18	L=370	0.10	0.37	30,42,30,30
	[b=1.0;1.0]		505.0	0.58	0.48	4d14 2+2 d14	0.29	0.172+2d6/18	L=370	0.10	0.37	42,42,30,30
235	s=6,m=1	ok	505.0	0.58	0.20	4d14 2+2 d14	0.61	0.072+2d6/18	L=250	0.16	0.73	42,42,42,42
	[b=1.0;1.0]		755.0	0.58	0.20	4d14 2+2 d14	0.29	0.062+2d6/18	L=250	0.16	0.73	42,42,42,42
					M_P= 25	**X=726.0 Y=2237.0**						
Pilas.	Note	Stato	Quota	%Af	r. snell.	Armat. long.	verif.	ver.sis	Staffe	v V/T cls	v V/T acc	Rif. cmb
66	s=6,m=1	ok	135.0	0.58	0.46	4d14 2+2 d14	0.22	0.172+2d6/18	L=370	0.07	0.35	30,21,24,25
	[b=1.0;1.0]		505.0	0.58	0.46	4d14 2+2 d14	0.20	0.152+2d6/18	L=370	0.07	0.35	26,21,24,25
161	s=6,m=1	ok	505.0	0.58	0.24	4d14 2+2 d14	0.10	0.102+2d6/18	L=250	0.10	0.33	4,17,20,20
	[b=1.0;1.0]		755.0	0.58	0.24	4d14 2+2 d14	0.13	0.092+2d6/18	L=250	0.10	0.33	29,17,20,20
218	s=6,m=1	ok	755.0	0.58	0.19	4d14 2+2 d14	0.29	0.052+2d6/18	L=300	0.22	0.70	30,41,15,23
	[b=1.0;1.0]		1055.0	0.58	0.19	4d14 2+2 d14	0.25	0.042+2d6/18	L=300	0.22	0.70	43,41,15,23
					M_P= 26	**X=1066.0 Y=2237.0**						
Pilas.	Note	Stato	Quota	%Af	r. snell.	Armat. long.	verif.	ver.sis	Staffe	v V/T cls	v V/T acc	Rif. cmb
242	s=6,m=1	ok	135.0	0.58	0.49	4d14 2+2 d14	0.23	0.192+2d6/18	L=370	0.09	0.38	42,4,35,38
	[b=1.0;1.0]		505.0	0.58	0.49	4d14 2+2 d14	0.28	0.172+2d6/18	L=370	0.09	0.38	42,4,35,38
119	s=6,m=1	ok	505.0	0.58	0.31	4d14 2+2 d14	0.30	0.162+2d6/18	L=250	0.07	0.39	42,4,42,42
	[b=1.0;1.0]		755.0	0.58	0.31	4d14 2+2 d14	0.18	0.152+2d6/18	L=250	0.07	0.39	4,4,42,42
221	s=6,m=1	ok	755.0	0.58	0.32	4d14 2+2 d14	0.25	0.122+2d6/18	L=300	0.21	0.71	17,3,25,25
	[b=1.0;1.0]		1055.0	0.58	0.32	4d14 2+2 d14	0.40	0.112+2d6/18	L=300	0.21	0.71	41,3,25,25
					M_P= 27	**X=1406.0 Y=2237.0**						
Pilas.	Note	Stato	Quota	%Af	r. snell.	Armat. long.	verif.	ver.sis	Staffe	v V/T cls	v V/T acc	Rif. cmb
25	s=6,m=1	ok	135.0	0.58	0.53	4d14 2+2 d14	0.25	0.222+2d6/18	L=370	0.10	0.39	27,4,24,24
	[b=1.0;1.0]		505.0	0.58	0.53	4d14 2+2 d14	0.22	0.202+2d6/18	L=370	0.10	0.39	4,4,24,24
120	s=6,m=1	ok	505.0	0.58	0.31	4d14 2+2 d14	0.16	0.162+2d6/18	L=250	0.07	0.30	27,9,15,15
	[b=1.0;1.0]		755.0	0.58	0.31	4d14 2+2 d14	0.19	0.152+2d6/18	L=250	0.07	0.30	16,9,15,15
70	s=6,m=1	ok	755.0	0.58	0.32	4d14 2+2 d14	0.19	0.122+2d6/18	L=300	0.18	0.58	19,9,15,19
	[b=1.0;1.0]		1055.0	0.58	0.32	4d14 2+2 d14	0.31	0.112+2d6/18	L=300	0.18	0.58	33,9,15,19
					M_P= 28	**X=1746.0 Y=2237.0**						
Pilas.	Note	Stato	Quota	%Af	r. snell.	Armat. long.	verif.	ver.sis	Staffe	v V/T cls	v V/T acc	Rif. cmb
26	s=6,m=1	ok	135.0	0.58	0.53	4d14 2+2 d14	0.26	0.222+2d6/18	L=370	0.09	0.42	36,4,37,36

[b=1.0;1.0]		505.0	0.58	0.53	4d14 2+2 d14	0.29	0.202+2d6/18	L=370	0.09	0.42	36,4,37,36
121 s=6,m=1	ok	505.0	0.58	0.31	4d14 2+2 d14	0.29	0.162+2d6/18	L=250	0.08	0.35	38,4,21,40
[b=1.0;1.0]		755.0	0.58	0.31	4d14 2+2 d14	0.18	0.152+2d6/18	L=250	0.08	0.35	11,4,21,40
213 s=6,m=1	ok	755.0	0.58	0.32	4d14 2+2 d14	0.27	0.122+2d6/18	L=300	0.23	0.79	19,3,25,37
[b=1.0;1.0]		1055.0	0.58	0.32	4d14 2+2 d14	0.43	0.112+2d6/18	L=300	0.23	0.79	37,3,25,37
				M_P= 29	**X=2088.0**	**Y=2237.0**					
Pilas. Note	Stato	Quota	%Af	r. snell.	Armat. long.	verif.	ver.sis	Staffe	v V/T cls	v V/T acc	Rif. cmb
48 s=6,m=1	ok	135.0	0.58	0.46	4d14 2+2 d14	0.22	0.172+2d6/18	L=370	0.09	0.37	25,4,25,25
[b=1.0;1.0]		505.0	0.58	0.46	4d14 2+2 d14	0.17	0.152+2d6/18	L=370	0.09	0.37	25,4,25,25
143 s=6,m=1	ok	505.0	0.58	0.23	4d14 2+2 d14	0.11	0.092+2d6/18	L=250	0.10	0.31	4,9,20,40
[b=1.0;1.0]		755.0	0.58	0.23	4d14 2+2 d14	0.15	0.082+2d6/18	L=250	0.10	0.31	18,9,20,40
107 s=6,m=1	ok	755.0	0.58	0.19	4d14 2+2 d14	0.26	0.052+2d6/18	L=300	0.22	0.68	24,39,18,15
[b=1.0;1.0]		1055.0	0.58	0.19	4d14 2+2 d14	0.23	0.042+2d6/18	L=300	0.22	0.68	37,39,18,15
				M_P= 30	**X=2380.0**	**Y=2237.0**					
Pilas. Note	Stato	Quota	%Af	r. snell.	Armat. long.	verif.	ver.sis	Staffe	v V/T cls	v V/T acc	Rif. cmb
150 s=6,m=1	ok	-65.0	0.58	0.29	4d14 2+2 d14	0.32	0.222+2d6/18	L=200	0.16	0.73	24,4,24,24
[b=1.0;1.0]		135.0	0.58	0.29	4d14 2+2 d14	0.23	0.212+2d6/18	L=200	0.16	0.73	4,4,24,24
206 s=6,m=1	ok	135.0	0.58	0.48	4d14 2+2 d14	0.25	0.182+2d6/18	L=370	0.11	0.43	24,36,24,36
[b=1.0;1.0]		505.0	0.58	0.48	4d14 2+2 d14	0.28	0.172+2d6/18	L=370	0.11	0.43	36,36,24,36
224 s=6,m=1	ok	505.0	0.58	0.20	4d14 2+2 d14	0.61	0.072+2d6/18	L=250	0.16	0.72	36,36,36,36
[b=1.0;1.0]		755.0	0.58	0.20	4d14 2+2 d14	0.29	0.062+2d6/18	L=250	0.16	0.72	36,36,36,36

Pilas.	**%Af**	**r. snell.**	**verif.**	**ver.sis**	**v V/T cls**	**v V/T acc**
	0.58	0.55	0.76	0.23	0.26	0.93

						M_T= 28	**Z=505.0**	**P=15**	**P=30**			
Trave	Note	Pos.	%Af	Af inf.	Af. sup	Af long.	x/d	V N/M	V V/T cls	V V/T acc	Staffe	Rif. cmb
		cm									L=cm	
42	ok,ok	0.0	0.85	9.8	9.8	0.0	0.25	0.13	0.11	0.50	2d6/18 L=249	37,24,3
	s=10,m=1	295.0	0.85	9.8	9.8	0.0	0.25	0.38	0.13	0.78	2d6/18 L=249	37,25,4
						M_T= 29	**Z=505.0**	**P=25**	**P=29**			
Trave	Note	Pos.	%Af	Af inf.	Af. sup	Af long.	x/d	V N/M	V V/T cls	V V/T acc	Staffe	Rif. cmb
95	ok,ok	0.0	0.85	9.8	9.8	0.0	0.25	0.39	0.27	0.82	2d6/18 L=294	29,42,3
	s=10,m=1	340.0	0.85	9.8	9.8	0.0	0.25	0.23	0.27	0.70	2d6/18 L=294	28,42,4
79	ok,ok	0.0	0.85	9.8	9.8	0.0	0.25	0.42	0.32	0.85	2d6/18 L=294	26,44,3
	s=10,m=1	340.0	0.85	9.8	9.8	0.0	0.25	0.18	0.31	0.67	2d6/18 L=294	23,44,4
80	ok,ok	0.0	0.85	9.8	9.8	0.0	0.25	0.33	0.30	0.85	2d6/18 L=294	29,38,3
	s=10,m=1	340.0	0.85	9.8	9.8	0.0	0.25	0.26	0.29	0.67	2d6/18 L=294	28,36,4
81	ok,ok	0.0	0.85	9.8	9.8	0.0	0.25	0.38	0.30	0.84	2d6/18 L=294	26,42,3
	s=10,m=1	340.0	0.85	9.8	9.8	0.0	0.25	0.24	0.28	0.68	2d6/18 L=294	28,42,4
82	ok,ok	0.0	0.85	9.8	9.8	0.0	0.25	0.35	0.33	0.85	2d6/18 L=296	29,36,3
	s=10,m=1	342.0	0.85	9.8	9.8	0.0	0.25	0.23	0.34	0.68	2d6/18 L=296	24,36,4
43	ok,ok	0.0	0.85	9.8	9.8	0.0	0.25	0.42	0.30	0.77	2d6/18 L=292	26,36,3
	s=10,m=1	292.0	0.85	9.8	9.8	0.0	0.25	0.41	0.30	0.74	2d6/18 L=292	23,36,4
						M_T= 37	**Z=505.0**	**P=10**	**P=14**			
Trave	Note	Pos.	%Af	Af inf.	Af. sup	Af long.	x/d	V N/M	V V/T cls	V V/T acc	Staffe	Rif. cmb
72	ok,ok	0.0	0.85	9.8	9.8	0.0	0.25	0.35	0.31	0.83	2d6/18 L=294	18,43,3
	s=10,m=1	340.0	0.85	9.8	9.8	0.0	0.25	0.18	0.31	0.69	2d6/18 L=294	15,43,4
73	ok,ok	0.0	0.85	9.8	9.8	0.0	0.25	0.36	0.34	0.85	2d6/18 L=294	21,43,3
	s=10,m=1	340.0	0.85	9.8	9.8	0.0	0.25	0.14	0.33	0.67	2d6/18 L=294	16,43,4
208	ok,ok	0.0	0.85	9.8	9.8	0.0	0.25	0.31	0.29	0.85	2d6/18 L=294	3,41,3
	s=10,m=1	340.0	0.85	9.8	9.8	0.0	0.25	0.21	0.28	0.67	2d6/18 L=294	15,40,4
184	ok,ok	0.0	0.85	9.8	9.8	0.0	0.25	0.33	0.29	0.84	2d6/18 L=294	17,42,3
	s=10,m=1	340.0	0.85	9.8	9.8	0.0	0.25	0.17	0.29	0.68	2d6/18 L=294	16,40,4
76	ok,ok	0.0	0.85	9.8	9.8	0.0	0.25	0.29	0.35	0.84	2d6/18 L=296	18,37,3
	s=10,m=1	342.0	0.85	9.8	9.8	0.0	0.25	0.20	0.34	0.69	2d6/18 L=296	15,37,4
77	ok,ok	0.0	0.85	9.8	9.8	0.0	0.25	0.36	0.36	0.74	2d6/18 L=292	21,37,3
	s=10,m=1	292.0	0.85	9.8	9.8	0.0	0.25	0.35	0.35	0.77	2d6/18 L=292	20,31,4
						M_T= 38	**Z=505.0**	**P=10**	**P=25**			
Trave	Note	Pos.	%Af	Af inf.	Af. sup	Af long.	x/d	V N/M	V V/T cls	V V/T acc	Staffe	Rif. cmb
83	ok,ok	0.0	0.93	9.8	9.8	0.0	0.25	0.30	0.34	0.81	2d6/18 L=293	42,18,3
	s=12,m=1	385.0	0.93	9.8	9.8	0.0	0.25	0.19	0.33	0.86	2d6/18 L=293	4,18,4
84	ok,ok	0.0	0.93	9.8	9.8	0.0	0.25	0.28	0.18	0.81	2d6/18 L=295	3,27,3
	s=12,m=1	295.0	0.93	9.8	9.8	0.0	0.25	0.51	0.22	0.87	2d6/18 L=295	43,43,4
85	ok,ok	0.0	0.93	9.8	9.8	0.0	0.25	0.16	0.33	0.82	2d6/18 L=294	3,15,3
	s=12,m=1	386.0	0.93	9.8	9.8	0.0	0.25	0.28	0.34	0.86	2d6/18 L=294	43,15,4
						M_T= 39	**Z=505.0**	**P=14**	**P=29**			
Trave	Note	Pos.	%Af	Af inf.	Af. sup	Af long.	x/d	V N/M	V V/T cls	V V/T acc	Staffe	Rif. cmb
86	ok,ok	0.0	0.93	9.8	9.8	0.0	0.25	0.30	0.32	0.72	2d6/18 L=293	36,18,3
	s=12,m=1	385.0	0.93	9.8	9.8	0.0	0.25	0.18	0.32	0.76	2d6/18 L=293	37,18,4
87	ok,ok	0.0	0.93	9.8	9.8	0.0	0.25	0.24	0.16	0.71	2d6/18 L=295	3,23,3
	s=12,m=1	295.0	0.93	9.8	9.8	0.0	0.25	0.50	0.19	0.78	2d6/18 L=295	37,35,4
88	ok,ok	0.0	0.93	9.8	9.8	0.0	0.25	0.14	0.34	0.72	2d6/18 L=294	36,15,3
	s=12,m=1	386.0	0.93	9.8	9.8	0.0	0.25	0.27	0.35	0.76	2d6/18 L=294	37,15,4
						M_T= 41	**Z=505.0**	**P=16**	**P=24**			

Trave	Note	Pos.	%Af	Af inf.	Af. sup	Af long.	x/d	V N/M	V V/T cls	V V/T acc	Staffe	Rif. cmb
91	ok,ok	0.0	0.85	9.8	9.8	0.0	0.25	0.15	0.13	0.57	2d6/18 L=249	42,30,3
	s=10,m=1	295.0	0.85	9.8	9.8	0.0	0.25	0.41	0.14	0.88	2d6/18 L=249	43,27,4
							M_T= 43	**Z=755.0**	**P=9**	**P=24**		
Trave	Note	Pos.	%Af	Af inf.	Af. sup	Af long.	x/d	V N/M	V V/T cls	V V/T acc	Staffe	Rif. cmb
158	ok,ok	0.0	0.85	9.8	9.8	0.0	0.25	0.11	0.37	0.51	2d6/18 L=339	42,28,1
	s=10,m=1	385.0	0.85	9.8	9.8	0.0	0.25	0.31	0.39	0.67	2d6/18 L=339	43,28,4
186	ok,ok	0.0	0.85	9.8	9.8	0.0	0.25	0.11	0.08	0.37	2d6/18 L=249	42,30,42
	s=10,m=1	295.0	0.85	9.8	9.8	0.0	0.25	0.29	0.09	0.54	2d6/18 L=249	43,27,4
93	ok,ok	0.0	0.85	9.8	9.8	0.0	0.25	0.13	0.34	0.47	2d6/18 L=340	42,23,1
	s=10,m=1	386.0	0.85	9.8	9.8	0.0	0.25	0.37	0.37	0.72	2d6/18 L=340	4,23,4
							M_T= 55	**Z=755.0**	**P=15**	**P=30**		
Trave	Note	Pos.	%Af	Af inf.	Af. sup	Af long.	x/d	V N/M	V V/T cls	V V/T acc	Staffe	Rif. cmb
193	ok,ok	0.0	0.85	9.8	9.8	0.0	0.25	0.11	0.34	0.46	2d6/18 L=339	36,26,1
	s=10,m=1	385.0	0.85	9.8	9.8	0.0	0.25	0.29	0.36	0.61	2d6/18 L=339	37,26,4
137	ok,ok	0.0	0.85	9.8	9.8	0.0	0.25	0.12	0.08	0.36	2d6/18 L=249	36,28,36
	s=10,m=1	295.0	0.85	9.8	9.8	0.0	0.25	0.29	0.09	0.50	2d6/18 L=249	31,29,37
194	ok,ok	0.0	0.85	9.8	9.8	0.0	0.25	0.14	0.32	0.43	2d6/18 L=340	36,21,1
	s=10,m=1	386.0	0.85	9.8	9.8	0.0	0.25	0.33	0.35	0.64	2d6/18 L=340	37,29,4
							M_T= 56	**Z=755.0**	**P=25**	**P=29**		
Trave	Note	Pos.	%Af	Af inf.	Af. sup	Af long.	x/d	V N/M	V V/T cls	V V/T acc	Staffe	Rif. cmb
190	ok,ok	0.0	0.85	9.8	9.8	0.0	0.25	0.28	0.27	0.50	2d6/18 L=294	21,38,3
	s=10,m=1	340.0	0.85	9.8	9.8	0.0	0.25	0.17	0.27	0.43	2d6/18 L=294	20,40,9
174	ok,ok	0.0	0.85	9.8	9.8	0.0	0.25	0.32	0.16	0.51	2d6/18 L=294	17,25,1
	s=10,m=1	340.0	0.85	9.8	9.8	0.0	0.25	0.14	0.14	0.43	2d6/18 L=294	24,19,16
175	ok,ok	0.0	0.85	9.8	9.8	0.0	0.25	0.25	0.12	0.52	2d6/18 L=294	22,33,17
	s=10,m=1	340.0	0.85	9.8	9.8	0.0	0.25	0.26	0.11	0.45	2d6/18 L=294	16,23,16
176	ok,ok	0.0	0.85	9.8	9.8	0.0	0.25	0.37	0.15	0.54	2d6/18 L=294	22,25,17
	s=10,m=1	340.0	0.85	9.8	9.8	0.0	0.25	0.16	0.11	0.47	2d6/18 L=294	16,27,16
177	ok,ok	0.0	0.85	9.8	9.8	0.0	0.25	0.27	0.15	0.50	2d6/18 L=296	17,3,3
	s=10,m=1	342.0	0.85	9.8	9.8	0.0	0.25	0.21	0.16	0.45	2d6/18 L=296	19,23,16
138	ok,ok	0.0	0.85	9.8	9.8	0.0	0.25	0.28	0.32	0.50	2d6/18 L=292	18,36,18
	s=10,m=1	292.0	0.85	9.8	9.8	0.0	0.25	0.30	0.32	0.51	2d6/18 L=292	15,36,15
							M_T= 64	**Z=755.0**	**P=9**	**P=15**		
Trave	Note	Pos.	%Af	Af inf.	Af. sup	Af long.	x/d	V N/M	V V/T cls	V V/T acc	Staffe	Rif. cmb
167	ok,ok	0.0	0.85	9.8	9.8	0.0	0.25	0.28	0.30	0.50	2d6/18 L=294	18,43,3
	s=10,m=1	340.0	0.85	9.8	9.8	0.0	0.25	0.17	0.31	0.44	2d6/18 L=294	15,43,15
168	ok,ok	0.0	0.85	9.8	9.8	0.0	0.25	0.35	0.16	0.52	2d6/18 L=294	21,28,1
	s=10,m=1	340.0	0.85	9.8	9.8	0.0	0.25	0.15	0.18	0.44	2d6/18 L=294	20,28,20
169	ok,ok	0.0	0.85	9.8	9.8	0.0	0.25	0.27	0.13	0.53	2d6/18 L=294	21,26,18
	s=10,m=1	340.0	0.85	9.8	9.8	0.0	0.25	0.29	0.14	0.47	2d6/18 L=294	15,28,15
170	ok,ok	0.0	0.85	9.8	9.8	0.0	0.25	0.41	0.12	0.55	2d6/18 L=294	21,29,18
	s=10,m=1	340.0	0.85	9.8	9.8	0.0	0.25	0.17	0.10	0.49	2d6/18 L=294	15,15,15
171	ok,ok	0.0	0.85	9.8	9.8	0.0	0.25	0.29	0.18	0.51	2d6/18 L=296	18,26,18
	s=10,m=1	342.0	0.85	9.8	9.8	0.0	0.25	0.24	0.14	0.47	2d6/18 L=296	15,20,15
172	ok,ok	0.0	0.85	9.8	9.8	0.0	0.25	0.28	0.35	0.50	2d6/18 L=292	21,37,21
	s=10,m=1	292.0	0.85	9.8	9.8	0.0	0.25	0.34	0.35	0.54	2d6/18 L=292	20,31,20
							M_T= 65	**Z=755.0**	**P=10**	**P=25**		
Trave	Note	Pos.	%Af	Af inf.	Af. sup	Af long.	x/d	V N/M	V V/T cls	V V/T acc	Staffe	Rif. cmb
178	ok,ok	0.0	0.93	9.8	9.8	0.0	0.25	0.18	0.32	0.47	2d6/18 L=293	42,16,1
	s=12,m=1	385.0	0.93	9.8	9.8	0.0	0.25	0.17	0.32	0.52	2d6/18 L=293	43,19,4
179	ok,ok	0.0	0.93	9.8	9.8	0.0	0.25	0.28	0.11	0.54	2d6/18 L=295	42,40,42
	s=12,m=1	295.0	0.93	9.8	9.8	0.0	0.25	0.44	0.12	0.61	2d6/18 L=295	43,43,43
180	ok,ok	0.0	0.93	9.8	9.8	0.0	0.25	0.19	0.31	0.48	2d6/18 L=294	38,15,1
	s=12,m=1	386.0	0.93	9.8	9.8	0.0	0.25	0.22	0.33	0.52	2d6/18 L=294	41,15,4
							M_T= 66	**Z=755.0**	**P=14**	**P=29**		
Trave	Note	Pos.	%Af	Af inf.	Af. sup	Af long.	x/d	V N/M	V V/T cls	V V/T acc	Staffe	Rif. cmb
181	ok,ok	0.0	0.93	9.8	9.8	0.0	0.25	0.16	0.31	0.43	2d6/18 L=293	36,16,1
	s=12,m=1	385.0	0.93	9.8	9.8	0.0	0.25	0.16	0.31	0.47	2d6/18 L=293	37,16,4
182	ok,ok	0.0	0.93	9.8	9.8	0.0	0.25	0.27	0.11	0.52	2d6/18 L=295	36,44,36
	s=12,m=1	295.0	0.93	9.8	9.8	0.0	0.25	0.44	0.11	0.57	2d6/18 L=295	37,45,37
183	ok,ok	0.0	0.93	9.8	9.8	0.0	0.25	0.18	0.32	0.43	2d6/18 L=294	42,16,1
	s=12,m=1	386.0	0.93	9.8	9.8	0.0	0.25	0.22	0.31	0.47	2d6/18 L=294	37,16,4
							M_T= 44	**Z=1055.0**	**P=10**	**P=25**		
Trave	Note	Pos.	%Af	Af inf.	Af. sup	Af long.	x/d	V N/M	V V/T cls	V V/T acc	Staffe	Rif. cmb
165	ok,ok	0.0	0.24	9.8	9.8	0.0	0.11	0.27	0.22	0.25	2d6/18 L=293	38,16,42
	s=19,m=1	385.0	0.24	9.8	9.8	0.0	0.11	0.19	0.24	0.35	2d6/18 L=293	18,16,43
94	ok,ok	0.0	0.24	9.8	9.8	0.0	0.11	0.20	0.06	0.23	2d6/18 L=295	21,35,4
	s=19,m=1	295.0	0.24	9.8	9.8	0.0	0.11	0.20	0.06	0.20	2d6/18 L=295	21,35,1
160	ok,ok	0.0	0.24	9.8	9.8	0.0	0.11	0.19	0.26	0.34	2d6/18 L=294	22,20,40
	s=19,m=1	386.0	0.24	9.8	9.8	0.0	0.11	0.25	0.23	0.30	2d6/18 L=294	21,20,43
							M_T= 50	**Z=1055.0**	**P=10**	**P=14**		
Trave	Note	Pos.	%Af	Af inf.	Af. sup	Af long.	x/d	V N/M	V V/T cls	V V/T acc	Staffe	Rif. cmb
108	ok,ok	0.0	0.71	9.8	9.8	0.0	0.21	0.46	0.32	0.36	2d6/18 L=294	21,1,21
	s=18,m=1	340.0	0.71	9.8	9.8	0.0	0.21	0.27	0.33	0.40	2d6/18 L=294	21,1,20
109	ok,ok	0.0	0.71	9.8	9.8	0.0	0.21	0.28	0.10	0.25	2d6/18 L=294	15,18,18
	s=18,m=1	340.0	0.71	9.8	9.8	0.0	0.21	0.25	0.12	0.37	2d6/18 L=294	15,20,15

110	ok,ok	0.0	0.71	9.8	9.8	0.0	0.21	0.28	0.10	0.27	2d6/18	L=294 20,18,18
	s=18,m=1	340.0	0.71	9.8	9.8	0.0	0.21	0.26	0.12	0.39	2d6/18	L=294 20,28,15
164	ok,ok	0.0	0.71	9.8	9.8	0.0	0.21	0.38	0.32	0.33	2d6/18	L=296 15,1,18
	s=18,m=1	342.0	0.71	9.8	9.8	0.0	0.21	0.38	0.34	0.45	2d6/18	L=296 20,1,15
							M_T= 57	**Z=1055.0**	**P=14**	**P=29**		
Trave	Note	Pos.	%Af	Af inf.	Af. sup	Af long.	x/d	V N/M	V V/T cls	V V/T acc	Staffe	Rif. cmb
142	ok,ok	0.0	0.24	9.8	9.8	0.0	0.11	0.31	0.23	0.27	2d6/18	L=293 34,16,34
	s=19,m=1	385.0	0.24	9.8	9.8	0.0	0.11	0.15	0.26	0.36	2d6/18	L=293 22,19,31
144	ok,ok	0.0	0.24	9.8	9.8	0.0	0.11	0.19	0.06	0.23	2d6/18	L=295 21,44,4
	s=19,m=1	295.0	0.24	9.8	9.8	0.0	0.11	0.17	0.06	0.20	2d6/18	L=295 21,35,1
145	ok,ok	0.0	0.24	9.8	9.8	0.0	0.11	0.17	0.27	0.35	2d6/18	L=294 18,20,44
	s=19,m=1	386.0	0.24	9.8	9.8	0.0	0.11	0.32	0.23	0.30	2d6/18	L=294 29,20,45
							M_T= 63	**Z=1055.0**	**P=25**	**P=29**		
Trave	Note	Pos.	%Af	Af inf.	Af. sup	Af long.	x/d	V N/M	V V/T cls	V V/T acc	Staffe	Rif. cmb
219	ok,ok	0.0	0.71	9.8	9.8	0.0	0.21	0.45	0.33	0.34	2d6/18	L=294 22,3,17
	s=18,m=1	340.0	0.71	9.8	9.8	0.0	0.21	0.26	0.34	0.38	2d6/18	L=294 22,4,16
212	ok,ok	0.0	0.71	9.8	9.8	0.0	0.21	0.26	0.09	0.24	2d6/18	L=294 16,17,17
	s=18,m=1	340.0	0.71	9.8	9.8	0.0	0.21	0.24	0.11	0.36	2d6/18	L=294 16,27,16
200	ok,ok	0.0	0.71	9.8	9.8	0.0	0.21	0.26	0.09	0.26	2d6/18	L=294 19,37,17
	s=18,m=1	340.0	0.71	9.8	9.8	0.0	0.21	0.25	0.11	0.37	2d6/18	L=294 19,19,16
159	ok,ok	0.0	0.71	9.8	9.8	0.0	0.21	0.37	0.33	0.31	2d6/18	L=296 19,3,17
	s=18,m=1	342.0	0.71	9.8	9.8	0.0	0.21	0.37	0.35	0.42	2d6/18	L=296 19,3,16

Trave	**%Af**	**Af inf.**	**Af. sup**	**Af long.**	**x/d**	**V N/M**	**V V/T cls**	**V V/T acc**
	0.93	9.80	9.80	0.0	0.25	0.51	0.39	0.88